STOCHASTIC ERROR ANALYSIS OF CAM MECHANISMS

STOCHASTIC ANALYSIS OF MANUFACTURING ERRORS IN CAM MECHANISMS

by

Ho-Ryong Kim

A Thesis

Submitted to the School of Graduate Studies

in Partial Fulfilment of the Requirements

for the Degree

Master of Engineering

McMaster University

October, 1977

©Ho-Ryong Kim

MASTER OF ENGINEERING
(Mechanical Design)

McMASTER UNIVERSITY
Hamilton, Ontario

TITLE : Stochastic Analysis of Manufacturing Errors in Cam Mechanisms

AUTHOR : Ho-Ryong Kim, B.Eng.(Yon Sei University, Seoul, Korea)

SUPERVISOR : Professor W. R. Newcombe

NUMBER OF PAGES : vii; 196

"STOCHASTIC ANALYSIS OF MANUFACTURING ERRORS IN CAM MECHANISMS"

Abstract:

A realistic relationship between cam and follower motion is developed taking into full account the effect of manufacturing errors as defined by the specified error bound of the tolerances and clearances. Probability theory is used, and a general computer program has been developed to obtain the motion relationships and the effects of these equal errors on the standard cam motion programs are compared.

ACKNOWLEDGMENTS

It is a pleasant duty to acknowledge the co-operation of all those people who helped make this work possible. In particular, I would like to thank Professor W. R. Newcombe for suggesting the problem, and for his expert guidance and encouragement throughout.

Financial assistance from the National Research Council of Canada is gratefully acknowledged.

And a last word of thanks goes to Mrs. Joshi for her cool efficiency in typing the manuscript.

TABLE OF CONTENTS

		Page
Title of the Project		
Abstract		
Chapter I.	Introduction	1
1.1	Cam Mechanism	1
1.2	Cam and follower systems	2
1.3	Cam Geometry	13
1.4	Displacement Curves of Cams	15
1.5	Objectives	33
Chapter II.	Error Analysis of Cam-Follower Systems: Stochastic Approach	37
2.1	Literature Review	37
2.2	Input Errors as Random Variables	39
2.3	Probabilistic Model of Cam Mechanism	42
2.4	Analysis of Cam Mechanism (Two Dimension)	51
Chapter III.	Stochastic Analysis of Velocity and Acceleration	68
3.1	Introduction	68
3.2	Finite Differences Method	70
3.3	Maximum Likelyhood Estimation Method	74

Chapter IV Application to Two Dimensional Cam Mechanism 83
4.1 Introduction 83
4.2 Flat Faced Follower 89
4.3 Translating In-Line Roller Follower 95
4.4 Translating Offset Roller Follower 110
4.5 Oscillating Roller Follower 123
Chapter V Discussion and Recommendation 138
5.1 Conclusions 138
5.2 Recommendation 140
References 143
Appendices
Appendix A : Follower Surfaces 148
A.1 : Spherical Follower 148
A.2 : Globoidal Follower 149
A.3 : Conical Follower 149
A.4 : Cylindrical Follower 152
Appendix B : Analysis of Cam Mechanism (Three Dimension) 153
B.1 : Cylindrical Cam with Translating Offset Follower 153
B.2 : Cylindrical Cam with Oscillating Follower 157
B.3 : Globoidal Cam 160
B.4 : Camoids 163

Appendix C : Program User's Information 168
C.1 : How to Use 168
C.2 : Routine Description 174
Appendix D : Program Listing 177

CHAPTER I

INTRODUCTION

1.1 Cam Mechanism

A mechanism is a device that transforms one motion into another; for example the rotation of a driving shaft into a different rotation or oscillation of an output shaft.

A mechanism is an assembly of rigid or resistent bodies connected together for the purpose of transforming motion. Of the immense variety of mechanisms, various classifications can be made; the most convenient is that based on the nature of connections. The connection of two members by means of a pivot or a slider is known as a lower paring which provides surface control. All other types of connections, such as the contact between a cam profile and a follower, are known as higher pairing which consists of line or point contact. [1]

Many of today's machines require components to move in a prescribed exact path. Bar type of linkages alone can not always accomplish this demand. It is accordingly necessary to resort to the use of various contour surfaces called cams. As the cam may have any shape, it is simple and adaptable. Moreover,

among the fundamental kinematic linkages the cam has the virtue of being easy to design if properly understood, and the action produced by it can be most accurately forecast. "A cam is a mechanical member for transmitting a desired motion to a follower by direct contact". The driver is called a cam, and the driven member is called the follower. The cam may remain stationary or oscillate, translate, or rotate, where as the follower may translate or oscillate.

Cams are used in a wide variety of machines; such as textile, packaging, machine tools, cam making industry, printing, wire-forming machines, engines, switches, ejection molds, computing mechanisms, and mechanical and electronic computers. One important reason why cam mechanisms are prefered over other types is that the use of cams makes it possible to obtain an unlimited variety of motions and when certain basic requirements are followed, cams perform satisfactorily year after year.[2]

The basic design parameters for a cam mechanism are: type of time-displacement diagram, pressure angle, radius of curvature, and the contact pressure between the follower and the cam.

1.2 Cam and Follower Systems

Kinematically speaking, in its general form, the plain cam mechanism (Figure 1.2-1a) consists of two shaped members, A and B, connected by a fixed third body C. Either body A or

body B may be the driver with the other the follower. We may at each instant replace these shaped bodies by an equivalent mechanism having members as shown in Figure 1.2-1b. At any other instant, the contact point between 1 and 2 changes and the links of the equivalent mechanisms have different lengths.

1. Some Types of Cams

Cams can be classified by (1) physical shape, and (2) the motion of the follower. [3]

(1) Physical Shape

a) Disk or Plate Cam (Figure 1.2-2a and b)

The disk or plate cam has an irregular contour to impart a specific motion to the follower. The follower moves in a plane perpendicular to the axis of rotation of the camshaft and is held in contact with the cam by springs or gravity.

Since the motion of the follower is radial to the axis of the camshaft, the disk cam is also called the radial cam. The radial cam is by far the most popular because of its simplicity and compactness.

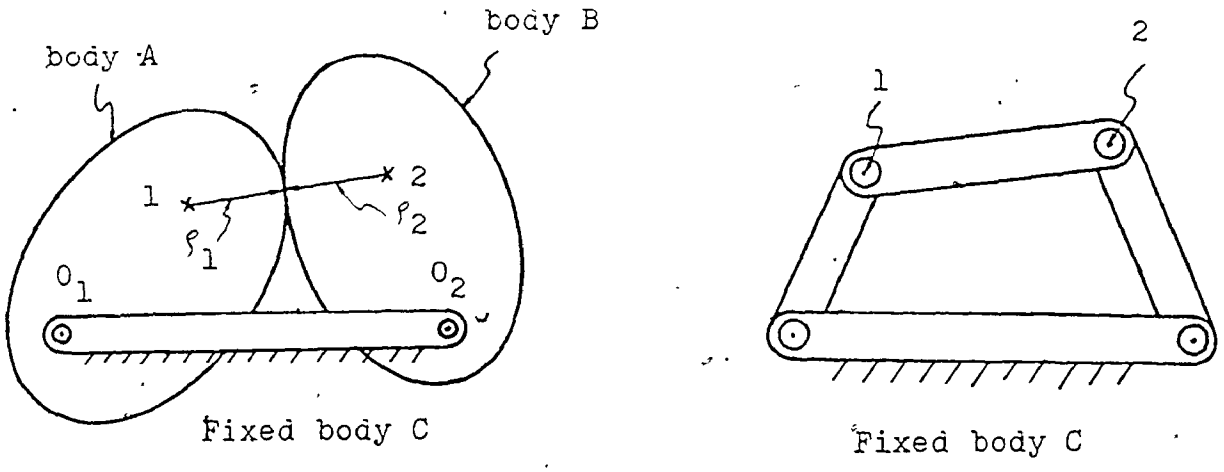

(a) General Form

(b) Kinematically Equivalent Mechanism

Figure 1.2-1 Generalized Cam Mechanism (Two Shaped Bodies in Contact) [2]

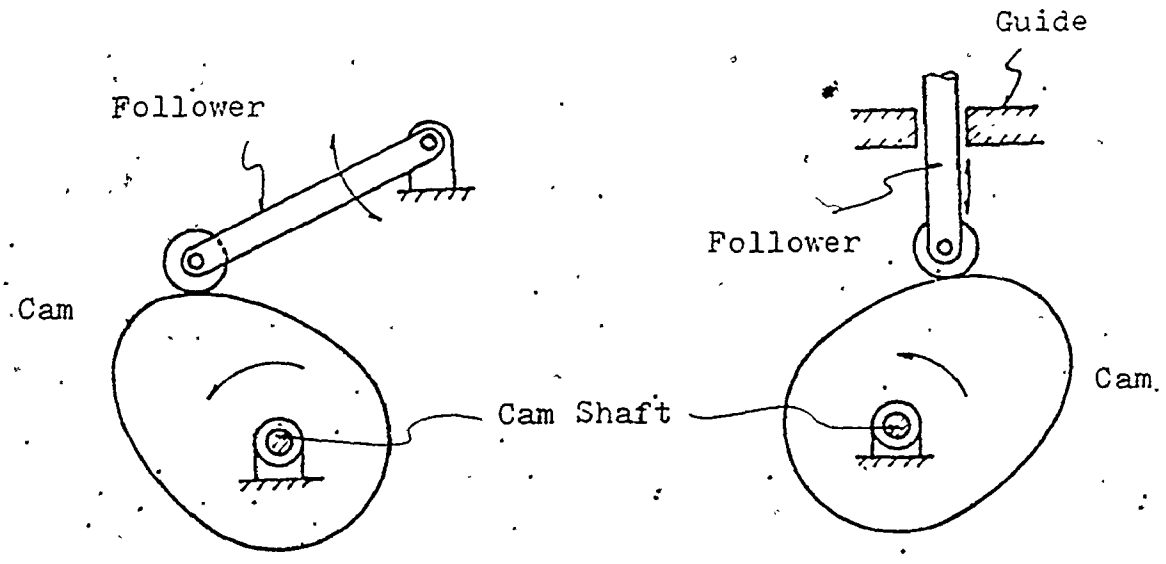

(a) (b)

Figure 1.2-2 Plate or Disk Cams

b) Cylindrical Cam (Figure 1.2-3)

The cylindrical cam has a groove cut along its cylindrical surface. The roller follows the groove, and the follower moves in a plane parallel to the axis of the rotation of the cylinder.

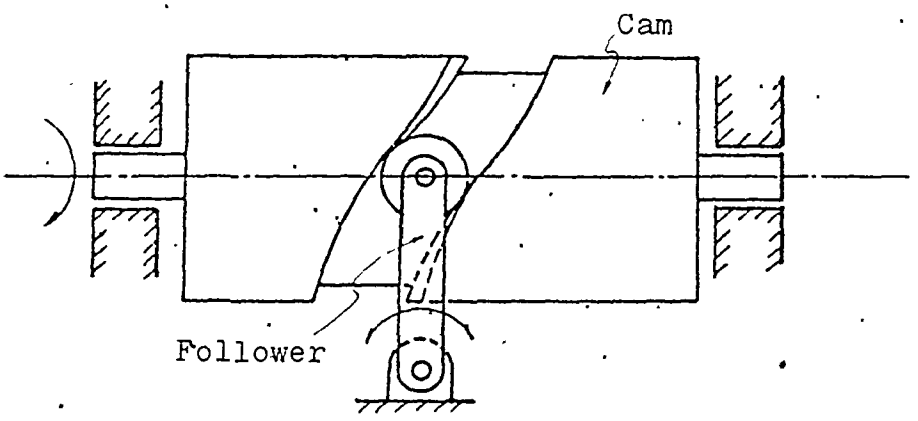

Figure 1.2-3 Cylindrical Cam[3]

c) Translating Cam (Figure 1.2-4a and b)

The translating cam is contoured or grooved plate sliding on a guiding surfaces. The follower may oscillate (Figure 1.2-4a) or reciprocate (Figure 1.2-4b). The contour or the shape of the groove is determined by the specified motion of the follower.

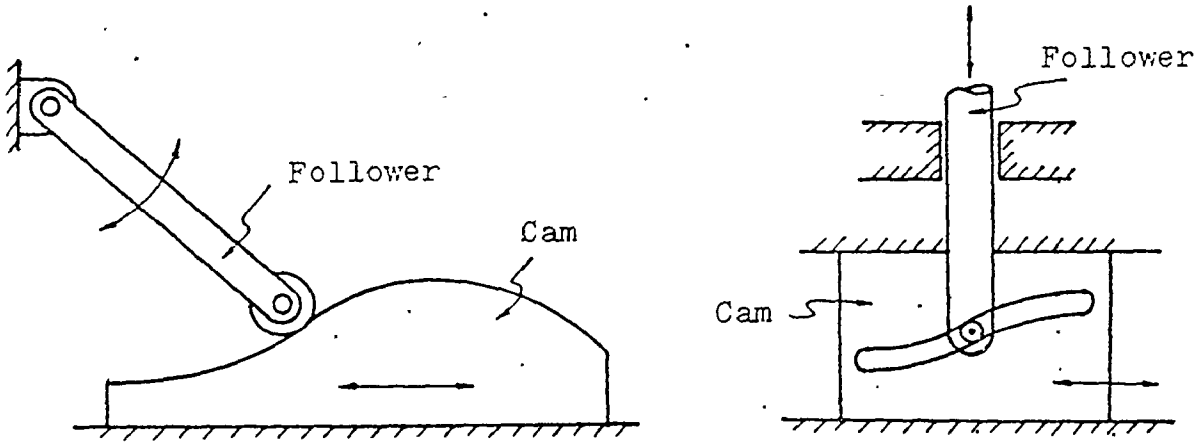

(a) (b)

Figure 1.2-4 Translating Cams

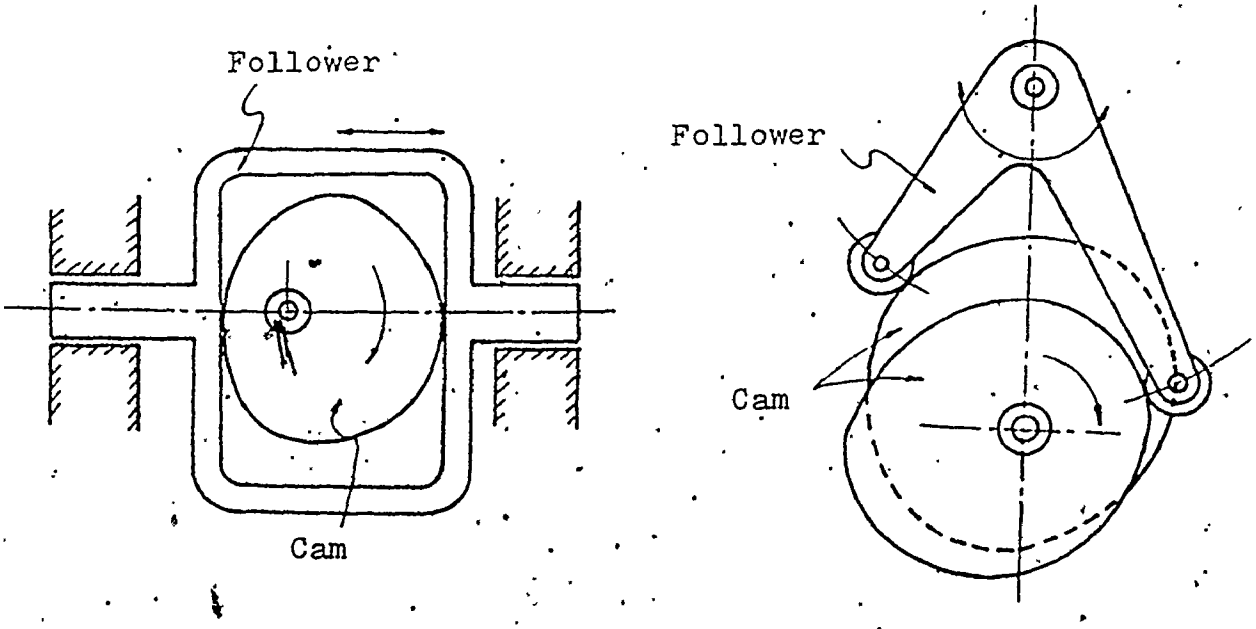

(a) Yoke Cam (b) Dual Cam

Figure 1.2-5 Positive Acting Cams [2,3]

d) Positive-Acting Cam (Figure 1.2-5a and b)

The yoke cam (Figure 1.2-5a) is a positive acting cam. The follower encloses the cam within two contact surfaces which are separated by a constant distance. The dual cam shown in Figure 1.2-5b, rotate together on the cam shaft. The bell crank-shaped oscillating follower has two rollers, one on each arm. Each of the two cams is always in contact with its own follower roller. Thus, the driven follower can not fly off. (Dual cams are called conjugate cams.)

(2) Follower Motions

The motion of a cam follower is expressed by the displacement-time diagram. The time it takes the cam to make one revolution is the time the cam follower takes to complete a cycle of operation. The displacement of the cam follower depends on the contour of the cam. Therefore, cams can be classified by the displacement-time diagram of the follower. [3]

a) Rise-Return-Rise Cam (Figure 1.2-6)

This type of cam moves the cam follower to the maximum displacement during the first part of the cycle (rise), and returns the follower to its starting position during the second part of the cycle (return). The designation of this type of cam is R-R-R (Rise-Return-Rise).

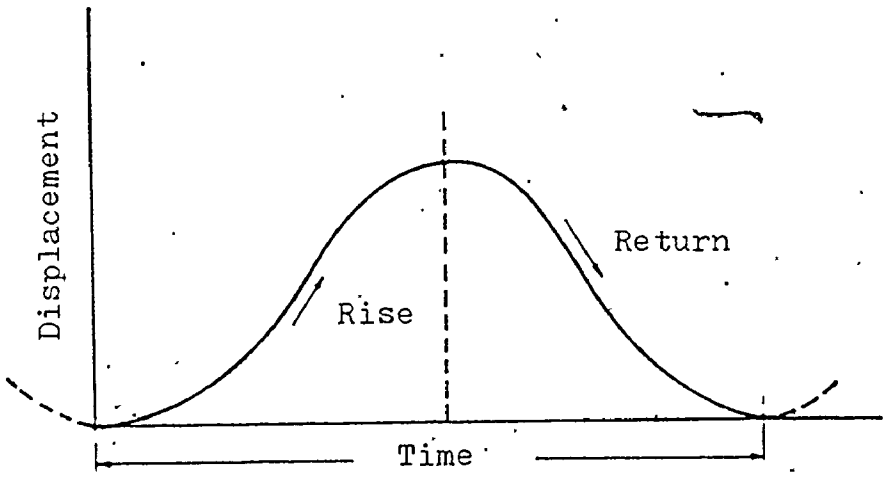

Figure 1.2-6 Rise-Return-Rise Motion [3]

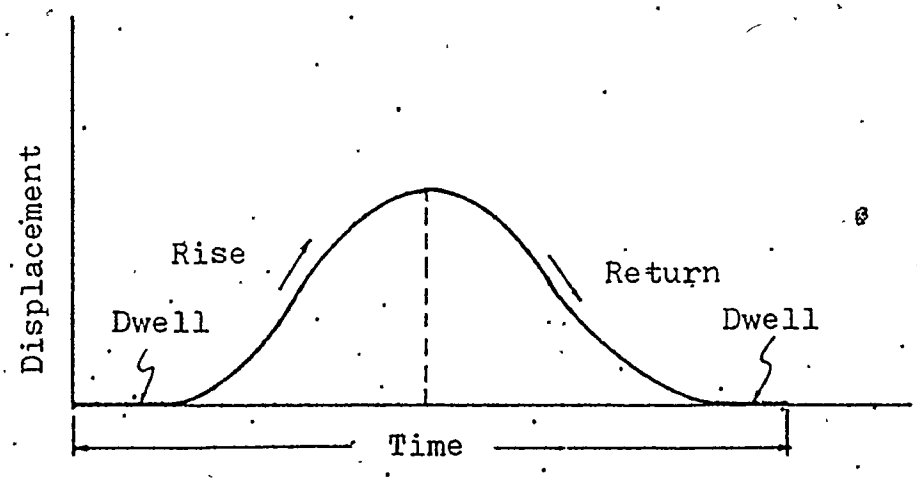

Figure 1.2-7 Dwell-Rise-Return-Dwell Motion [3]

b) Dwell-Rise-Return-Dwell Cam (Figure 1.2-7)

The portion of the rotating cam that does not impart displacement to the follower is called "dwell". For a dwell-rise-return-dwell cam (D-R-R-D), the rise and return are preceeded and followed by dwells.

c) Dwell-Rise-Dwell Cam (Figure 1.2-8)

This is one of the most common cam motions, and the rise-dwell is followed by a return-dwell stroke after which the cycle is repeated.

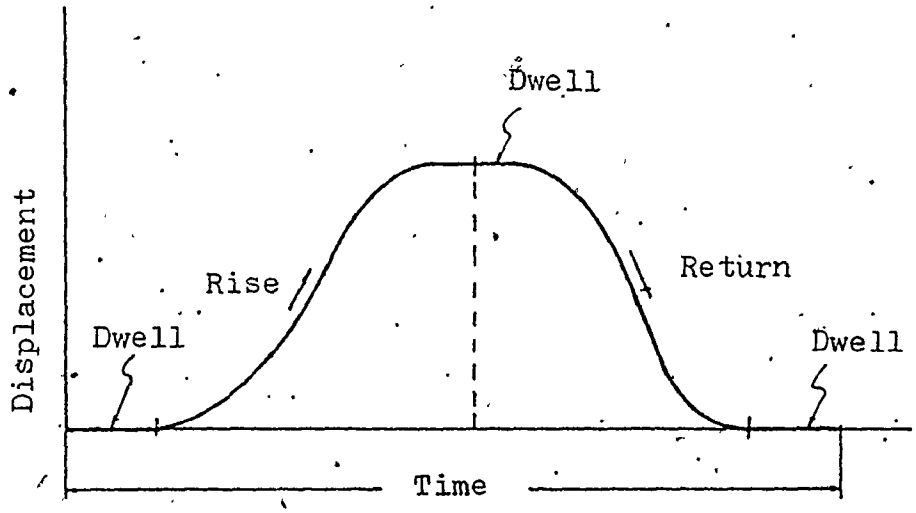

Figure 1.2-8 Dwell-Rise-Dwell Motion [3]

2. Type of Cam Followers

Cam followers may be classified by (1) the line of movement relative to the camshaft and (2) the contact surfaces between the cam and the follower.

(1) Line of Movement

a) In-line Cam Followers

The lines of the movement of In-line cam followers pass through the centers of the camshafts (Figure 1.2-9a, b, c and d).

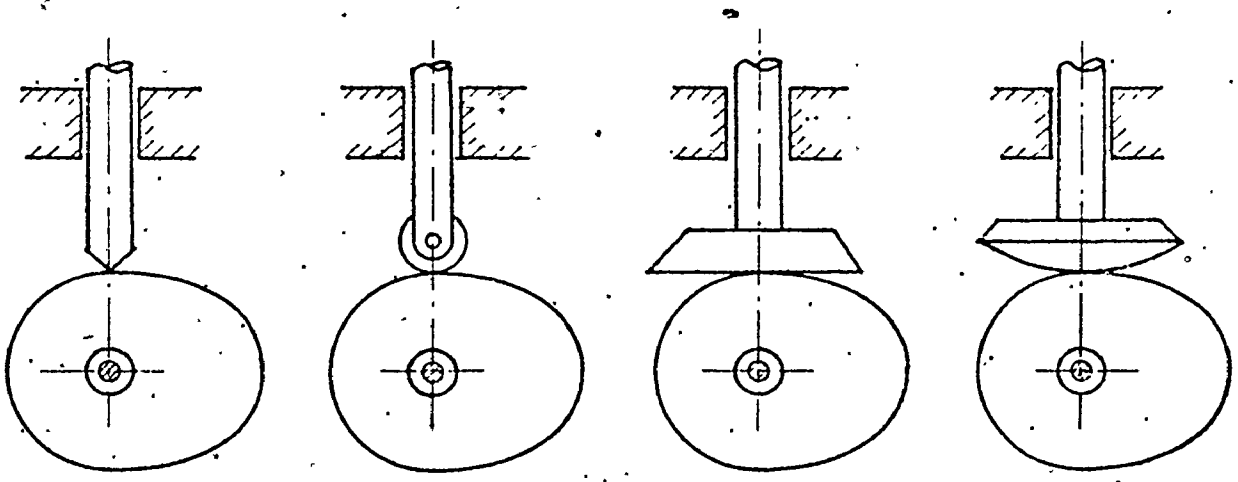

(a) (b) (c) (d)

Figure 1.2-9 In-line Cam Followers [3]

b) Offset Cam Followers

For this type, the lines of movement are offset from the centers of the camshafts (Figure 1.2-10a, b, c and d).

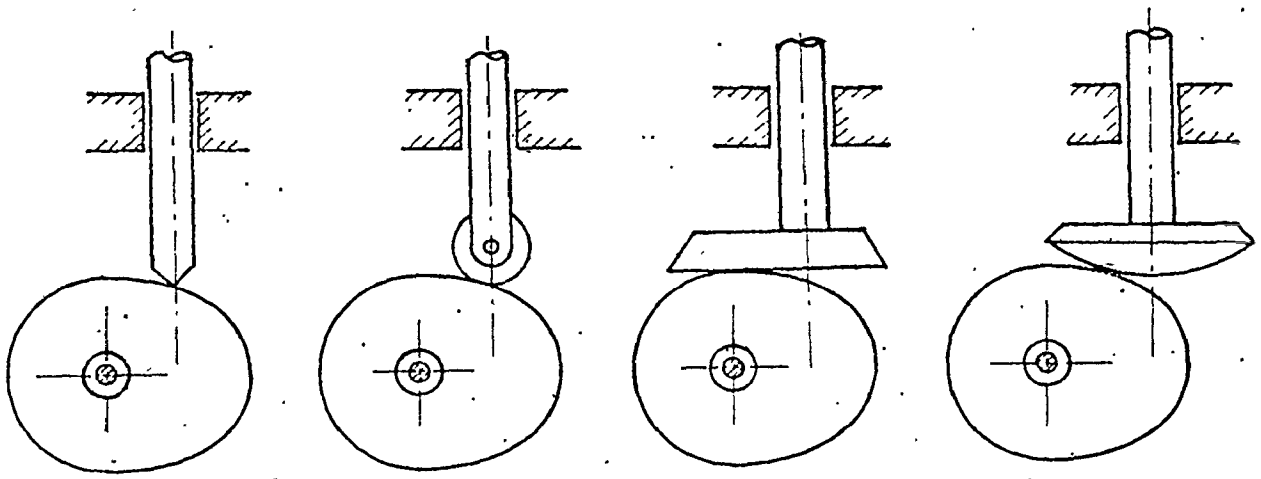

(a) (b) (c) (d)

Figure 1.2-10 Offset Cam Follower [3]

c) Pivoted Cam Followers

This type of cam follower swings in an arc about the pivot (Figure 1.2-11a and b).

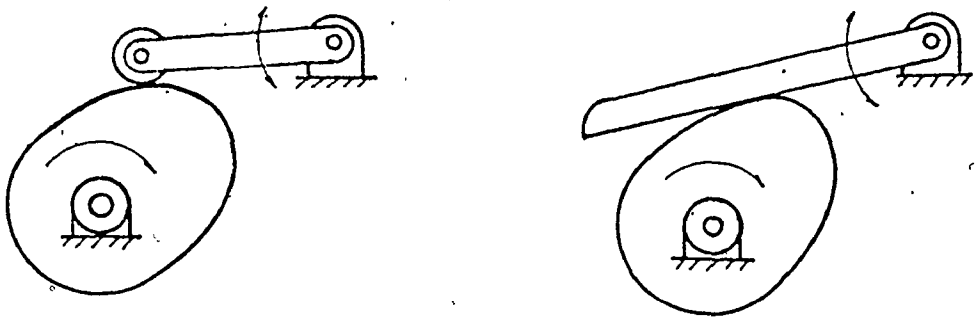

(a) (b)

Figure 1.2-11 Pivoted Arm Followers

(2) Contact Surfaces

a) Knife-Edge Follower (Figure 1.2-9a and 10a)

This type of cam follower has a sharp knife-edge in contact with the cam. The exessive wear at the contact line eliminates its practical values. However, it is used to illustrate the theory of cams.

b) Roller Follower (Figure 1.2-9b, 10b and 11a)

A roller follows the cam contour. This type is used most frequently because it minimizes wear at the point of contact.

c) Flat Face Follower (Figure 1.2-9c, 10c and 11b)

A flat surface is in contact with the cam.

d) Spherical-Face Follower (Figure 1.2-9d and 10d)

The contact surface on the follower is spherical, with a large radius to compensate for the deflection and misalignment of the follower.

1.3 Cam Geometry

The cam profile is the actual working contour surface of the cam which is in contact with the knife-edge, roller surface, or flat-faced follower. Figure 1.3-1 shows a popular cam profile consisting of a single-lobe, external radial cam. The cam profile may be any shape whatsoever, external or internal, single or multi-lobe, etc. [4]

The base circle is the smallest circle drawn to the cam profile from the radial cam center. Obviously, the cam size is dependent upon the established size of the base circle. The follower reference point is the point of the follower located at knife edge, roller center, or spherical-faced center. The pitch curve is the path of the follower reference point. For the elementary knife-edge follower, the pitch curve and the cam profile are colinear. The prime circle is the smallest circle

drawn to the pitch curve from the cam center. The pitch point is the point on the cam pitch curve having the maximum pressure angle. The pitch point is significant in cam design since it is the start of the construction of the smallest cam in contact with a roller follower. For cylindrical cams, it is also the point on the displacement diagram having the maximum slope. The

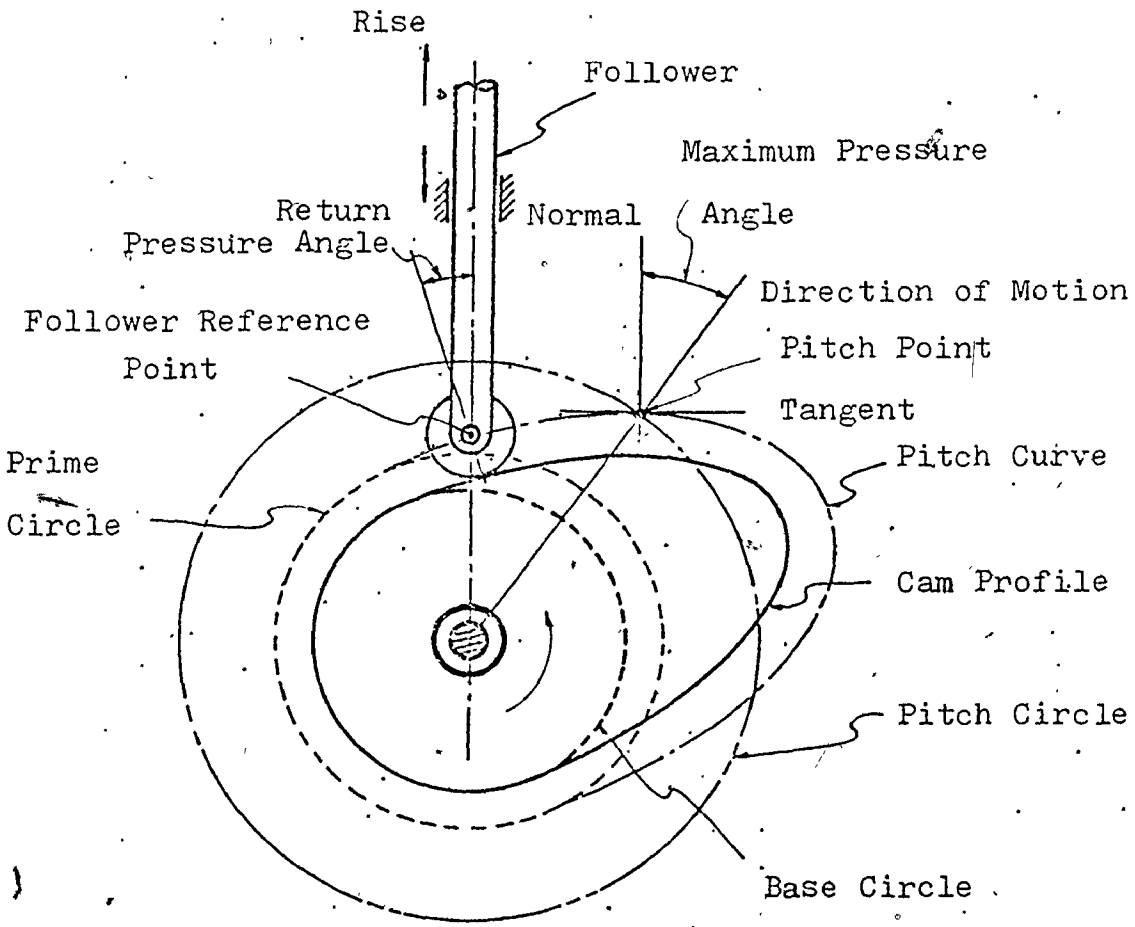

Figure 1.3-1 Cam Geometry and Nomenclature [4]

pressure angle is the angle (at any point) between the normal to the pitch curve and the instantaneous direction of the follower motion. This angle is important in cam design since it represents the steepness of the cam profile which, if too large, can affect the smoothness of the action. The pitch circle is one with its center at the cam axis passing through the pitch point. The pitch circle serves no purpose other than for the analysis of minimum cam size for a given pressure angle with a translating roller or knife-edge follower.

The pitch curve is also called the reference profile, which is the true profile representing the path a reference point on the follower must travel to achieve the design program of displacement. For any given reference profile the cam profile may vary in shape depending on the size and shape of the follower.

1.4 Displacement Curves of Cams

The displacement curve graphically represents the motion of the cam follower. For a specified rise or fall at a prescribed cam angle, the displacement curves are selected according to the dynamic characteristic for high speed operation.

The most important dynamic characteristics are acceleration and jerk. Acceleration determines the inertia force, if the deceleration is high, the return spring attached to the

cam follower must be sufficiently strong to keep the follower in contact with the cam. The resulting high stress at the contact point causes wear. Jerk is the time rate of change of acceleration. A sudden change of acceleration means a large magnitude of jerk, resulting in a sudden change of the force on the cam follower. The effect is a very undesirable shock to the mechanism.

Several types of follower motion are listed below:

1. Simple Polynomial Curves
   - (1) Straight line or constant velocity curve
   - (2) Parabolic or constant acceleration curve
   - (3) Cubic or constant pulse No. 1 curve
   - (4) Cubic or constant pulse No. 2 curve

2. Trigonometric Curves
   - (1) Simple harmonic motion or crank curve
   - (2) Double harmonic curve
   - (3) Cycloidal or sine acceleration curve

3. Combination Portions of Basic Curves
   - (1) Trapezoidal acceleration curve
   - (2) Modified trapezoidal acceleration curve

4. Polynomial Curves

(1) 2-3 polynomial

(2) 3-4-5 polynomial

(3) 4-5-6-7 polynomial

A variety of displacement curves will be briefly discussed, and the following notations will be used:

y = Displacement of the follower (in)

h = Maximum displacement of the follower (in)

θ = Cam angle rotation for follower displacement y

β = Cam angle rotation for total rise h

v = Velocity of the follower (in/sec)

a = Follower acceleration (in/sec^2)

(1) Straight Line or Constant Velocity Curve

This is the simplest follower motion of all those in the polynomial family. It has a straight-line displacement curve at a constant slope giving the smallest length for a given rise of all the basic curves (Figure 1.4-1).

$$y = h\theta/\beta$$

$$v = h\omega/\beta$$

$$a = 0$$

It is shown that the displacement is uniform, the velocity is constant, and the acceleration is zero during the rise.

There is, however, an impractical condition at the ends where the dwell meets this curve and at these points the acceleration has a theoretical value of infinity.

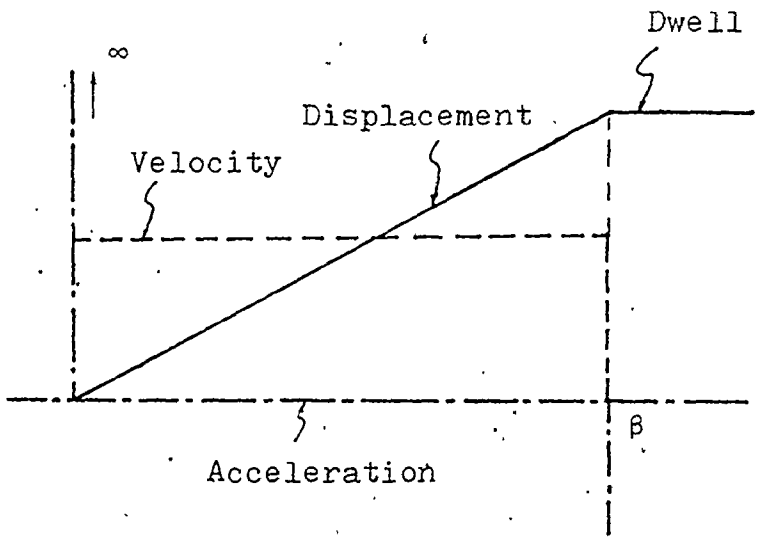

Figure 1.4-1 Characteristics of Straight Line Curve

(2) Parabolic or Constant Acceleration Curve

This curve of the polynomial family has the property of constant positive and negative accelerations (Figure 1.4-2).

The important advantage of this curve is that for a given angle of rotation and rise it produces the smallest possible accelerations. However, because of the sudden

change in the acceleration at the beginning, middle and the end of the stroke, shocks are produced. The jerk is infinite at these points.

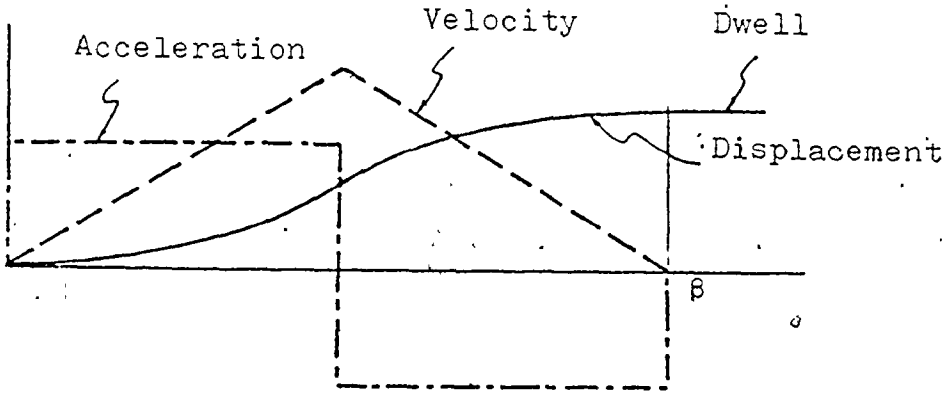

Figure 1.4-2 Characteristics of Parabolic Curve

Cam angle θ from 0 to β/2

$$y = 2h\left(\frac{\theta}{\beta}\right)^2$$

$$v = \frac{4h\theta\omega}{\beta^2}$$

$$a = \frac{4h\theta\omega^2}{\beta^2} = \text{constant}$$

Cam angle θ from $\beta/2$ to β

$$y = h\left[1 - 2\left(1 - \frac{\theta}{\beta}\right)^2\right]$$

$$v = \frac{4h\omega}{\beta}\left(1 - \frac{\theta}{\beta}\right)$$

$$a = -\frac{4h\omega^2}{\beta^2} = \text{constant}$$

(3) Cubic or Constant Pulse No. 1 Curve

This curve has a triangular acceleration curve and is a modification of the parabolic curve, eliminating the abrupt change in acceleration at the beginning and at the end of the stroke. This has the advantage of reducing the vibrations, shock, wear and noise that occur at these points with the parabolic curve. Nevertheless, the cubic curve has the same poor infinite slope characteristic at the mid-point of the acceleration curve, as the parabolic curve.

It is recognized (Figure 1.4-3) that the curve is discontinuous and must be considered in two halves.

Cam angle θ from 0 to $\beta/2$

$$y = 4h\left(\frac{\theta}{\beta}\right)^3$$

$$v = \frac{12h\omega}{\beta^2}\left(\frac{\theta}{\beta}\right)^2$$

$$a = \frac{24h\omega^2}{\beta^2}\left(\frac{\theta}{\beta}\right)$$

Cam angle θ from $\beta/2$ to β

$$y = h\left[1 - 4\left(1 - \frac{\theta}{\beta}\right)^3\right]$$

$$v = \frac{12h\omega}{\beta}\left(1 - \frac{\theta}{\beta}\right)^2$$

$$a = -\frac{24h\omega^2}{\beta^2}\left(1 - \frac{\theta}{\beta}\right)$$

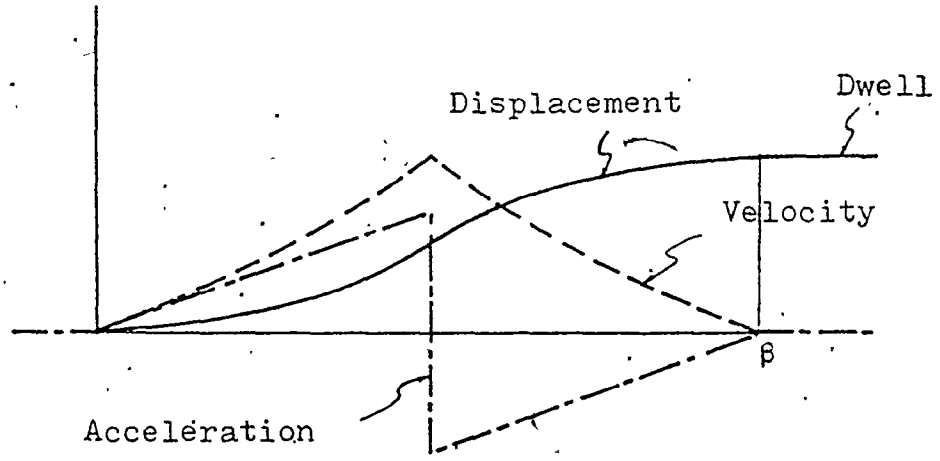

Figure 1.4-3 Characteristics of Cubic Curve No. 1

(4) Cubic or Constant Pulse No. 2 Curve

This curve is similar to the constant acceleration and the constant pulse No. 1 curves, but differs from these in that there is no abrupt change in acceleration at the transition

point and also that its acceleration is a continuous curve for the complete rise. Similar to the constant acceleration curve, it has the dicadvantages of abrupt change in acceleration at the beginning and the end of the stroke (Figure 1.4-4).

$$y = h\frac{\theta^2}{\beta^2}\left(3 - \frac{2\theta}{\beta}\right)$$

$$v = \frac{6h\theta\omega}{\beta^2}\left(1 - \frac{\theta}{\beta}\right)$$

$$a = \frac{6h\omega^2}{\beta^2}\left(1 - \frac{2\theta}{\beta}\right)$$

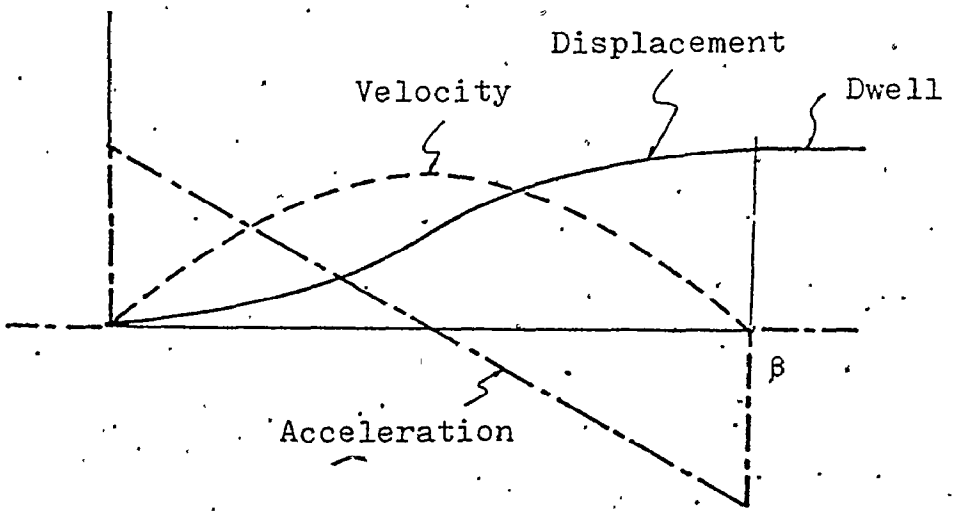

Figure 1.4-4 Characteristics of Cubic curve No. 2

(5) Simple Harmonic Motion or Crank Curve

This curve of the trigonometric family is one of the most popular primarily because of its simplicity in layout and understanding. It provides acceptable performance at moderate speeds. The resulting motion of the follower on such a cam is simple harmonic movement similar to that of a swinging pendulum (Figure 1.4-5).

$$y = \frac{h}{2} \cdot \left(1 - \cos\frac{\pi\theta}{\beta}\right)$$

$$v = \frac{h\pi\omega}{2\beta} \cdot \sin\frac{\pi\theta}{\beta}$$

$$a = \frac{h}{2}\left(\frac{\pi\omega}{\beta}\right)^2 \cdot \cos\frac{\pi\theta}{\beta}$$

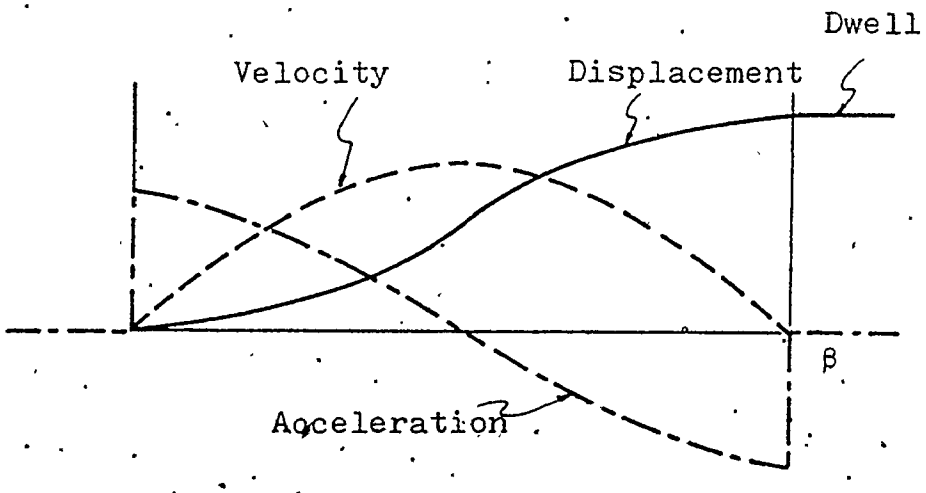

Figure 1.4-5 Characteristics of Simple Harmonic Motion Curve

(6) Double Harmonic Curve

This unsymmetrical curve (Figure 1.4-6) is composed of the difference between two harmonic motions, one being one-quarter of the amplitude and twice the frequency of the other. It has the advantages of the simple harmonic curve with almost complete elimination of high shock and vibration at the beginning of the stroke. The rate of acceleration change at the beginning of the stroke is small, giving smooth action at that point.

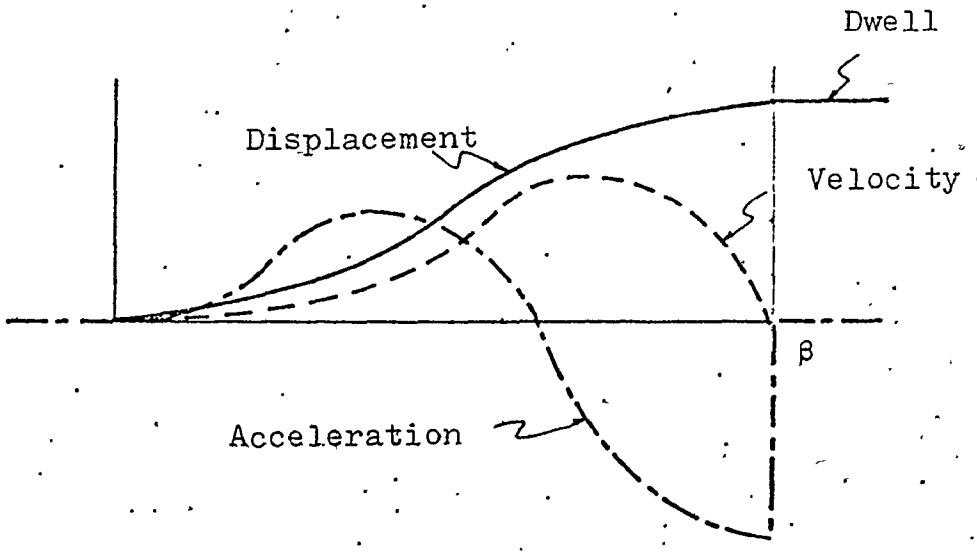

Figure 1.4-6 Characteristics of Double Harmonic Motion Curve

In general, this curve is better applied to dwell-rise-return-dwell cams in which no sudden acceleration occurs for the complete curve.

$$y = \frac{h}{2}\left[\left(1 - \cos\frac{\pi\theta}{\beta}\right) - \frac{1}{4}\left(1 - \cos\frac{\pi\theta}{\beta}\right)\right]$$

$$v = \frac{h}{2}\frac{\pi\omega}{\beta}\left(\sin\frac{\pi\theta}{\beta} - \frac{1}{2}\sin\frac{2\pi\theta}{\beta}\right)$$

$$a = \frac{h}{2}\left(\frac{\pi\omega}{\beta}\right)^2\left(\cos\frac{\pi\theta}{\beta} - \cos\frac{2\pi\theta}{\beta}\right)$$

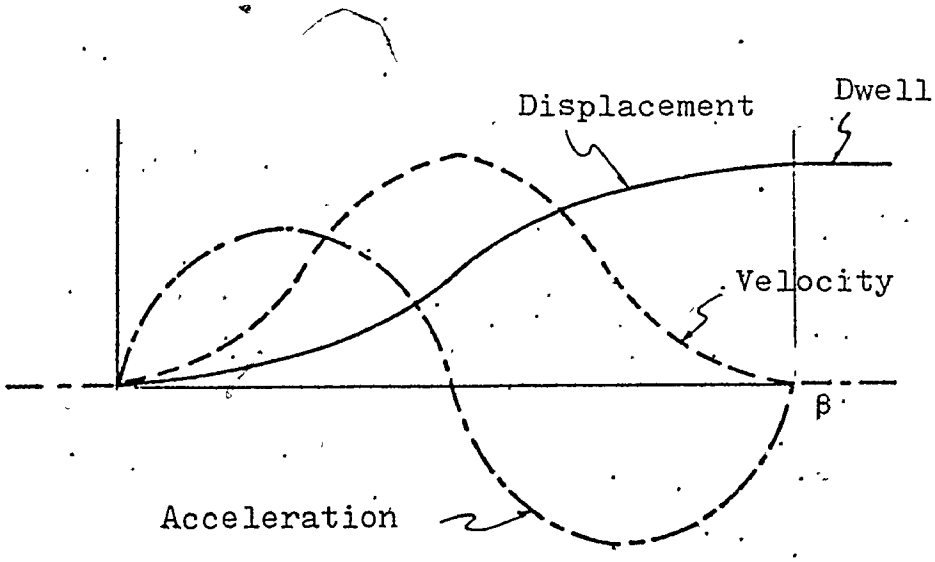

Figure 1.4-7 Characteristics of Cycloidal Curve

(7) Cylindrical or Sine Acceleration Curve

This curve is basically generated from a cycloid. For high speeds, the cycloidal curve is the best of all if the accuracy of the machining can be maintained at the beginning and the end of the stroke where other curves exibit their difficulty. The reason for its excellent performance is that there is no sudden change in acceleration at the intersection of the dwell periods and the rise curve (Figure 1.4-7).

$$y = \frac{h}{\pi}\left(\frac{\pi\theta}{\beta} - \frac{1}{2}\sin\frac{2\pi\theta}{\beta}\right)$$

$$v = \frac{h\omega}{\beta}\left(1 - \cos\frac{2\pi\theta}{\beta}\right)$$

$$a = \frac{2h\pi\omega^2}{\beta^2}\cdot\sin\frac{2\pi\theta}{\beta}$$

(8) Trapezoidal Acceleration Curve

This curve is composed of a parabolic motion combined with the cubic curves (Figure 1.4-8). The parabolic curve is modified by changing its acceleration from a rectangular to trapezoidal shape and good for high speed cams if it is machined accurately.

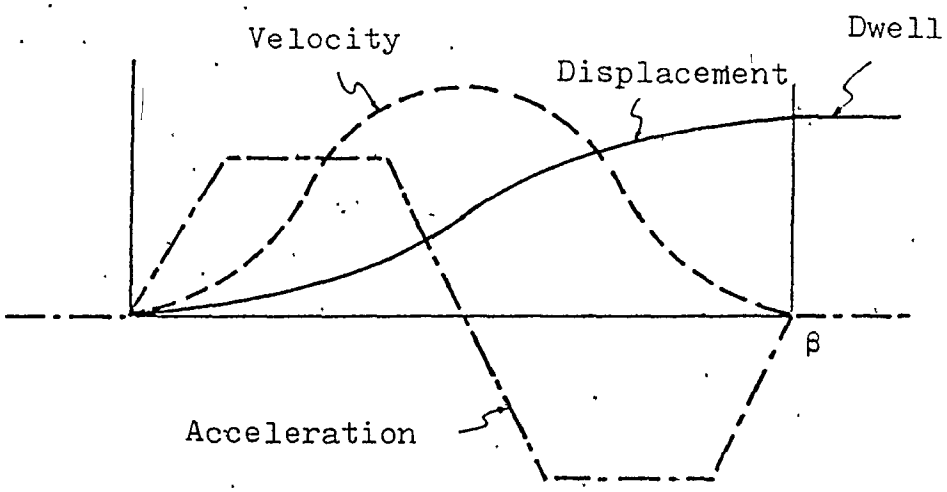

Figure 1.4-8 Characteristics of Trapezoidal Acceleration Curve

Cam angle θ from 0 to $\beta/8$

$$y = \frac{64}{9} h \left(\frac{\theta}{\beta}\right)^3$$

$$v = \frac{64}{3} \frac{\omega h}{\beta} \left(\frac{\theta}{\beta}\right)^2$$

$$a = \frac{128}{3} \frac{h\theta\omega^2}{\beta^3}$$

Cam angle θ from $\beta/8$ to $3\beta/8$

$$y = h\left[\frac{1}{72} - \frac{1}{3}\frac{\theta}{\beta} + \frac{8}{3}\cdot\left(\frac{\theta}{\beta}\right)^2\right]$$

$$v = \frac{h\omega}{\beta}\left[-\frac{1}{3} + \frac{16}{3}\cdot\frac{\theta}{\beta}\right]$$

$$a = \frac{h\omega^2}{\beta^2}\cdot\frac{16}{3}\,\theta$$

Cam angle θ from $3\beta/8$ to $\beta/2$

$$y = h\left[\frac{7}{18} - \frac{10}{3}\frac{\theta}{\beta} + \frac{32}{3}\left(\frac{\theta}{\beta}\right)^2 - \frac{64}{9}\left(\frac{\theta}{\beta}\right)^3\right]$$

$$v = \frac{h\omega}{\beta}\left[-\frac{10}{3} + \frac{64}{3}\frac{\theta}{\beta} - \frac{64}{3}\left(\frac{\theta}{\beta}\right)^2\right]$$

$$a = \frac{h\omega^2}{\beta^2}\left[\frac{64}{3} - \frac{128}{3}\frac{\theta}{\beta}\right]$$

(9) Modified Trapezoidal Acceleration Curve

This curve is a combination of a parabolic and cycloidal motion, and used in lieu of the trapezoidal acceleration curve (Figure 1.4-9).

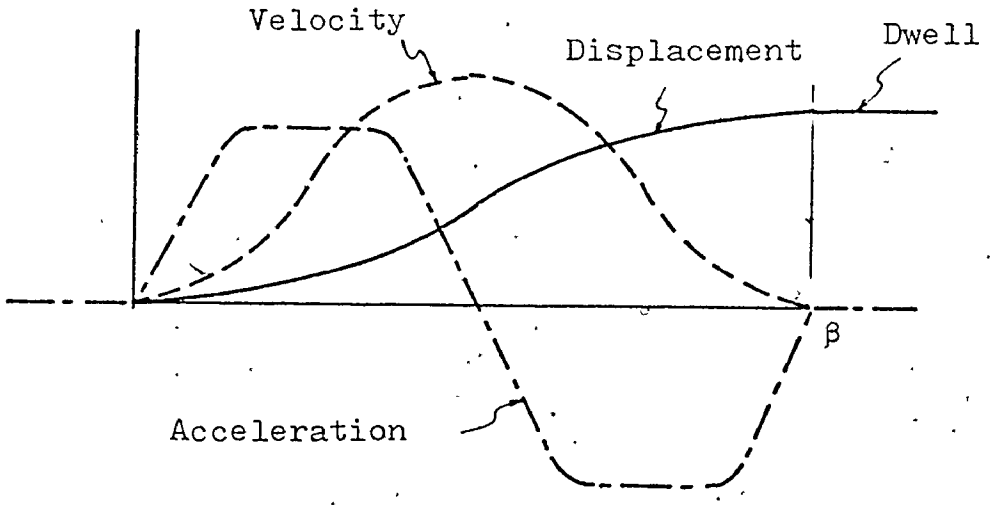

Figure 1.4-9 Characteristics of Modified Trapezoidal Acceleration Curve

Cam angle θ from 0 to $\beta/8$

$$y = 0.097\, h \left[4 \frac{\theta}{\beta} - \frac{1}{\pi} \sin\left(4\pi \frac{\theta}{\beta}\right)\right]$$

$$v = 0.097 \frac{h\omega}{\beta} \left[4 - 4 \cos\left(4\pi \frac{\theta}{\beta}\right)\right]$$

$$a = 4.87 \frac{h\omega^2}{\beta^2} \sin\left(4\pi \frac{\theta}{\beta}\right)$$

Cam angle θ from $\beta/8$ to $3\beta/8$

$$y = h\left[0.007 - 0.222\frac{\theta}{\beta} + 2.444\left(\frac{\theta}{\beta}\right)^2\right]$$

$$v = \frac{h\omega}{\beta}\left[-0.222 + 4.888\frac{\theta}{\beta}\right]$$

$$a = 4.888\frac{h\omega^2}{\beta^2}$$

Cam angle θ from $3\beta/8$ to $\beta/2$

$$y = h\left[-0.306 + 1.611\frac{\theta}{\beta} - 0.031\sin\left(4\pi\frac{\theta}{\beta} - \pi\right)\right]$$

$$v = \frac{h\omega}{\beta}\left[1.611 - 0.39\cos\left(4\pi\frac{\theta}{\beta} - \pi\right)\right]$$

$$a = 4.9\frac{h\omega^2}{\beta^2}\sin\left(4\pi\frac{\theta}{\beta} - \pi\right)$$

(10) 2-3 Polynomial

This curve is made by applying controls to the velocity curve in addition to the displacement curve.

$$y = h\left[3\left(\frac{\theta}{\beta}\right)^2 - 2\left(\frac{\theta}{\beta}\right)^3\right]$$

$$v = \frac{h\omega}{\beta}\left[6\left(\frac{\theta}{\beta}\right) - 6\left(\frac{\theta}{\beta}\right)^2\right]$$

$$a = \frac{h\omega^2}{\beta^2}\left[6 - 12\left(\frac{\theta}{\beta}\right)\right]$$

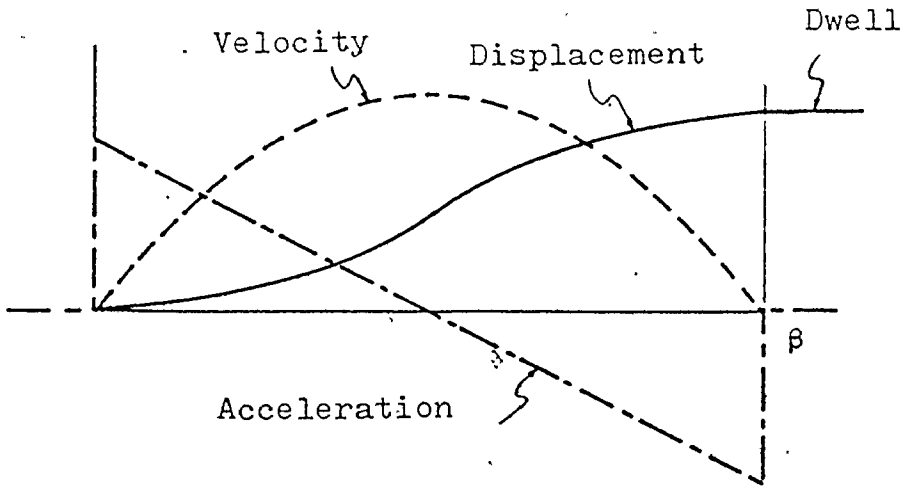

Figure 1.4-10 Characteristics of 2-3 Polynomial

(11) 3-4-5 Polynomial

This curve is a dynamic improvement over the 2-3 polynomial. The contour is controlled so that its acceleration, in addition to displacement and velocity, is a finite value at all times (Figure 1.4-11).

$$y = h\left[10\left(\frac{\theta}{\beta}\right)^3 - 15\left(\frac{\theta}{\beta}\right)^4 + 6\left(\frac{\theta}{\beta}\right)^5\right]$$

$$v = \frac{h\omega}{\beta}\left[30\left(\frac{\theta}{\beta}\right)^2 - 60\left(\frac{\theta}{\beta}\right)^3 + 30\left(\frac{\theta}{\beta}\right)^4\right]$$

$$a = \frac{h\omega^2}{\beta^2}\left[60\left(\frac{\theta}{\beta}\right) - 180\left(\frac{\theta}{\beta}\right)^2 + 120\left(\frac{\theta}{\beta}\right)^3\right]$$

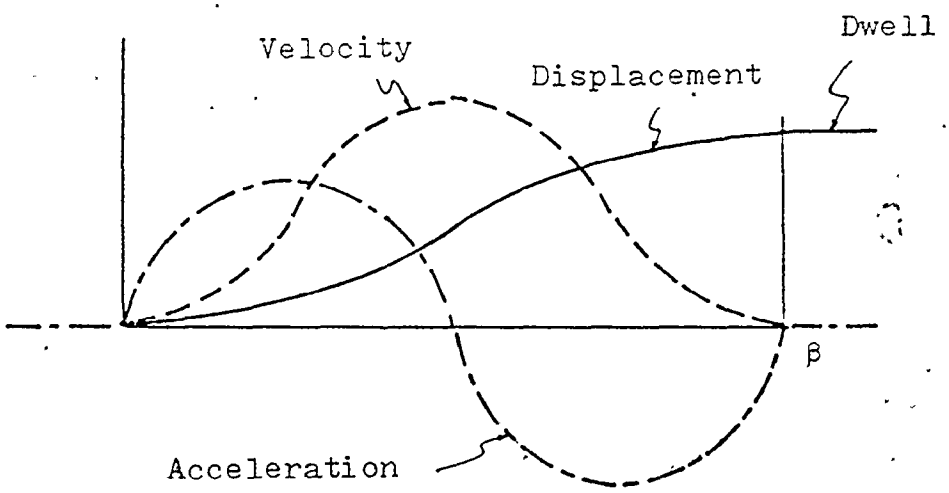

Figure 1.4-11 Characteristics of 3-4-5 Polynomial.

(12) 4-5-6-7 Polynomial

Beyond the 3-4-5 polynomial, this curve has controlled pulse or jerk at the end points as well as the displacement, velocity and acceleration (Figure 1.4-12). Compared with the 3-4-5 polynomial it has larger maximum acceleration and larger maximum pulse values.

$$y = h\left[35\left(\frac{\theta}{\beta}\right)^4 - 84\left(\frac{\theta}{\beta}\right)^5 + 70\left(\frac{\theta}{\beta}\right)^6 - 20\left(\frac{\theta}{\beta}\right)^7\right]$$

$$v = \frac{h\omega}{\beta}\left[140\left(\frac{\theta}{\beta}\right)^3 - 420\left(\frac{\theta}{\beta}\right)^4 + 420\left(\frac{\theta}{\beta}\right)^5 - 140\left(\frac{\theta}{\beta}\right)^6\right]$$

$$a = \frac{h\omega^2}{\beta^2}\left[420\left(\frac{\theta}{\beta}\right)^2 - 1680\left(\frac{\theta}{\beta}\right)^3 + 2100\left(\frac{\theta}{\beta}\right)^4 - 840\left(\frac{\theta}{\beta}\right)^5\right]$$

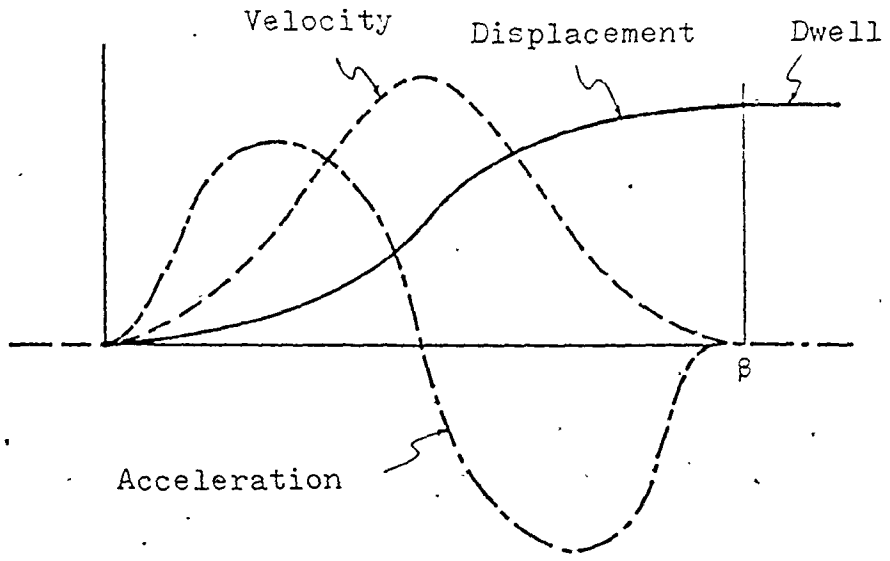

Figure 1.4-12 Characteristics of 4-5-6-7 Polynomial

1.5 Objectives

The main objective of this work is to devolop a stochastic analysis of the error produced in the velocity and acceleration motions of cam-follower mechanisms due to a specified or known achievable machining tolerance on the cam profile. All independent variables will be treated as random variables.

The second objective is to develop a user computer package for predicting the mechanical errors in cam follower mechanisms by a stochastic approach. This will provide a

very useful tool for designers saving much time and allowing them to select the best cam type especially for the design of disk cams which are extensively used in machinary.

Because of manufacturing and assembly errors, the output kinematic properties of the cam-follower system will be different from the desired one.

A few examples of those errors are: deviation from the exact cam profile due to machining errors, surface roughness at contact point, the tolerences in various joints, the variations in the input power and speed, the errors due to miss-alignment in the assembly. Besides affecting the dynamic performance, these errors affect the kinematic accuracy, the noise level and finally the life of the mechanism.

In this work, vector and matrix algebra is used mainly to derive the equation satisfying the contact relation between cam and follower.

The output parameter is expressed in terms of an input parameter and all the independent variables and the desired relation is obtained for performing the mechanical error analysis. Then all the variables are treated as random variables according to a stochastic model of the cam mechanism.

Due to the difficulty of finding the probability distribution function and the joint probability density function

for the output variable, the previously obtained relation between the output variable and the independent variables is expanded in Taylor series to determine the mean and the variance of the output variable from those of the random variables.

In addition to the stochastic approach for the error analysis, a method for the analytical design of cams is introduced in this work. The following are the main features of the produced here.

1. Though the method is only applied to the disk cam in this work, it can aptly be used for all types of cam follower systems with arbitrary relative position of the cam and the follower axis and for the arbitrary geometry of the follower surface. Therefore the approach is quite general.

2. From the point of view of fabrication of cams, the milling cutter position and grinding wheel position as well as the exact numerical data of the cam profile can be generated using the introduced method.

3. Without going through the intermediate step of finding the pitch curve, one can find the cam profile directly through this approach.

4. This method also makes it possible to analyze the contact stress between cam and follower by evaluating the principal curvatures, the principal directions, and the reduced curvature at the point of contact.

CHAPTER II

ERROR ANALYSIS OF CAM-FOLLOWER SYSTEMS
STOCHASTIC APPROACH

2.1 Literature Review

Accuracy is the specific determining factor in the performance of a cam-follower system. Poor manufacturing techniques can seriously impede the functional ability of the mechanism, and when a mechanism is fabricated and assembled, its performance differs from the desired one due to the manufacturing errors. In high speed machines, small errors in contour produce excessive noise, wear and vibration.

Investigations on the kinematic accuracy of cam mechanisms have been carried out by several kinematicans. Rothbart [2] discussed the accuracy of cam mechanisms from manufacturing point of view. An algebraic relation was derived connecting the maximum surface roughness error and the allowable increment in cutter positions. Moreover, a finite difference mehtod was used to find the effects of surface roughness on the follower acceleration. Tuttle [5] used the mathematical technique of vectorial addition to analyze the errors in any noncontinuous system- one that operates

between definite limits or returns to a definite starting point. Examples are cam-operated devices or four bar linkage systems. Besides the source of each error, the magnitude and the direction of each error are the two important factors. As this method makes an approximation of the error in a noncontinuous system, the accuracy of error calculation is poor and it is not applicable to the analysis of error in the cam-follower mechanism itself. Brittain and Horsnell [6] investigated the effects of grinding wheel wear and of machine setting errors on the surface of a production cam specified by a required valve motion. Use is made of the dynamic analysis of Barkan in predicting the influence of those profile errors on the dynamics of a valve train. The profile errors of the cam produced were considered by the inversion method and an equation was fitted to the cam surface in the region of the point of contact. The generality and accuracy of this approach were limited. Mischke [7] analysed the effects of mechanical error in error in an eccentric circular cam with a flat-faced translating follower. The surface roughness error was not taken into account and the whole approach was not of a general nature. Sergeyev [8] and Filkin [9] carried out an extensive study of camoid mechanisms. Manufacturing as well as assembly errors were considered in this analysis and equations were obtained for the accuracy of the camoid mechanism. However the equations were not derived by considering the surface geometry of the camoid surface, but by using the coordinates of

discrete points on the surface. This introduced an appreciable amount of approximation in the output errors. Mikhailov [10] discussed various methods of adjustments to reduce the output mechanical error and the relative effectiveness of the adjustment methods. The effects of the assembly errors and their adjustment had been studied by Rumiantsev [11]. A research team including Y. Kawasaki et. al. [12] presented the methods for computing the cam profile lift error due to a change in grinding wheel diameter. The lift error of the cam profile is caused by three factors ; the diameter of the cam grinding wheel, precision of the model cam profile and process errors. This method has not accounted for all of these in its general approach.

2.2 Input Errors as Random Variables

For the analysis of the mechanical errors, all input errors should be identified and classified. Depending upon their representativeness, errors may be generally divided into two groups- systematic and random. [13]

If a series of measurements are made and are found to differ from the true values by the same amount in the same direction, the errors are called systematic or constant. Systematic errors may arise directly from the instruments being used in the measurement, or from some joint instrument bias. Systematic errors are usually due to some isolated factors.

Accidental chance, or random errors will vary in magnitude and in direction in a given set of measurements in contrast to the systematic errors which are always in the same direction and of approximately the same order of magnitude. For random errors, it is essential to find their probability density functions and the associated statistic. For instance, when the same object is measured repeatedly, we usually get a series of measurements which, due to a large number of uncontrollable factors of small importance, vary at random about a certain value in such a way that these random errors can be considered as normally distributed about a zero, and the uncertainity of the method can be characterized by a standard deviation.

The accuracy indices of mechanisms must be expressed in the form of the maximum errors found in practice, i.e. of the maximum possible deviatiom from the normal dimension, taking into account the random nature of errors themselves.

In "probability theory" those processes are called random in which for the same external conditions, different sequences of the functions are obtained, where the connection between the dependent and independent variables in these functions is unknown and finally, only a probability distribution for the values of functions can be found. Consequently, the methods intended for the study of random processes are

designed for the investigation of a series of averaged indices of all the functions, and not of the separate realizations which form part of this study. [8]

In investigations into the accuracy of mechanisms, the study of errors as random processes is of great interest for cams, conoids, screw, friction and other mechanisms widely used in instrument construction. Many elements of the kinematic pairs of the above mechanisms have effective areas, the errors of which, arising from the specific nature of their manufacture, are independent.

A large number of errors are present in mechanisms, indeed there are usually no errors among them which are particularly dominant in their effect, and it is therefore assumed that the distribution of the errors of position of the elements of a mechanism of a specific design is subject to the Gaussian Law. The law is particularly applicable because the magnitudes of the maximum errors in the members of the individual mechanisms are not as a rule specified by the technical conditions.

The experimental data from which the values of the mathematical expectations, and the standard deviation were derived may be regarded as random selections from a larger population subject to the Gaussion Law of distribution. In such selections the probability of meeting a value of some parameter which deviates from its theoretical value by a quantity greater

than the trebled mean square error is vary small. But if the deviations of the parameters from their theoretical values exceed the corresponding magnitudes of the trebled mean square errors, then, from the principle that the events of low probability can be regarded as practically impossible, it may be deduced that the deviations observed are not random but essential.

To evaluate the magnitude of the dispersion of the statistical characteristics (mathematical expectations and standard deviation), it is the practice in mathematical statistics to determine and use their standard deviation.

2.3 Probabilistic Model of Cam Mechanism

In the application of probability theory a number of models arise time and time again. In many, diverse real situations, we will often make assumptions about physical problems which lead to analogous descriptions and hence to mathematically identical forms of the model. Only the numbers, for example, the values of the parameters of a model, and their interpretations differ from application to application. The random variables of interest in these situations have distributions which can be derived and studied independently of the specific application. These distributions have become so common that they have been given proper names and have been tabulated to facilitate their use.

The familiarity of these distributions in fact leads to their frequent adoption simply for reasons of computational expediency. Even though there may exist no argument (no model of the underlying physical mechanism) suggesting that a particular distribution is appropriate, it is often convenient to have a simple mathematical function to describe a variable.

The distribution used in this work is the normal one most commonly adopted for quantifying manufacturing errors, and it is especially applicable to errors in surface profile.

A stochastic model of cam mechanism is now developed considering the effects of all input errors, from which some mathematical equations are are generally derived relating the input errors and the output parameter. Some fundamental assumptions have to be made for the construction of stochastic model in order to make it amenable to mathematical manipulation while the model must yield as realistic a result as possible. [13]

Fig. 2.3-1 shows the fundamental cam-follower system. The mathematical model used here was first developed by Dhande and Chakraborty [14]. S_1 and S_2 respectively indicate the surfaces of the cam and the follower fixed to the moving coordinates (x_1, y_1, z_1) and (x_2, y_2, z_2) which move relative to the fixed coordinates $(x_{\bar{1}}, y_{\bar{1}}, z_{\bar{1}})$ and $(x_{\bar{2}}, y_{\bar{2}}, z_{\bar{2}})$. Two vectors $\bar{R}_1$ and $\bar{R}_2$ are

the radius vectors of the contact point P between cam and follower, expressed separately in the moving coordinate systems.

Let t_1 and t_2 be the parameters of motion of cam and follower links respectively, and ψ and ϕ the parameters of the follower surface S_2. Then, blending matrix algebra with vector analysis, we have

$$\bar{R}_1 = [x_1, y_1, z_1]^T$$

$$\bar{R}_2 = [x_2, y_2, z_2]^T = f(\psi, \phi) \qquad (2.3\text{-}1)$$

$$\bar{e}_2 = g(\psi, \phi)$$

where $\bar{e}_2$ is a unit normal vector to the surface S_2 at contact point P. [15,16]

To satisfy the condition of contact, the dot product of unit normal vector, $\bar{e}$, and relative velocity vector, $\bar{V}^{(12)}$, at the contact point P between the surface S_1 and S_2 must be equal to zero, i.e.,

$$\bar{e} \cdot \bar{V}^{(12)} = 0 \qquad (2.3\text{-}2)$$

since they are always perpendicular.

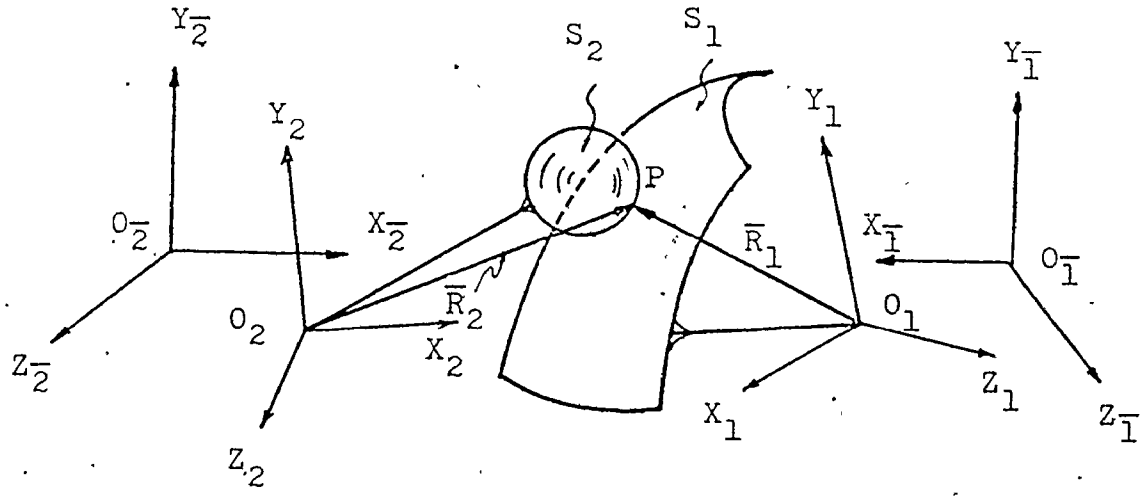

Figure 2.3-1 Schematic Diagram of Cam Mechanism

Let M_{21} be the geometric transformation matrix between the coordinate system of the cam and the follower, then

$$\bar{R}_2 = \bar{M}_{21}\,\bar{R}_1 \qquad (2.3\text{-}3)$$

If it is assumed that the equations of the cam and the follower surfaces are known and the surfaces are such that the condition of contact (2.3-2) and the geometric transformation equation (2.3-3) are satisfied at all points along the line of contact, the output parameter t_2 can be found from Eqn. (2.3-1),

(2.3-2) and (2.3-3) when t_1 is the input parameter.

Since equation (2.3-3) is a set of three equations with three unknown parameters - ψ , ϕ, and t_2, solving the set for ψ , ϕ, and t_2 we get the following;

$$\psi = \psi(x_1, y_1, z_1, t_1) \qquad (2.3\text{-}4)$$

$$\phi = \phi(x_1, y_1, z_1, t_1) \qquad (2.3\text{-}5)$$

and

$$t_2 = t_2(x_1, y_1, z_1, x_2, y_2, z_2, t_1) \qquad (2.3\text{-}6)$$

Equation (2.3-6) is the desired relation for the problem of mechanical error analysis, in which the output parameter t_2 can be viewed as a random dependent variable with t_1 as the input parameter while the variables x_1, y_1, z_1 are random independent variables due to surface roughness. The variables x_2, y_2 and z_2 also depend on the parameters such as the radius of the roller, the length of the follower arm and the cone angle in case of conical followers. These parameters, in turn, are random independent variables.

As mentioned previously, all random variables will be

assumed to be normally distributed. This is a common assumption for the distribution of manufacturing errors.

A general expression for Equation (2.3-6) may be written in the form,

$$t_2 = t_2(r_1, r_2, \ldots, r_n, t_1) \qquad (2.3\text{-}7)$$

where $r_1, r_2, \ldots, r_n$ are the input random variables. [17]

Let us denote the associated probability density functions of the input random variables of equation (2.3-6) as $f_i(r_i)$, their mean values as $\mu[r_i]$ and their standard deviation as $\sigma[r_i]$. As t_1 is the input parameter, for a fixed value of it the output variable t_2 can be considered as a dependent random variable.

Thus, the behaviour of the output variable t_2 can be studied by considering it as a random variable for a series of fixed values of t_1 in its range. For the output variable t_2, the probability distribution function $F(t_2)$ can be theoretically evaluated as:

$$F(t_2) = \int_{-\infty}^{r_1} \int_{-\infty}^{r_2} \ldots \int_{-\infty}^{r_n} f(r;\ i = 1,2,..,n;t_1) \prod_{i=1}^{n} dr_i \qquad (2.3\text{-}8)$$

where $f(r_i;\ i = 1,2,\ldots,n;\ t_1)$ is the joint probability density function at a fixed value of t_1. If the variables are uncorrelated, the probability density function and the probability distribution function respectively take the forms,

$$f(r_i;\ i = 1,2,\ldots,n;\ t_1) = \prod_{i=1}^{n} f(t_i)$$

and (2.3-9)

$$F(t_2) = \prod_{i=1}^{n} \int_{-\infty}^{r_i} f_i(r_i)\, dr_i$$

Now, we can see from Equations (2.3-8) and (2.3-9) that it is difficult to use them since the boundaries, r_i's of the integrals have to be expressed in terms of t_2 using Equation (2.3-8)- an extremely difficult task, and the value of $F(t_2)$ must be specified while the matching values of t_i's is sought. [18,19]

To avoid this difficulty, we refrain from seeking the probability distribution function $F(t_2)$, but will try to determine the mean and variance of t_2 from those of the random variables r_i's using the partial derivative method of random variable analysis. To do this, Eq.(2.3-7) is expanded in Taylor series about $\mu[r_i]$'s in the following way :

$$t_2 = t_2(\mu[r_i];\ i = 1,2,\ldots,n;\ t_1) + \sum_{i=1}^{n} \frac{\partial t_2\ (\mu[r_i];\ i = 1,2,..,n;\ t_1)}{\partial r_i}(r_i - \mu[r_i]) + \frac{1}{2}\sum_{i=1}^{n} \frac{\partial^2 t_2(\mu[r_i];\ i = 1,2,..,n;\ t_1)}{\partial r_2^2}(r_i - \mu[r_i])^2 + \ldots \qquad (2.3\text{-}10)$$

If the function is weakly nonlinear, t_2 can aptly be considered to be linear and the first two terms of Equation (2.3-9) are taken into account. In engineering practice, as the variations of r_i's about their mean values are very amall, their linear approximation of t_2 is not likely to result in any serious error.[20,21,22]

Under these circumstances, the expression (2.3-10) may be rewritten as:

$$t_2 = A + \sum_{i=1}^{n} B_i(r_i - \mu[r_i]) \qquad (2.3\text{-}11)$$

where

$$A = t_2(\mu[r_i];\ i = 1,2,\ldots,n;\ t_1)$$

$$B_i = \partial A / \partial(\mu[r_i])$$

The mean value and the standard deviation of the output variable t_2 are

$$\mu[t_2] = t_2(\mu\,[r_i];\ i = 1,2,\ldots,n;t_1)$$

$$\sigma[t_2] = \left[\sum_{i=1}^{n} B_i^2\sigma^2[r_i]\right]^{\frac{1}{2}} \qquad (2.3\text{-}12)$$

in which the standard deviation of each independent variable, $\sigma[r_i]$, is respectively defined as one third of tolerance of each r_i's since all random variables were previously assumed to be normally distributed.

An estimate of probability for any range of t_2 can be made by using either equation (2.3-9) or the principles of Chebyshev inequality which may be deonted by

$$P\ (\ t_2 - \mu[t_2] > c.\ \sigma[t_2]) \leq 1/c^2 \qquad (2.3\text{-}13)$$

where c is an arbitrary positive constant. [23]

When all r_i's are normally distributed and are uncorrelated, the output variable t_2 as given in equation (2.3-10) is also normally distributed. In this case we may conveniently use the standard tables for evaluating the probability for any specified range of t_2. [24]

2.4 Analysis of Cam Mechanism (Two Dimension)

Utilizing the Stochastic Model developed in section 2.3 we can analyse any cam-follower system for its mechanical errors, but, in this section, two dimensional cam mechanisms (the disk cam) will be analysed as typical cam mechanisms and suitable expressions are derived in accordance with follower type and its line of movement;

i) Translating flat faced follower

ii) Translating offset roller follower (including in line follower).

iii) Oscillating roller follower

The following notations will be used to define each follower type cam in this section.

r_b = base circle radius of the cam,

r = roller radius of follower,

a = offset distance of translating offset roller follower,

b = follower arm length of oscillating follower,

d = vertical offset distance of oscillating follower,

s_o = vertical displacement of prime circle

s = displacement of follower

θ = rotation angle of cam

ϕ = sweeping angle of oscillating follower

x_1, y_1 = moving coordinates fixed to cam

x_2, y_2 = moving coordinates fixed to follower

$x_{\bar{1}}$, $y_{\bar{1}}$ = fixed coordinates of cam.

$x_{\bar{2}}$, $y_{\bar{2}}$ = fixed coordinates of follower

1. Disk Cam with Translating Flat Faced Follower.

Figure 2.4-1 shows a disk cam with a translating flat faced follower.

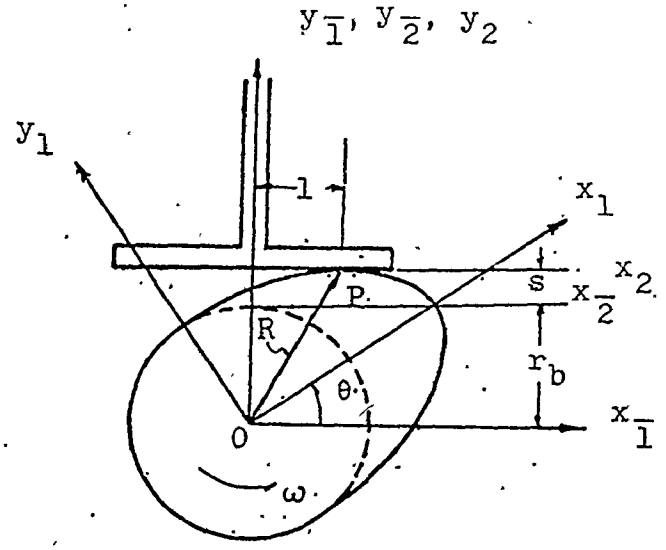

Figure 2.4-1 Disk Cam with a Translating Flat Faced Follower

Let l be the eccentricity of contact point, P, from cam centre; then the radius vector of the contact point in the fixed coordinates of the cam is indicated as:

$$\bar{R}_{\bar{1}} = [l,\ s + r_b]^T \qquad (2.4\text{-}1)$$

The unit normal vector to the same coordinate at P is:

$$\bar{e}_{\bar{1}} = [0,\ 1]^T \qquad (2.4\text{-}2)$$

and the relative velocity at P between cam and follower can be expressed as:

$$\bar{V}_1^{(21)} = \bar{V}_2^{(2)} - \bar{V}_1^{(1)} = [-\omega(s + r_b),\ \dot{s} - \omega l]^T \qquad (2.4\text{-}3)$$

since $\bar{V}_1^{(1)} = \bar{\Omega}_1^{(1)} \times \bar{R}_{\bar{1}} = [-\omega(s + r_b),\ \omega l]^T$

and $\bar{V}_2^{(2)} = [0,\ \dot{s}]^T$

where $\bar{\Omega}_1^{(1)}$ is an angular velocity vector of cam in a fixed coordinate and $\dot{s}$ is a velocity of follower.

By the orthogonality condition of the common vector and the relative velocity vector, the dot product of the Equations (2.4-2) and (2.4-3) will be zero, i.e.

$$\bar{e}_{\bar{1}} \cdot \bar{V}_{\bar{1}}^{(21)} = \dot{s} - \omega l = 0$$

and (2.4-4)

$$l = \frac{\dot{s}}{\omega}$$

Transforming (2.4-1) from the fixed coordinate to the moving one by the use of transformation matrix, M, we get:

$$\bar{R}_1 = M_{1\bar{1}} \bar{R}_{\bar{1}} = \begin{vmatrix} \cos\theta, & \sin\theta \\ -\sin\theta, & \cos\theta \end{vmatrix} [l, \quad s + r_b]^T$$

$$= [l\cos\theta + (s + r_b)\sin\theta, \quad -l\sin\theta + (s + r_b)\cos\theta]^T \quad (2.4\text{-}5)$$

Hence, the components of cam profile are:

$$\left.\begin{aligned} X &= l\cos\theta + (s + r_b)\sin\theta \\ Y &= -l\sin\theta + (s + r_b)\cos\theta \end{aligned}\right\} \quad (2.4\text{-}6)$$

where $s = f(\theta)$ given by displacement relation.

Substituting (2.4-4) into (2.4-6) and solving the latter for the follower displacement, s, we obtain an equation of displacement as:

$$s = X\sin\theta + Y\cos\theta - r_b \quad (2.4\text{-}7)$$

The partial derivatives to be used for the variance calculation are as follows:

$$\frac{\partial s}{\partial r_b} = -1, \quad \frac{\partial s}{\partial X} = \sin\theta, \quad \frac{\partial s}{\partial Y} = \cos\theta$$

The offset of cam from the follower centerline does not make sense kinematically, but is often used in order that the follower stem will rotate distributing the contact over a larger area on the follower and reducing wear. It follows that the pressure angle is zero at all times, allowing the cam to be much smaller.

2. Disk Cam with Translating Offset Roller Follower

A disk cam with a translating offset roller follower is shown in Figure 2.4-2.

The radius vector $\bar{R}^{(2)}$ of the point of contact P in the moving coordinate system is given by:

$$\bar{R}_2^{(2)} = [r\cos\psi, \; r\sin\psi]^T \qquad (2.4\text{-}8)$$

where ψ is the parameter of follower roller rotation.

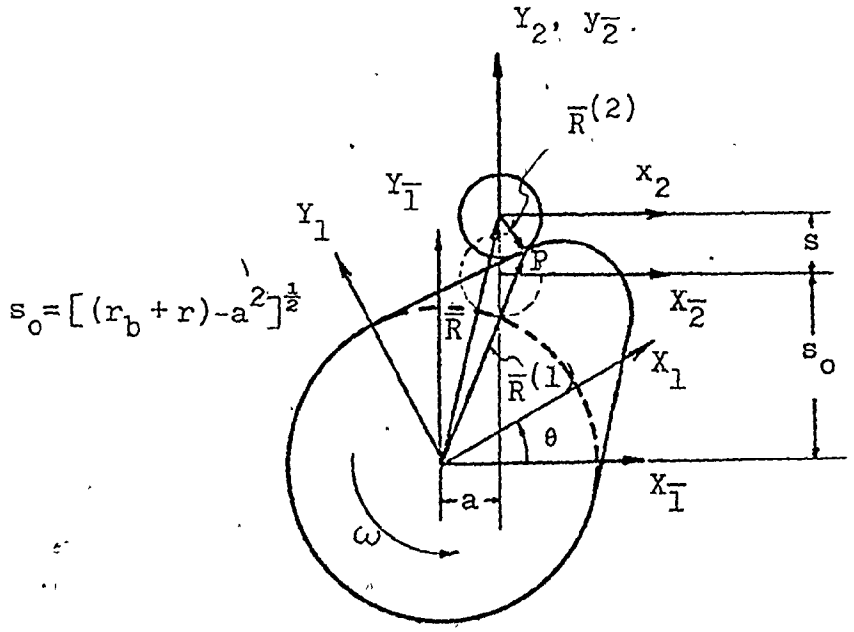

Figure 2.4-2 Disk Cam with a Translating Offset Roller Follower

The unit normal vector to the follower surface at P is:

$$\bar{e}_2^P = [\cos\psi, \sin\psi]^T \qquad (2.4\text{-}9)$$

and the relative velocity vector $\bar{V}_2^{(21)}$ is given by:

$$\bar{V}_2^{(21)} = \bar{V}_2^{(2)} - \bar{V}_2^{(1)} = [0,\dot{s},0]^T - \bar{\Omega}_2^{(1)} \times \bar{R}_2^{(1)} \qquad (2.4\text{-}10)$$

in which, $\bar{\Omega}_2^{(1)} = [0,\ 0, \omega]^T$

and

$$\bar{R}_2^{(1)} = \bar{R}_2 + \bar{R}_2^{(2)} = [a + r\cos\psi,\ (s + s_o + r\sin\psi)]^T \qquad (2.4\text{-}11)$$

Equation (2.4-10), therefore, becomes:

$$\bar{V}_2^{(21)} = [\omega(s + s_o + r\sin\psi),\ \dot{s} - \omega(a + r\cos\psi)]^T \qquad (2.4\text{-}10)'$$

Using the orthogonality condition, the scalar product of the Equations (2.4-9) and (2.4-10)' produces:

$$\bar{e}_2^P \cdot \bar{V}_2^{(21)} = \omega(s + s_o)\cos\psi + (\dot{s} - \omega a)\sin\psi = 0$$

and

$$\psi = \tan^{-1}\left[\frac{\omega(s + s_o)}{\omega a - \dot{s}}\right] \qquad (2.4\text{-}12)$$

where $s = f(\theta)$ given by the displacement relation.

The transformation of Equation (2.4-11) to the moving moving coordinate system of cam yields:

$$\bar{R}_1^{(1)} = M_{11}\bar{R}_1^{(1)} = \begin{vmatrix} \cos\theta(a + r\cos\psi) + \sin\theta(s + s_o + r\sin\psi) \\ -\sin\theta(a + r\cos\psi) + \cos\theta(s + s_o + r\sin\psi) \end{vmatrix} \qquad (2.4\text{-}13)$$

where M_{11} is a tranformation matrix from fixed coordinates to moving coordinates, which is defined as:

$$M_{1\bar{1}} = \begin{vmatrix} \cos\theta, & \sin\theta \\ -\sin\theta, & \cos\theta \end{vmatrix}$$

From (2.4-13), the cam profile is obtained,

$$\begin{aligned} X &= a\cos\theta + (s + s_0)\sin\theta + r\cos(\psi - \theta) \\ Y &= -a\sin\theta + (s + s_0)\cos\theta + r\sin(\psi - \theta) \end{aligned} \tag{2.4-14}$$

and the displacement equation is determined by solving (2.4-14) for the displacement, s,

$$s = X\sin\theta + Y\cos\theta - r\sin\psi - s_0 \tag{2.4-15}$$

in which

$$\psi = \cos^{-1}\left[\frac{X\cos\theta - Y\sin\theta - a}{r}\right]$$

The partial derivatives for the variance of displacement are given below;

$$\frac{\partial s}{\partial X} = \sin\theta - r\cos\psi\frac{\partial\psi}{\partial X}$$

$$\frac{\partial s}{\partial Y} = \cos\theta - r\cos\psi\frac{\partial\psi}{\partial Y}$$

$$\frac{\partial s}{\partial a} = -r\cos\psi\frac{\partial\psi}{\partial a} - \frac{\partial s_0}{\partial a}$$

$$\frac{\partial s}{\partial r} = -r\cos\psi\frac{\partial\psi}{\partial r} - \sin\psi - \frac{\partial s_0}{\partial r}$$

where

$$\frac{\partial\psi}{\partial X} = \frac{\cos\theta}{rk_2}, \quad \frac{\partial\psi}{\partial Y} = \frac{\sin\theta}{rk_2}, \quad \frac{\partial\psi}{\partial a} = \frac{-1}{rk_2}$$

$$\frac{\partial\psi}{\partial r} = \frac{(Y\sin\theta - X\cos\theta + a)}{r^2k_2}$$

$$\frac{\partial s_0}{\partial a} = -a\left[(r_b + r)^2 - a^2\right]^{-\frac{1}{2}}$$

$$\frac{\partial s_0}{\partial r} = (r_b + r)\left[(r_b + r)^2 - a^2\right]^{-\frac{1}{2}}$$

$$k_1 = \frac{(Y\sin\theta - Y\cos\theta + a)}{r}$$

$$k_2 = (1 - k^2)^{\frac{1}{2}}$$

The pressure angle η can be computed by the relation of

$$\eta = \cos^{-1}\frac{\left|\bar{e}_2^P \cdot \bar{V}_2^{(2)}\right|}{\left|\bar{V}_2^{(2)}\right|} = \cos^{-1}(\sin\psi)$$

We have just analyzed a cam mechanism with an offset follower, and a cam with an in-line follower can be described by putting the offset equal to zero.

3. Disk Cam with Oscillating Roller Follower

Figure 2.4-3 shows a disk cam with an oscillating roller follower.

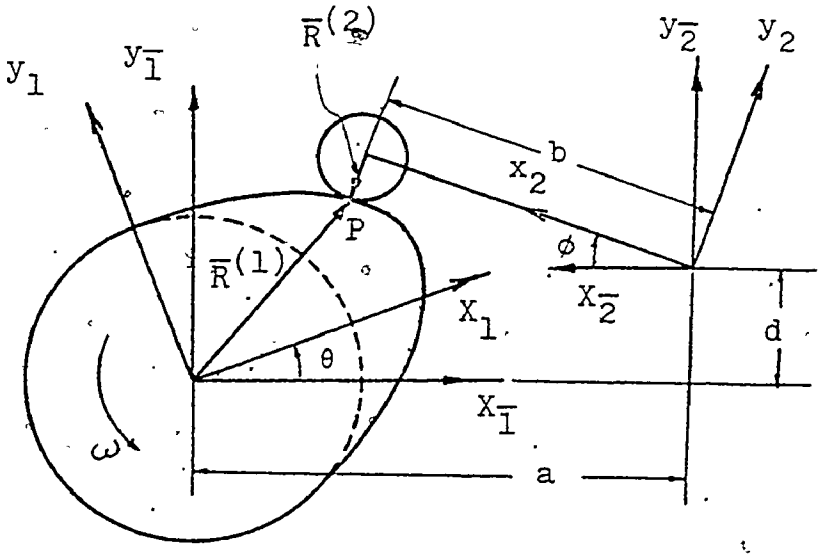

Figure 2.4-3 Disk Cam with an Oscillating Roller Follower

The radius vector for any point P in the moving coordinate system is given by:

$$\bar{R}_2^{(2)} = [b + r\cos\psi, \quad r\sin\psi]^T \qquad (2.4\text{-}16)$$

where ψ is a parameter of roller motion.

Then, the unit normal vector is obtained from (2.4-16) as:

$$\bar{e}_2^P = [\cos\psi, \sin\psi]^T \qquad (2.4\text{-}17)$$

We now find the relative velocity $\bar{V}_{\bar{2}}^{(21)}$ as follows;

$$\bar{V}_{\bar{2}}^{(21)} = \bar{V}_{\bar{2}}^{(2)} - \bar{V}_{\bar{2}}^{(1)}$$

$$\bar{V}_{\bar{2}}^{(2)} = \bar{\Omega}_{\bar{2}}^{(2)} \times \bar{R}_{\bar{2}}^{(2)}$$

$$\bar{\Omega}_{\bar{2}}^{(2)} = [0, 0, \dot{\phi}]^T$$

$$\bar{R}_{\bar{2}}^{(2)} = M_{\bar{2}2}\, \bar{R}_{\bar{2}}^{(2)} = \begin{vmatrix} \cos\phi, & -\sin\phi \\ \sin\phi, & \cos\phi \end{vmatrix} [b + r\cos\phi, r\sin\phi]^T$$

and

$$\bar{V}_{\bar{2}}^{(1)} = \bar{\Omega}_{\bar{2}}^{(1)} \times \bar{R}_{\bar{2}}^{(1)}$$

$$\bar{R}_{\bar{2}}^{(1)} = M_{\bar{2}\,\bar{1}}\, \bar{R}_{\bar{1}}^{(1)}$$

$$\bar{\Omega}_{\bar{2}}^{(1)} = [0, 0, -\omega]^T$$

$$M_{\bar{2}\,\bar{1}} = \begin{vmatrix} -1 & 0 \\ 0 & 1 \end{vmatrix}$$

$$\bar{R}_{\bar{1}}^{(1)} = [a,\ d]^T + [-b\cos\phi,\ b\sin\phi]^T + \underbrace{[-r\cos(\psi+\phi),\ r\sin(\psi+\phi)]^T}_{\text{Same as } \bar{R}_{\bar{2}}^{(2)}}$$

$$= \begin{vmatrix} a - b\cos\phi - r\cos(\psi+\phi) \\ d + b\sin\phi + r\sin(\psi+\phi) \end{vmatrix} \qquad (2.4\text{-}18)$$

Hence,

$$\bar{V}_{\bar{2}}^{(2)} = \begin{vmatrix} -\dot{\phi}\,[b\sin\phi + r\sin(\psi+\phi)] \\ \dot{\phi}\,[b\cos\phi + r\cos(\psi+\phi)] \end{vmatrix}$$

$$\bar{V}_{\bar{2}}^{(1)} = \begin{vmatrix} \omega\,[d + b\sin\phi + r\sin(\psi+\phi)] \\ -\omega[-a + b\cos\phi + r\cos(\psi+\phi)] \end{vmatrix}$$

finally,

$$\bar{V}^{(21)} = \begin{vmatrix} -[b\sin\phi + r\sin(\psi+\phi)]\,(\dot{\phi}+\omega) - \omega\, d \\ [b\cos\phi + r\cos(\psi+\phi)]\,(\dot{\phi}+\omega) - \omega\, a \end{vmatrix} \qquad (2.4\text{-}19)$$

From (2.4-17),

$$\bar{e}_{\bar{2}}^{P} = M_{\bar{2}\,2}\ \bar{e}_{\bar{2}}^{P} = [\cos(\psi+\phi),\ \sin(\psi+\phi)]^T \qquad (2.4\text{-}20)$$

Using the orthogonality of the common normal vector and the relative vector, the contact condition is defined from (2.4-19) and (2.4-20) as:

$$\begin{aligned} \bar{e}_{\bar{2}}^{P} \cdot \bar{V}_{\bar{2}}^{(21)} &= \sin\psi\left[(\dot{\phi}+\omega)b + \omega(d\sin\phi - a\cos\phi)\right]^{T} \\ &\quad - \omega(d\cos\phi - a\sin\phi)\cos\psi \\ &= 0 \end{aligned} \qquad (2.4\text{-}21)$$

Therefore from (2.4-21),

$$\psi = \tan^{-1}\frac{\omega(d\cos\phi - a\sin\phi)}{(\dot{\phi}+\omega)b + \omega(d\sin\phi - a\cos\phi)}$$

where $\phi = f(\theta)$ is given by the displacement relation. Transforming (2.4-18) to moving coordinates fixed to the cam, we get a cam profile as:

$$\bar{R}_{1}^{(1)} = M_{1\bar{1}}\,\bar{R}_{\bar{1}}^{(1)}$$

$$= \begin{vmatrix} \cos\theta, & \sin\theta \\ -\sin\theta, & \cos\theta \end{vmatrix} \begin{vmatrix} a - b\cos\phi - r\cos(\psi+\phi) \\ d + b\sin\phi + r\sin(\psi+\phi) \end{vmatrix}$$

and

$$X = a\cos\theta + d\sin\theta - b\cos(\theta + \phi) - r\cos(\psi + \theta + \phi)$$

$$Y = -a\sin\theta + d\cos\theta + b\sin(\theta + \phi) + r\sin(\psi + \theta + \phi) \qquad (2.4\text{-}22)$$

Solving (2.4-22) for ϕ, the follower displacement can be obtained as:

$$\phi = 2\tan^{-1}\left[\frac{-\alpha \pm (\alpha^2 + \beta^2 - \gamma^2)^{\frac{1}{2}}}{(\gamma - \beta)}\right] \qquad (2.4\text{-}23)$$

where

$$\alpha = X - a\cos\theta - d\sin\theta$$

$$\beta = Y + a\sin\theta - d\cos\theta$$

$$\gamma = -b\sin\theta - r\sin(\psi + \theta)$$

$$\psi = \cos^{-1}\left[\frac{\alpha^2 + \beta^2 - b^2 - r^2}{2br}\right]$$

The partial derivatives for the variance of displacement are given as:

$$\frac{\partial \phi}{\partial r_i} = \frac{2}{(\gamma - \beta)^2 + [-\alpha - (\alpha^2 + \beta^2 - \gamma^2)^{\frac{1}{2}}]^2}$$

$$\times \left((\gamma - \beta) \left[- \frac{\partial \alpha}{\partial r_i} \pm \frac{\alpha \frac{\partial \alpha}{\partial r_i} + \beta \frac{\partial \beta}{\partial r_i} - \gamma \frac{\partial r}{\partial r_i}}{(\alpha^2 + \beta^2 - r^2)^{\frac{1}{2}}} \right] \right.$$

$$\left. - [-\alpha \pm (\alpha^2 + \beta^2 - \gamma^2)^{\frac{1}{2}}] \left[\frac{\partial \gamma}{\partial r_i} - \frac{\partial \beta}{\partial r_i} \right] \right)$$

where,

$$\frac{\partial \alpha}{\partial X} = 1, \qquad \frac{\partial \alpha}{\partial Y} = 0,$$

$$\frac{\partial \alpha}{\partial a} = - \cos\theta, \qquad \frac{\partial \alpha}{\partial b} = 0,$$

$$\frac{\partial \alpha}{\partial r} = 0, \qquad \frac{\partial \alpha}{\partial d} = - \sin\theta$$

$$\frac{\partial \beta}{\partial X} = 0, \qquad \frac{\partial \beta}{\partial Y} = 1,$$

$$\frac{\partial \beta}{\partial a} = \sin\theta, \qquad \frac{\partial \beta}{\partial b} = 0,$$

$$\frac{\partial \beta}{\partial r} = 0, \qquad \frac{\partial \beta}{\partial d} = - \cos\theta$$

$$\frac{\partial \gamma}{\partial X} = - r \cos(\psi + \theta) \frac{\partial \psi}{\partial X}$$

$$\frac{\partial \gamma}{\partial Y} = - r \cos(\psi + \theta) \frac{\partial \psi}{\partial Y}$$

$$\frac{\partial \gamma}{\partial a} = - r \cos(\psi + \theta) \frac{\partial \psi}{\partial a}$$

$$\frac{\partial \gamma}{\partial d} = - r \cos(\psi + \theta) \frac{\partial \psi}{\partial d}$$

$$\frac{\partial \gamma}{\partial b} = -\sin\theta - r\cos(\psi + \theta) \frac{\partial \psi}{\partial b}$$

$$\frac{\partial \gamma}{\partial r} = -\sin(\psi + \theta) - r\cos(\psi + \theta) \frac{\partial \psi}{\partial r}$$

and

$$\frac{\partial \psi}{\partial X} = - C_4 \frac{(X - a\cos\theta - d\sin\theta)}{br}$$

$$\frac{\partial \psi}{\partial Y} = - C_4 \frac{(Y + a\sin\theta - d\cos 2)}{br}$$

$$\frac{\partial \psi}{\partial b} = C_4 \frac{(C_3 b + C_2 r)}{2b^2 r^2}$$

$$\frac{\partial \psi}{\partial r} = C_4 \frac{(C_3 r + C_2 b)}{2b^2 r^2}$$

$$\frac{\partial \psi}{\partial a} = \frac{-C_4[\sin\theta(Y+a\sin\theta-d\cos\theta)-\cos\theta(X-a\cos\theta-d\sin\theta)]}{br}$$

$$\frac{\partial \psi}{\partial d} = \frac{C_4[\cos\theta(Y+a\sin\theta-d\cos\theta)+\sin\theta(X-a\cos\theta-d\sin\theta)]}{br}$$

in which,

$$C_1 = C_2/C_3$$

$$C_2 = \alpha^2 + \beta^2 - b^2 - r^2$$

$$C_3 = 2br$$

$$C_4 = 1/(1 - C_1^2)^{\frac{1}{2}}$$

The pressure angle η is computed by the relationship:

$$\eta = \cos^{-1} \frac{\bar{e}_2^P \bar{V}_2^{(2)}}{\bar{V}_2^{(2)}}$$

$$= \cos^{-1} \frac{b\sin\psi}{(b^2 + r^2 + 2br\cos\psi)^{\frac{1}{2}}}$$

CHAPTER III

STOCHASTIC ANALYSIS OF VELOCITY AND ACCELERATION OF CAM FOLLOWER

3.1 Inroduction

We have found in the previous chapter the mean value and the standard deviation of the follower displacement due to the roughness of cam surface and the tolerances i.e. error bounds, satisfying the contact condition between the cam and the follower which is a critical parameter in cam mechanisms.

However, the kinematically important characteristics i.e. velocity and acceleration, were not taken into account and could not be handled by the method mentioned so far because the derivatives of the follower displacement with respect to time can not be obtained directly. It is also a property of cam mechanisms that the motion relation of the follower with respect to the cam angle must be given and the displacement equation is arithmetically established by solving simultaneously parametric equations which include the relation for the displacement.

When the displacement equation is thus differentiated with respect to time the velocity terms appear on both sides of the equation due to the implicit displacement term and

eliminated making the differentiation null. The same result will be obtained for the second derivatives.

Another method must be found or another different condition introduced. The Monte Carlo method, which is a powerful method of attacking stochastic problems, may be employed by choosing random samples of displacement within the displacement error bound and utilizing the finite differences method, which will be discussed in detail later. There are, however, several difficulties in determinating the sample size and incremental cam angle for the finite difference method. Moreover, when we use the computer which is indispensable for Monte Carlo method, its operation cost becomes high since an iteration should be done at every increment in the sample. [17]

The general equations of motion of a point in space which use the rotating and translating coordinate systems of the kinematic problems can also be applied to this problem, but the same cancelation of derivatives as in the direct differentiation of displacement occurs for velocity and acceleration.[25] On the other hand, we may consider the introduction of other conditions such as relative velocity, relative acceleration or radius of curvature of cam profile, but this method also failed to find the variances of velocity and acceleration because such conditions can not be independent kinematically of those used previously. [26]

The above reasons seem to explain why velocity and acceleration analysis has not been approached stochastically by kinematicians or cam designers in the past taking into account the mechanical error synthesized from the tolerances of each part in the mechanism.

However when we introduce numerical methods (finite differences) and the one of random variable analyses (the maximum likelihood estimation) this difficult problem can be attacked approximately. The variation of velocity and acceleration of cam follower due to the displacement variation can be estimated which is in turn caused by the individual errors such as a roughness of cam surface, tolerance of roller radius or tolerance of follower arm.

3.2 The Method of Finite Differences

Finite differences in cam-follower systems were first used by R. C. Johnson [27] and developed by Rothbart [2] to find the effects of surface roughness or the follower acceleration.

Briefly speaking, finite differences can be used as a numerical procedure for establishing the follower characteristic curves by utilizing incremental tabulated values which may be estimated, taken from the actual cam shape measurements, or calculated from an analytical cam curve.

Let s = follower displacement (inch)

V = follower velocity (inch/sec)

A = follower acceleration (inch/sec^2)

$\delta\theta$ = incremental cam angle (radian)

δt = time for cam to rotate through angle $\delta\theta$ (sec)

ω = angular velocity of cam (radian/sec)

and assume that cam displacement curve have three given points 1,2, and 3 with small and equal time interval δt, as shown in Figure 3.2-1

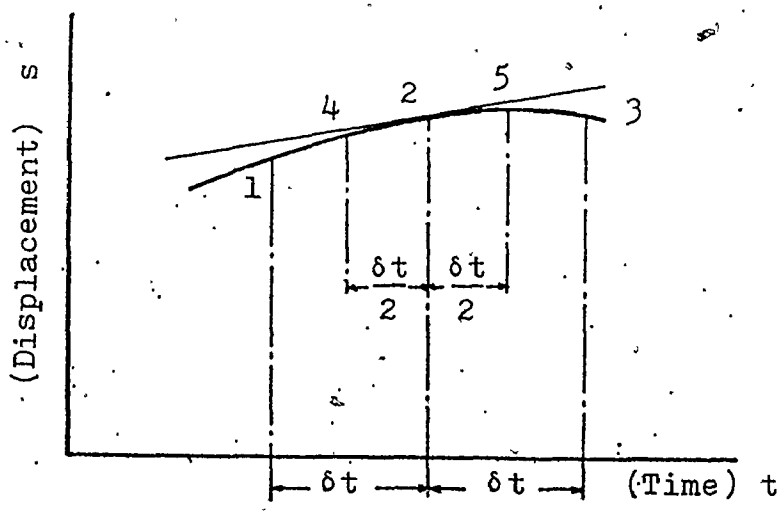

Figure 3.2-1 Displacement diagram showing increment points.

Then, the follower velocity at point 2 will be

$$V_2 = \left(\frac{ds}{dt}\right)_2 \doteq \lim_{\delta t \to 0} \frac{s_3 - s_1}{2\delta t} = \frac{s_3 - s_1}{2\delta t} \qquad (3.2\text{-}1)$$

Knowing $\delta t = \frac{\delta\theta}{\omega}$ and substituting this into equation (3.2-1), we get

$$V_2 \cong \frac{\omega}{2\delta\theta}(s_3 - s_1) \qquad (3.2\text{-}2)$$

For the acceleration of point 2, choose points 4 and 5 so as to be midpoints respectively between 1 and 2, and 2 and 3 as shown. The follower acceleration at point 2 will be

$$A_2 = \frac{d}{dt}\left(\frac{ds}{dt}\right)_2 \cong \frac{V_5 - V_4}{\delta t} \qquad (3.2\text{-}3)$$

Since $V_5 = \frac{s_3 - s_2}{\delta t}$ and $V_4 = \frac{s_2 - s_1}{\delta t}$, substituting these into (3.2-3) and arranging it with $\delta t = \frac{\delta\theta}{\omega}$,

$$A_2 \cong \left(\frac{\omega}{\delta\theta}\right)^2 (s_1 - 2s_2 + s_3) \qquad (3.2\text{-}4)$$

From the equations (3.2-2) and (3.2-4), we can see that the specific velocity and acceleration values at the dwell

and intersecting point of the curves are impossible to find, and this is a shortcoming of this method. The two equations basically follow by differentiation of the Stirling formula. In each differentiated formula only one term is used; equation (3.2-2) is a first derivative while (3.2-4) a second derivative. They accordingly have errors, as numerical procedures usually do;

i) Truncation errors

ii) Round-off errors

Truncation errors are made when infinite processes are replaced by finite processes such as the above two equations, and round-off errors arise when computing the finite term itself, which we do not compute exactly but approximately. When the computer is used, for example, round-off error occurs since the computer operates with a fixed number of digits, and any excess digits produced in multiplications or divisions are lost.

Thus it follows that:

actual error = truncation error + round-off error

where the actual error should be minimized.[28,29]

To minimize the combined error, an optimal difference has to be chosen since the small truncation errors generally require small differences while the small round-off errors large differences. But there is no explicit method to find the optimal differences and we have to estimate that value by approximation. Resorting to numerical analysis, it is known that

the total error of the computed value of a kth derivative will be a minimum if the interval or differences have been adjusted so that the absolute value of the respective truncation error becomes equal to k times that of the round-off error. Theoretically we can not find truncation errors and round-off errors practically and easily, and in this work, therefore, the actual errors at each appropriately estimated difference are calculated by computer and compared to determine the optimum interval for the smallest actual error. [30]

3.3 The Maximum Likelihood Estimation

We shall now consider stochastic methods which will make the finite difference method discussed in the previous section 3.2 effective for establishing the variance of velocity and acceleration from the displacement variance obtained previously.

Three methods are usually used in stochastic problems to compute moments of functional combinations of random variables ; statistically, the moment of a function of random variables uniquely defines the distribution of the function, since a distribution is uniquely defined by its moments if they are finite. Those are i) Moment generating function method, ii) Partial derivative method, iii) Maximum likelihood estimation methods. [31]

When the functions of density and distribution of random variables are known, the moment generating function method has a disadvantage in the handling of complicated and rigorous integrals that are difficult to obtain. This depends on the given problems as mentioned in section 2.3 since its principle follows the probabilistic theory.

The second method, the partial derivative method, was already used in the previous part of this work to develop the variance of displacement. However, it is an inconvenient method for handling derivatives obtained by expanding to a Taylor Series inspite of the simple function.

In comparison with the above two methods, the final method, the maximum likelyhood method is quite simple to apply and easy to handle especially for simple functions like Equations (3.2-2) and (3.2-4), and will be introduced here to obtain the variances of velocity and acceleration from those of displacement.

This method of generating estimators of unknown parameters was first introduced by Fisher [32] and generally leads to efficient and consistent estimators, which are based on a point estimate that is a single value used to estimate the parameter such as mean values, variances and standard deviations in question.

Assume normally distributed random variables X and Y as described by populations of values:

$$x_1, x_2, \ldots, x_m$$

$$y_1, y_2, \ldots, y_n$$

From the both populations, the mean value estimator of the sum variate $(\bar{z})$ can be calculated as:

$$\begin{aligned}\bar{z} = \frac{1}{mn} [& (x_1 + y_1) + (x_1 + y_2) + \ldots + (x_1 + y_n) \\ & + (x_2 + y_1) + (x_2 + y_2) + \ldots + (x_2 + y_n) \\ & + \ldots\ldots \qquad \ldots\ldots \\ & + (x_m + y_1) + (x_m + y_2) + \ldots + (x_m + y_n)]\end{aligned}$$

$$= \frac{\sum_{i=1}^{n} \sum_{j=1}^{n} (x_i + y_j)}{m \cdot n} \qquad (3.3\text{-}1)$$

Similarly, the standard deviation estimator of the sum variate is:

$$D_z = \left[\frac{1}{mn}\left([\bar{z}-(x_1+y_1)]^2+[\bar{z}-(x_1+y_2)]^2 + \ldots + [\bar{z}-(x_1+y_n)]^2\right.\right.$$

$$+[\bar{z}-(x_2+y_1)]^2+[\bar{z}-(x_2+y_2)]^2 + \ldots + [\bar{z}-(x_2+y_n)]^2$$

$$+ \ldots\ldots\ldots \qquad + \ldots\ldots\ldots$$

$$\left.\left.+[\bar{z}-(x_m+y_1)]^2+[\bar{z}-(x_m+y_2)]^2 + \ldots + [\bar{z}-(x_m+y_n)]^2\right)\right]^{\frac{1}{2}}$$

$$= \left[\sum_{i=1}^{m}\sum_{i=1}^{n}\frac{[\bar{z} - (x_i + y_i)]^2}{mn}\right]^{\frac{1}{2}} \qquad (3.3\text{-}2)$$

By arithmetic manipulation, when X and Y are statistically independent the above two equations respectively become:

$$\bar{z} = \frac{x_1 + x_2 + \ldots + x_m}{m} + \frac{y_1 + y_2 + \ldots + y_n}{n}$$

$$= \bar{x} + \bar{y} \qquad (3.3\text{-}3)$$

$$D_z = \left[\frac{(x_1 - \bar{x})^2 + (x_2 - \bar{x})^2 + \ldots + (x_m - \bar{x})^2}{m}\right.$$

$$\left. + \frac{(y_1 - \bar{y}_2)^2 + (y_2 - \bar{y})^2 + \ldots + (y_n - \bar{y})^2}{n}\right]^{\frac{1}{2}} \qquad (3.3\text{-}4)$$

$$= (D_x^2 + D_y^2)^{\frac{1}{2}}$$

The sum relationship of two normally distributed random variable is shown in Figure 2.5-1.

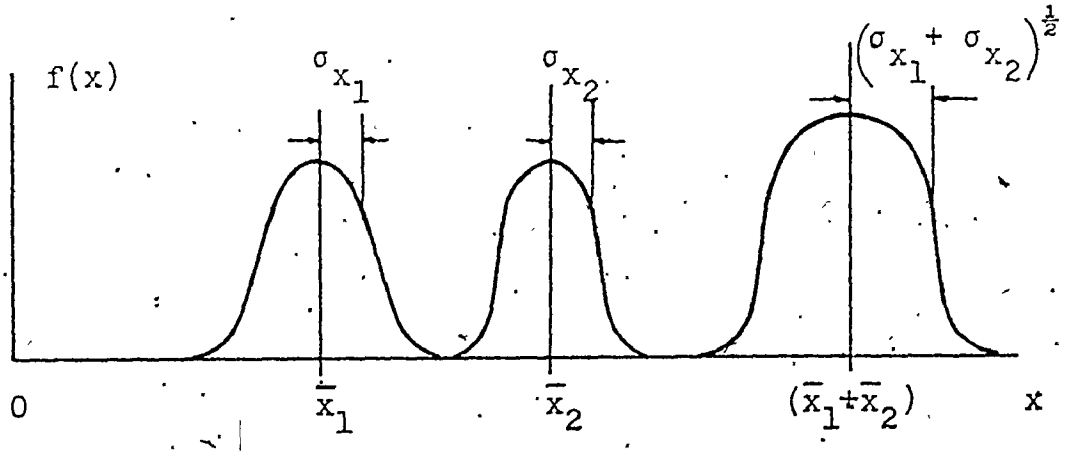

Figure 3.3-1 Sum of Two Normal Variates [33]
(statistically independent)

The mean value and the standard deviation about the differences of two normally distributed statistically independent variates X and Y can similarly found as,

$$\bar{z} = \frac{1}{m}\left[\frac{(x_1 - y_1) + (x_1 - y_2) + \ldots + (x_1 - x_n)}{n} + \frac{(x_2 - y_1) + (x_2 - y_2) + \ldots + (x_2 - y_n)}{n} + \ldots + \frac{(x_m - y_1) + (x_m - y_2) + \ldots + (x_m - y_n)}{n}\right] = \bar{x} - \bar{y} \quad (3.3\text{-}5)$$

$$\text{and} \qquad D_z = \left[\frac{1}{m.n} \sum_{i=1}^{m} \sum_{j=1}^{n} \left[(x_i - \bar{x}) - (y_j - \bar{y}) \right]^2 \right]^{\frac{1}{2}}$$

$$= (D_x^2 + D_y^2)^{\frac{1}{2}} \qquad (3.3\text{-}6)$$

where D_x and D_y are respectively the standard deviation estimators of random variables X and Y. The difference relationship of two normally distributed statistically independent variates is shown in Figure 3.3-2.

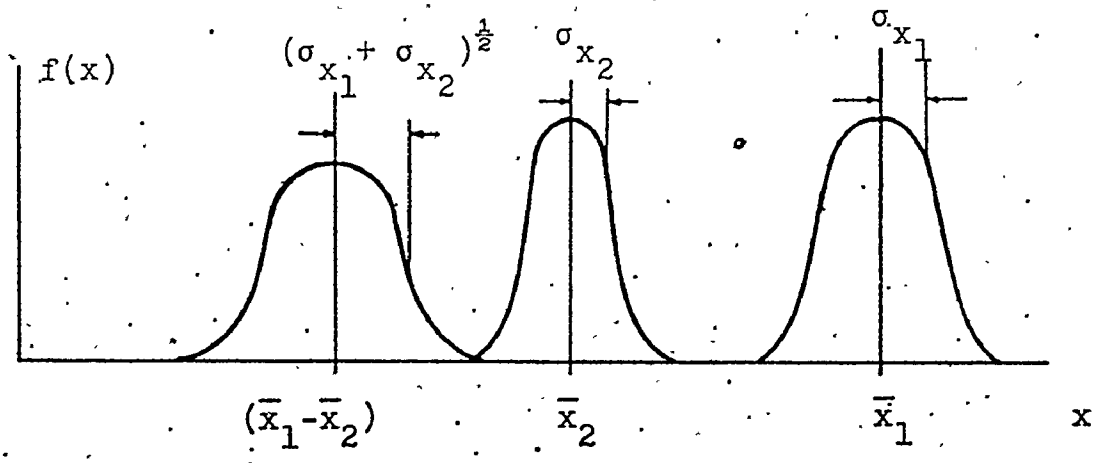

Figure 3.3-2 Difference of Two Normal Variates Stastically Independent [33]

Now, let us consider the linear combination,

$$w = aX + bY + cZ$$

in which X, Y and Z are independent normal variates and a, b and

c are the arbitrary constants.

By linear transformation of the normal variate (see Figure 2.5-3), the mean of the linear combination becomes:

$$\bar{w} = a\bar{x} + b\bar{y} + c\bar{z} \qquad (3.3\text{-}7)$$

and the standard deviation will be:

$$D_w = (a^2D_x^2 + b^2D_y^2 + c^2D_z^2)^{\frac{1}{2}} \qquad (3.3\text{-}8)$$

By recalling that $\lim_{m\to\infty} x = \mu_x$, $\lim_{m\to\infty} D_x = \sigma_x$, when the size of the samples is large, we write the Equations (3.3-3) - (3.3-8) as follows;

For sums:

$$\mu_z = \mu_x + \mu_y \qquad (3.3\text{-}3)'$$

$$\sigma_z = (\sigma_x^2 + \sigma_y^2)^{\frac{1}{2}} \qquad (3.3\text{-}4)'$$

For differences:

$$\mu_z = \mu_x - \mu_y \qquad (3.3\text{-}5)'$$

$$\sigma_x = (\sigma_x^2 + \sigma_y^2)^{\frac{1}{2}} \qquad (3.3\text{-}6)'$$

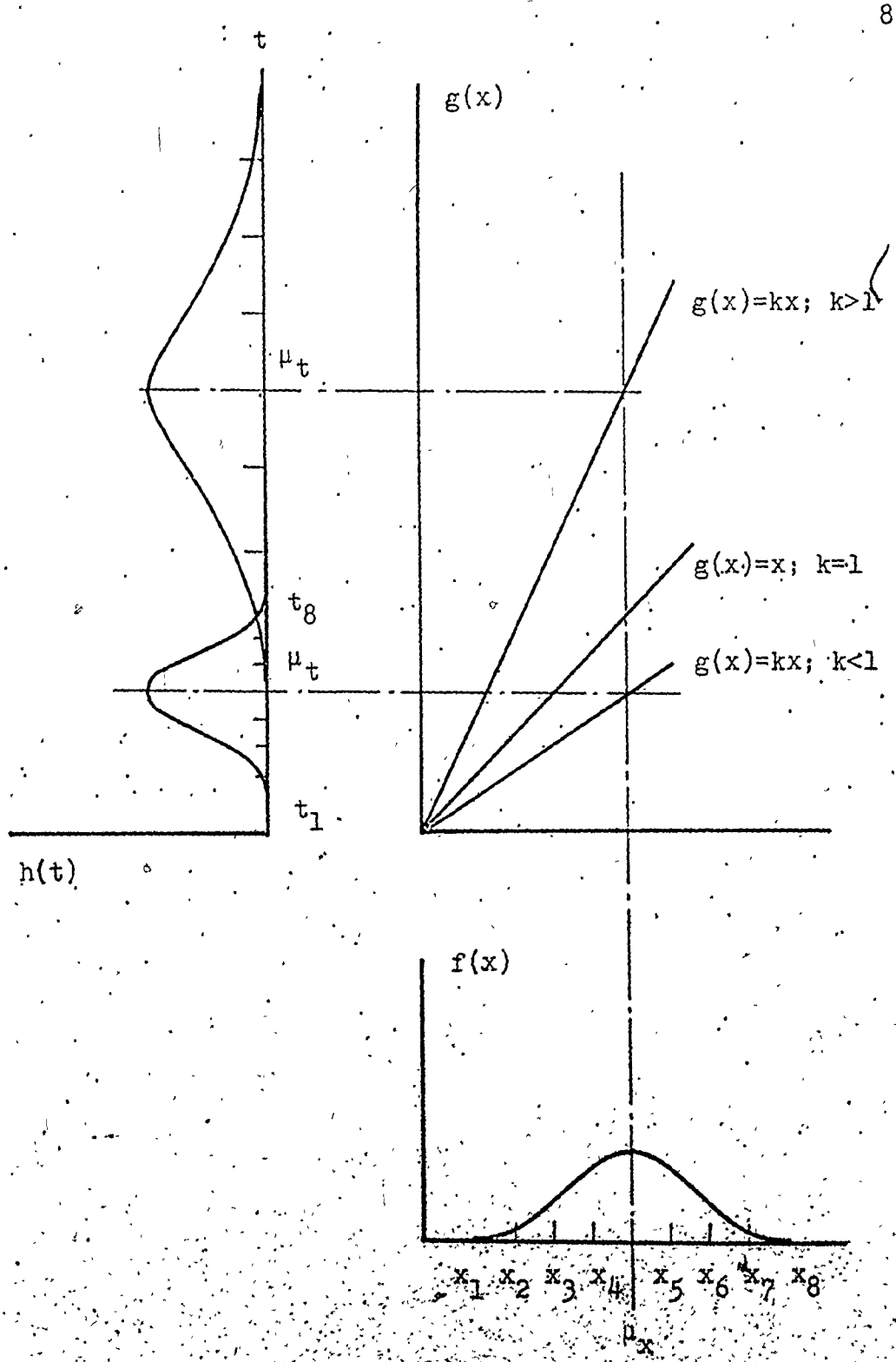

Figure 3.3-3 Linear Transformation of Normal Variate [33]

For linear combinations:

$$\mu_w = a\mu_x + b\mu_y + c\mu_z \qquad (3.3\text{-}7)'$$

$$\sigma_w = (a^2\sigma_x^2 + b^2\sigma_y^2 + c^2\sigma_z^2)^{\frac{1}{2}} \qquad (3.3\text{-}8)'$$

With the mean value and standard deviation of displacement acquired from Equation (2.3-12), we can approximately compute the variances of velocity and acceleration incorporating Equations (3.2-2) and (3.2-3) with the Equations (3.3-3)' - (3.3-8)'.

CHAPTER IV

APPLICATION TO TWO DIMENSIONAL CAM MECHANISM

4.1 Introduction

This method of stochastic analysis of the kinematic characteristics of cam mechanisms due to profile roughness which has been developed was applied and tested on a two-dimensional cam-follower system i.e. the disk cam. Disk cams have been classified according to follower types as listed below:

i) Flat faced follower
ii) Translating in-line roller follower
iii) Translating offset roller follower
iv) Oscillating roller follower

To analyse the effect of changing values of the design variables, a standard cam was selected for each type and each important design parameters(variables)were varied in turn by choosing dimensions for this parameter slightly higher and lower than the standard value.

Using the previous standard cam with prescribed tolerances for the analysis of the effect of tolerances on the various

standard motions, the variances in displacement, velocity and acceleration were analysed for each of the twelve standard motions mentioned in Section 1.4, Chapter 1.

These tests were all carried out by computer, the printed output of which were summarized in tables and the plotted graphs of which were selected only for the standard dimensioned cam as an example. Separate tables are provided showing the maximum and the minimum value of the variances.

Although the minimum variances are not as important as the maximum variances in cam mechanisms, they will be the main parameter for finding the position of cam rotation when the mechanism is specifically required to perform exactly as far as possible at some place on cam profile.

The original computer graphs are included here without change. Each graph was drawn by Benson-Lehner of CDC 6400 and carries respectively its 3σ band curves with variances plotted on the same graph to a different scale while including the pressure angle with respect to cam rotation angle for the purpose of comparison.

Here we shall introduce some diagrams which show how the graphs are to be interpreted.

It is understood that there is at every cam angle a normal distribution curve which is centered on the mean value (solid curve) taking the $+3\sigma$ curve and the -3σ curve as the upper and the lower limit respectively since the distribution was assumed normal.

Two examples of these were taken from Figures 4.2-1c and 4.5-1c for the purpose of explanation and are shown in Figures 4.1.1 and 4.1-2.

Using the normal probability distribution represented accurately by the probability density function:

$$f(x) = \frac{1}{\sigma\sqrt{2\pi}} e^{-(x-\mu)^2/(2\sigma^2)} \qquad (4.1\text{-}1)$$

where μ = mean value for random variable x

σ = standard deviation

the values of f_1 and f_2 in Figures 4.1-1 and 4.1-2 can be found.

It can be shown from Equation (4.1-1) that the distribution fully depends on the value of standard deviation. The values of h_1 and h_2 in Figures 4.1-1 and 4.1-2 equal to 3σ at that position and the values of f_1 and f_2, the values of maximum probability density, vary depending on those of h_1 and h_2. The bigger a value of h_1 or h_2 is, the smaller a value of f_1 or f_2 is. In other words, the narrower the width of 3σ is, the higher

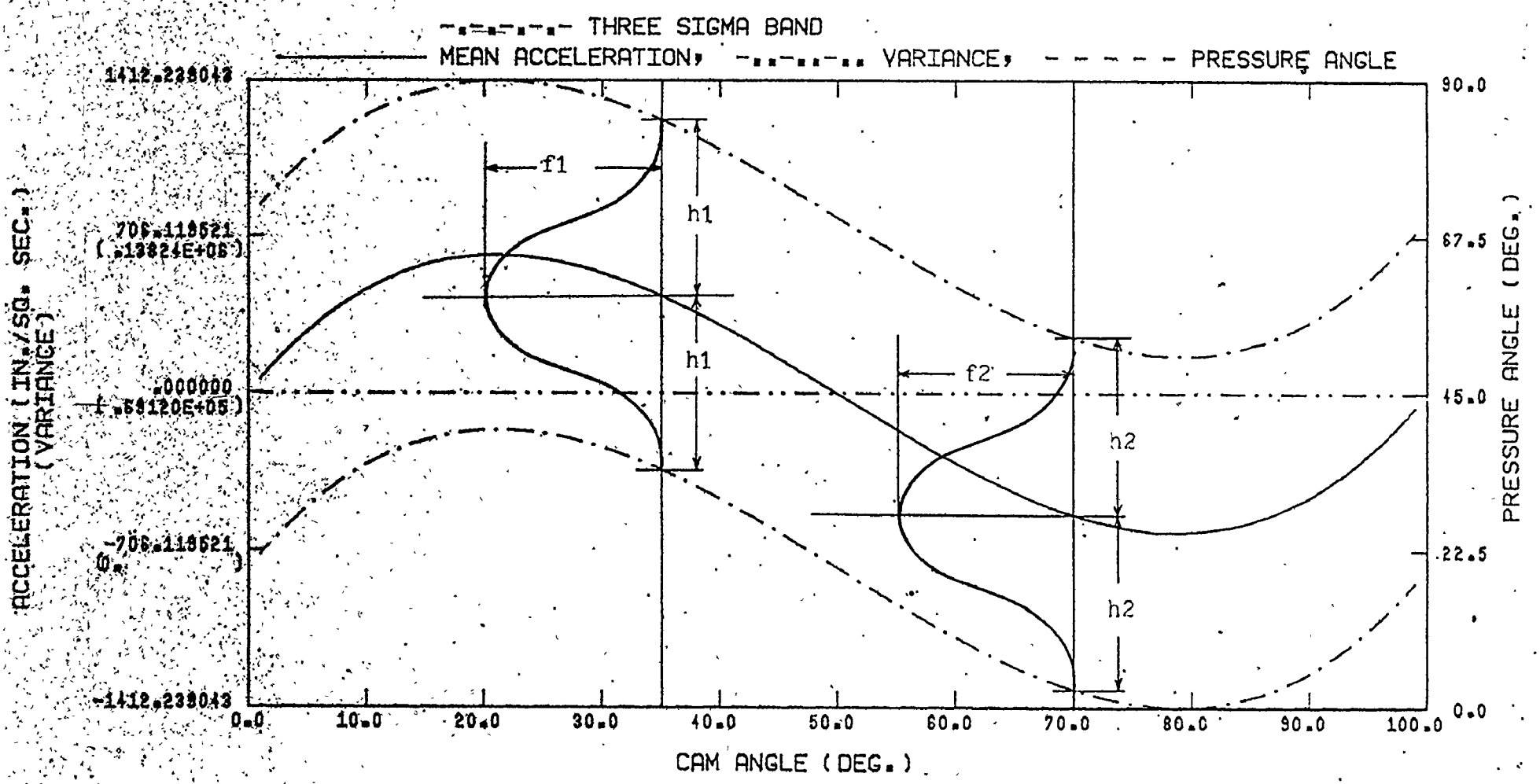

Figure 4.1-1 Normal Probability Density Curve between ± 3σ Bands of Acceleration of Flat Faced Follower.

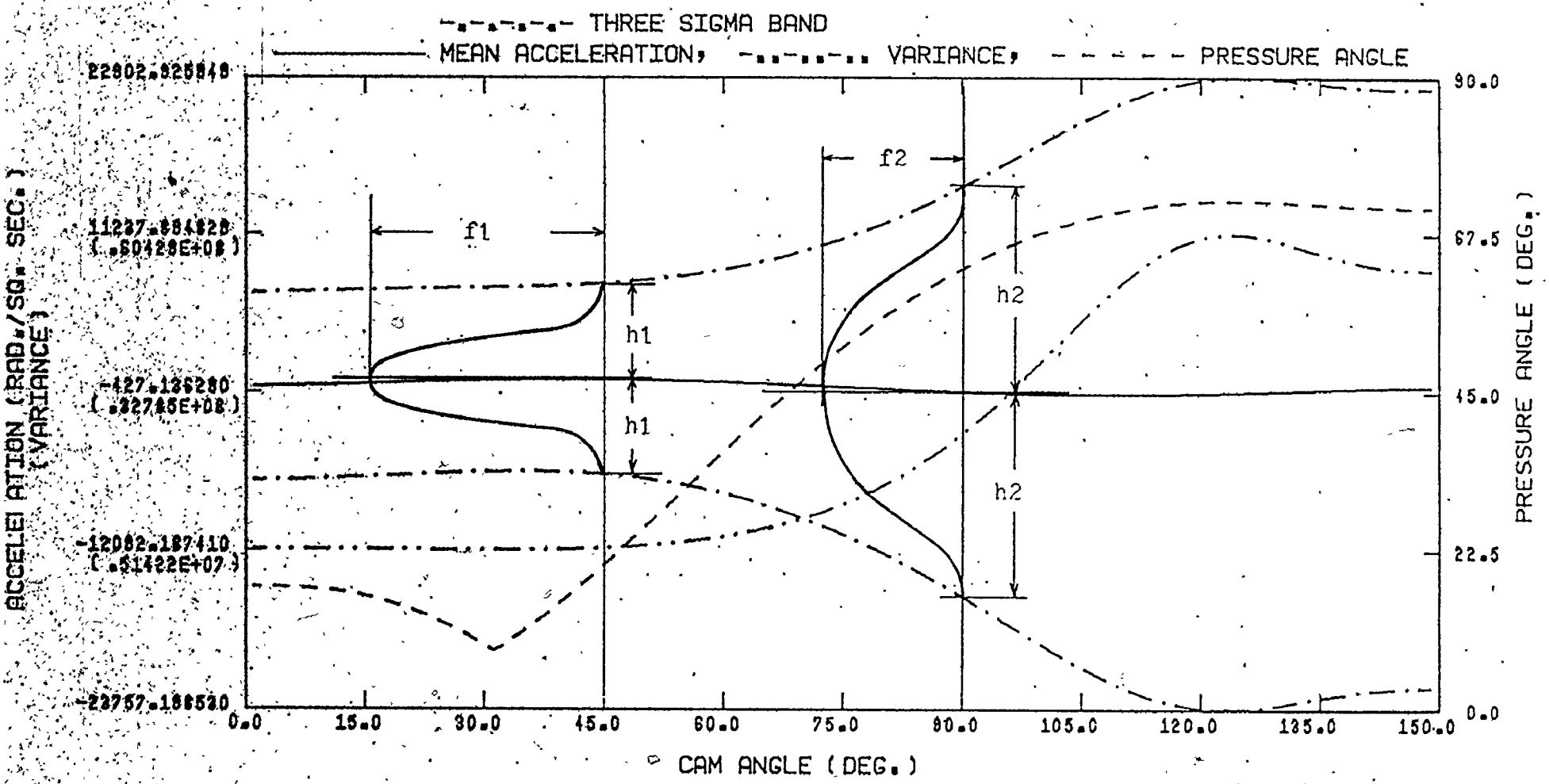

Figure 4.1-2 Normal Probability Density Curve between ± 3σ Bands of Acceleration of Oscillating Roller Follower

the height of density curve is. This is shown well in Figure 4.1-2. Where $h_1 < h_2$ and $f_1 > f_2$. The meaning of $f_1 = f_2$ as shown in Figure 4.1-1 is that the variances are all constant through the cam rotation angle.

Although the two dimensional cam mechanism was considered for the application and testing of the method developed because of its popularity and versatility, any kind or type of cam can be analysed and treated including three dimension cams, the important equations of which are provided in Appendices A and B for easy access to them.

Appendix A handles the subject of follower surfaces which is quite important in three dimension cams since for mechanisms having higher pair contact, the kinematic characteristics mainly depend on the nature of the surface at contact point.

The follower surfaces of the three dimension cam considered in Appendix A are as follows;

i) Spherical follower.
ii) Globoidal follower.
iii) Conical follower.
iv) Cylindrical follower.

Utilizing the equations obtained from Appendix A, three dimensional cam mechanisms according to the developed method

and employing the method developed, the following three-dimensional cams were analyzed in Appendix B.

1) Cylindrical cams with translating followers.
2) Cylindrical cams with oscillating followers.
3) Golboidal cams with oscillating cylindrical followers.
4) Camoids.

The method developed which analyzes follower mechanisms considering the exact contact condition between them was computerized. The user's information is provided in Appendix C and the listing of the program is provided in Appendix D. Several examples of the application of this error analysis are presented in the following sections.

4.2 Flat Faced Follower

For this follower type, a disk cam having the standard dimensions shown below was chosen:

Total Rise	(T.R.)	= 0.75 in.
Radius of Base Circle	(R.B.)	= 1.5
Cam Angle for Rise	(C.R.)	= 100 deg.
RPM		= 200
Incremental Cam Angle	(I.A.)	= 1.0 deg.
Tolerance on Link		= $\pm$ 0.0002 in.
Tolerance on Cam Profile		= $\pm$ 0.0001 in.
Standard Motion Curve		= 3-4-5 Polynomial.

1. Analysis of the Effect of Changing Values of the Design Variables

From the result of the test, it is shown that all the variances of displacement, velocity and acceleration are constant at each angle of cam rotation (Table for this result were deleted due to its repitition and monotony). This is due to the typical characteristic of the flat faced follower that its pressure angles are always zero through all angles of cam rotation because the contact angle condition is uniform resulting in the constant variance of error. We know that the variances of follower motion error rely significantly upon the condition at the contact point between cam and its follower. This can be also explained by Equation(2.3-12), and Equation (2.4-7) with its partial derivatives from which the variances were calculated.

It may, therefore, be said that the variances of a flat faced follower motion uniquely depends on the tolerances of mechanism and are not greatly affected by the dimensions or as in the case of the roller follower which is analysed in the next section.

2. Analysis of the Effect of Tolerances on the Various Standard Motions.

For this follower type a change in standard motion had no effect on these variances for the reason mentioned in the comparison of the effect of changing the values of the design variables. It can, thus, be concluded that the variances of the motion are only determined by the tolerances in the mechanism and not affected at all by the motion curves or the dimensions of the design variables.

TRANSLATING FLAT FACED FOLLOWER

TOTAL RISE = .75(INCH)
RADIUS OF BASE CIRCLE = 1.50(INCH)
CAM ANGLE FOR RISE = 100.00(DEG.)
RPM = 200.00
INCREMENTAL CAM ANGLE = 1.00(DEG.)
TOLERANCE OF LINK PARTS = .0002(INCH)
TOLERANCE ON COMPONENT OF CAM PROFILE = .0001(INCH)

3-4-5 POLYNOMIAL

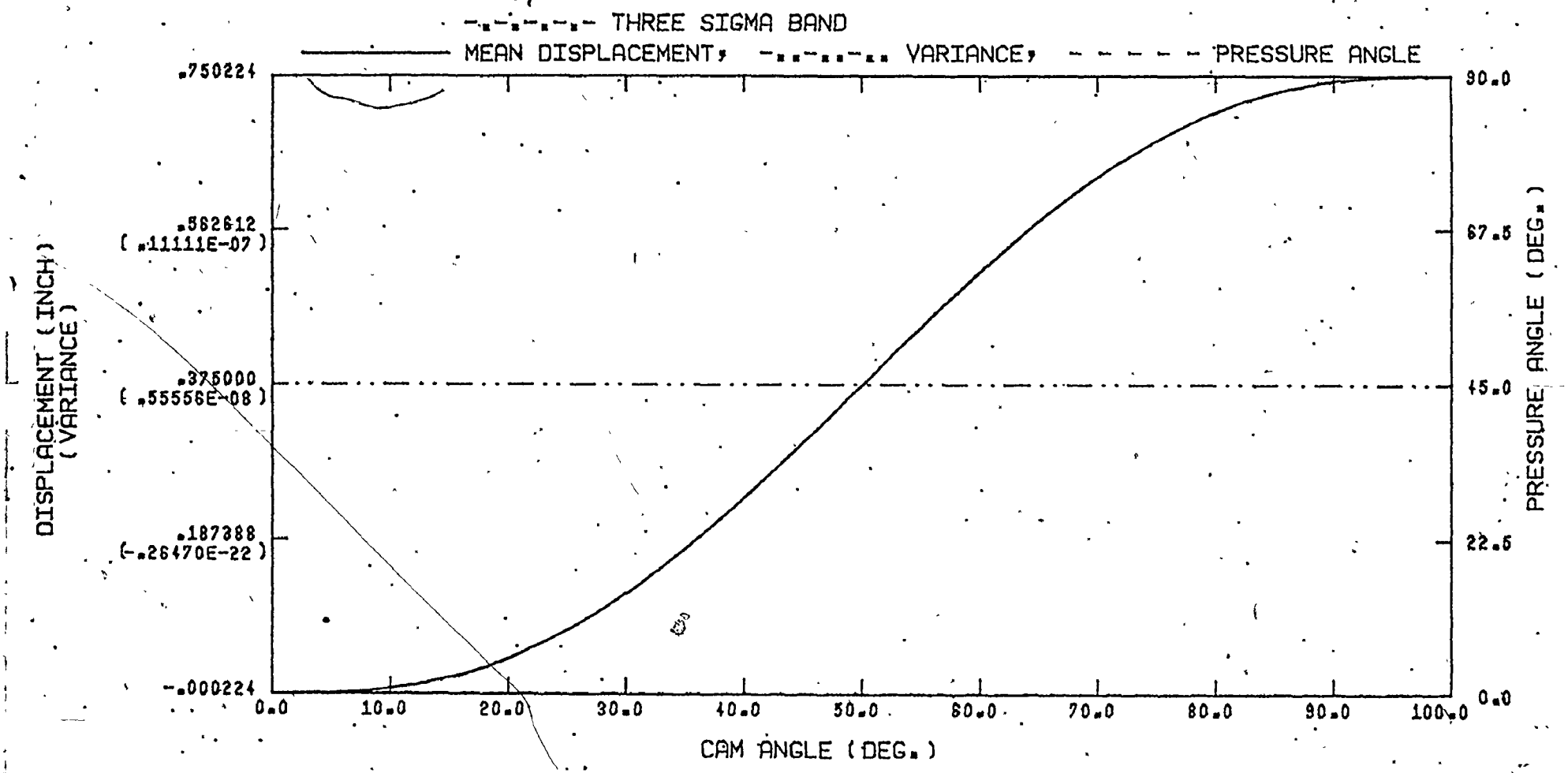

Figure 4.2-1a Displacement Analysis of Translating Flat Faced Follower.

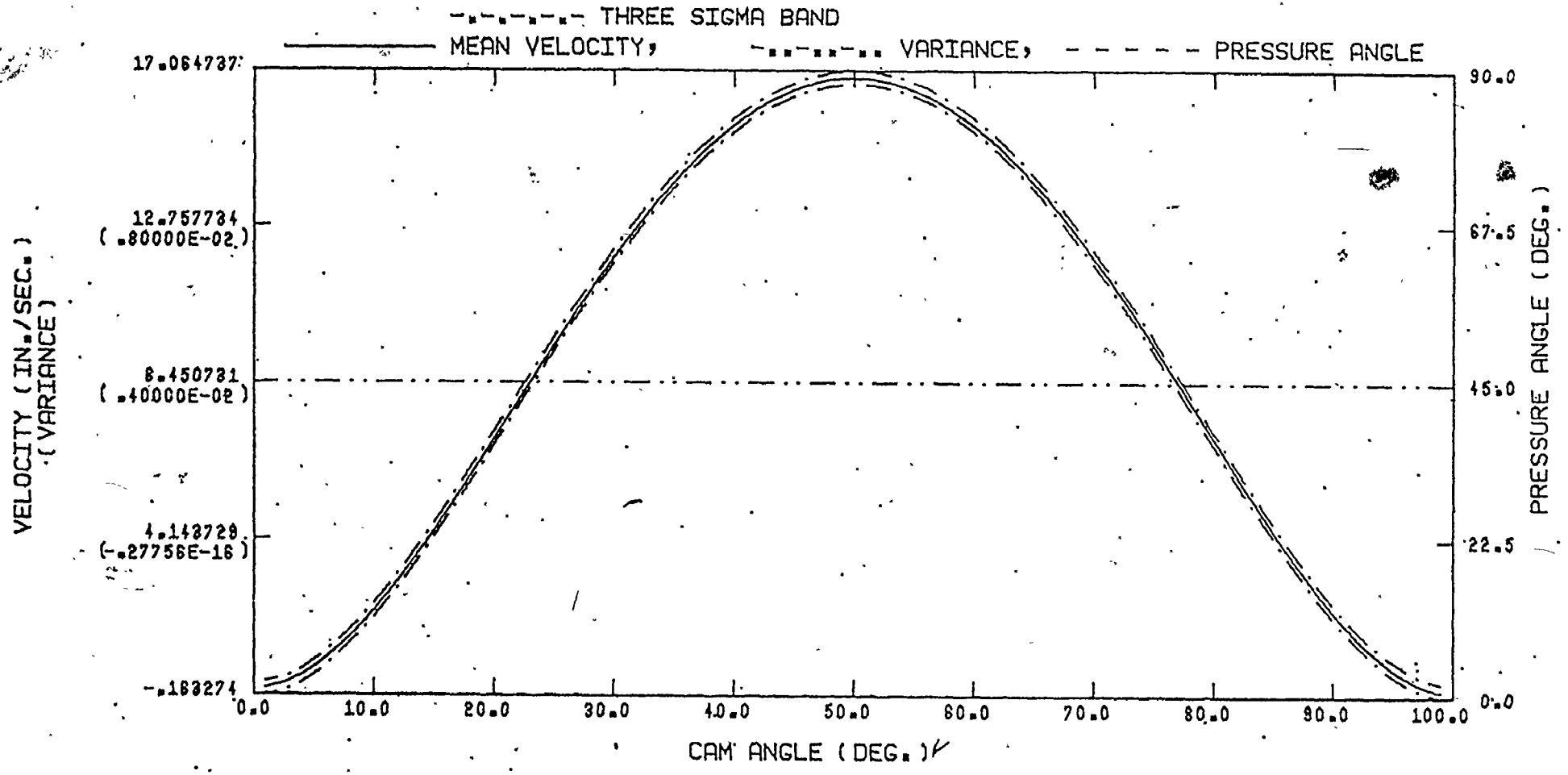

Figure 4.2-1b Velocity Analysis of Translating Flat Faced Follower.

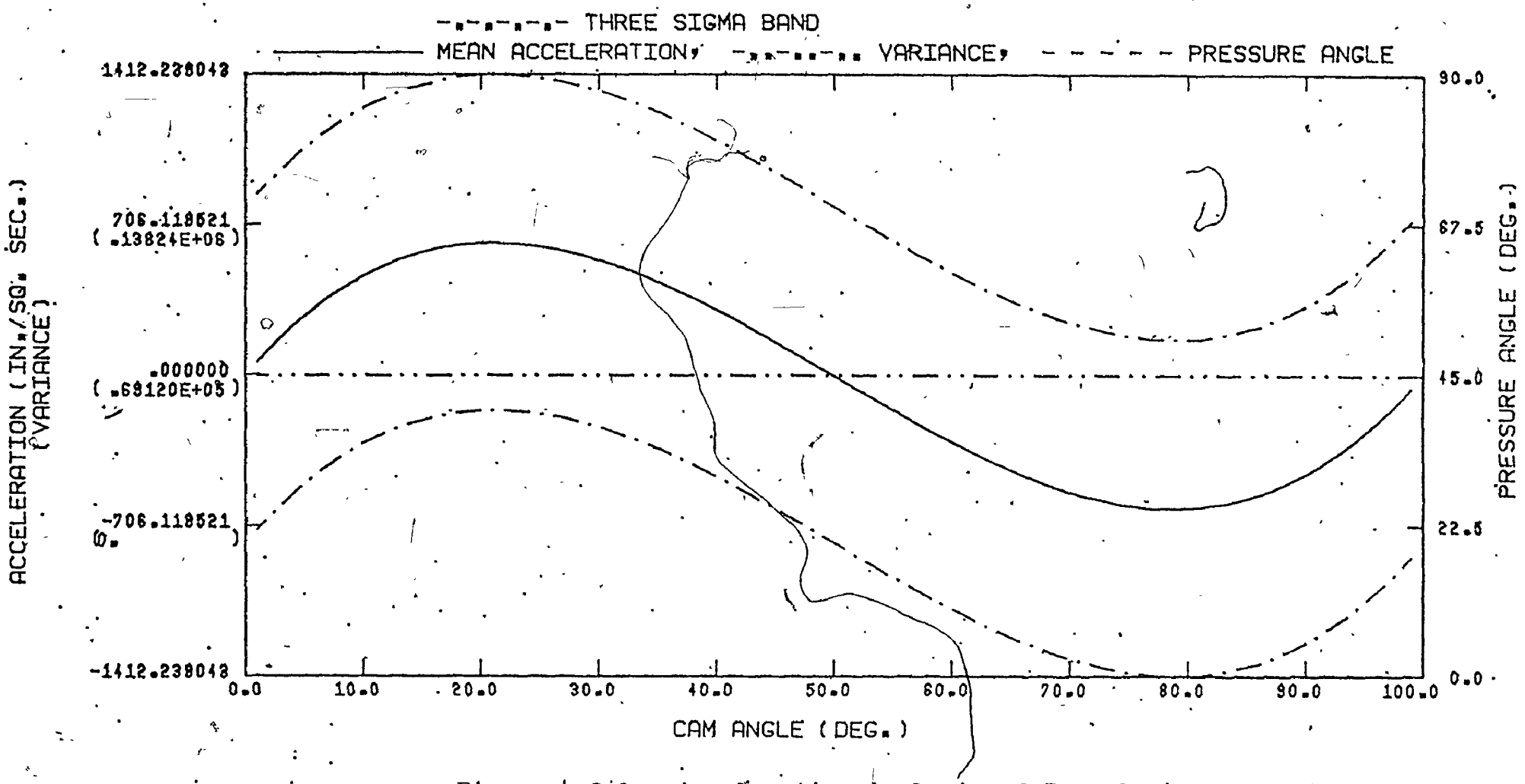

Figure 4.2-1c Acceleration Analysis of Translating Flat Faced Follower.

4.3 Translating In-line Roller Follower

The following specification for a disk cam with an in-line translating roller follower has been taken from "CAMS" by Rothbart[2].

Total Rise	(T.R.)	=	1.0 in.
Radius of Base Circle	(R.B.)	=	0.85 in.
Cam Angle for Rise	(C.R.)	=	150.00 deg.
R.P.M.		=	180
Incremental Cam Angle	(I.A.)	=	1.0 deg.
Roller Radius	(R.R,)	=	0.75 in.
Offset Distance	(O.D.)	=	0.0 in.
Tolerence on Link		=	±0.0002 in.
Tolerance on Cam Profile		=	±0.0001 in.
Standard Motion Curve		=	SHM
Maximum Pressure Angle		=	20 deg.

The above design had been roughly minimized for a pressure angle of 20°, but the actual value calculated by the program was 16.4° which is an exact value since the computer program developed here calculates the cam profile for exact contact conditions between cam and the follower.

1. Analysis of the Effect of Changing Values of the Design Variables.

The results are shown in the Figures 4.3-1a, 4.3-1b and 4.3-1c where displacement, velocity and acceleration graphs are shown with their 3σ bands, and the variance in each of these is plotted on the same graph to different scales. The change in the pressure angle is also plotted on each graph, and it is seen that the maximum values of the variances logically occur at maximum pressure angle for the in-line translating roller follower.

Comparison tests were then carried out by varying the cam specifications or characteristics one at a time. An arbitrary higher and a lower value of each characteristic was used while holding other characteristics constant. The results of these tests are numerically summarized in Tables 4.3-1a and 4.3-1b. The maximum and minimum values of variances were selected from the computer print-outs, and these occurred at some what different cam rotation angles than that of the base problem as indicated. The following phenomina have appeared from the results of comparison:

a) This in-line cam produces the maximum variances of displacement, velocity and accelerationat around maximum pressure angle which occurs at the beginning of the rise.

b) When the total rise decreases, the radius of the pitch circle, the maximum pressure angle and all variances decrease; but the specified values occur later than those of the testing program.

c) The reverse phenomenon occurs when the total rise increases.

d) When the base circle radius decreases, the pitch circle radius also decreases while the maximum pressure angle and all variances increase.

e) As the cam angle for rise decreases, the radius of the pitch circle, the maximum pressure angle and the variances increase, but the cam angles, at which those values occur are smaller than those of basic specification.

f) The angular velocity or rpm of cam does not affect the radius of the pitch circle, pressure angle and the variance of displacement but it has a large effect on the variances of velocity and acceleration; when it decreases, the variances decrease and when it increases, the variances also increase. All specified values, however, are occurring at the same cam rotation angle as in the testing problem.

g) An increase in the roller radius causes a decrease in variances.

A general conclusion is that: smaller pressure angle produces a more exact performance and a bigger cam size yields less error than a smaller one since

a large pitch circle radius reduces the variances. The above mentioned phenomena have been described briefly in Tables 4.3-2a and 4.3-2b.

2. Analysis of the Effect of Tolerances on the Various Standard Motions

The results of the analysis are provided in Tables 4.3-3a and 4.3-3b with the maximum and minimum values. One can find from the results the following features;

1) Maximum pressure angles also arise at the maximum variances of each kinematic characteristic regardless of the motion curve being used.
2) The motion curve, cubic or constant pulse No. 2 is exactly the same as the 2-3 polynomial curve.
3) The cycloidal curve and the trapezoidal curve have alike characteristics at some points;
   a) Radii of both pitch circle are almost the same
   b) Maximum and minimum pressure angles, and their occurrence in both curves are nearly identical.
   c) Maximum and minimum variances of each kinematic characteristic and their appearance are quite similar for both curves.
4) The cubic 1 motion curve yields the largest variance and the straight line the smallest variance for each

kinematic characteristic of the mechanism for the same tolerance. The display of motion curves in the order of the largest variance produced to the smallest is as follows:

1) Cubic or constant pulse No. 1 curve (largest variance)
2) 4-5-6-7 polynomial
3) Cycloidal or sine acceleration curve
4) Trapezoidal accelaration
5) Modified trapezoidal acceleration curve
6) 3-4-5 polynomial
7) Parabolic or constant acceleration curve
8) Double harmonic curve
9) Simple harmonic motion or crank curve
10) Cubic or constant pulse No. 2 curve, 2-3 polynomial
11) Straight line or constant velocity curve (smallest variance)

TRANSLATING ROLLER FOLLOWER

TOTAL RISE	=	1.00(INCH)
RADIUS OF BASE CIRCLE	=	.85(INCH)
CAM ANGLE FOR RISE	=	150.00(DEG.)
RPM	=	180.00
INCREMENTAL CAM ANGLE	=	1.00(DEG.)
ROLLER RADIUS	=	.75(INCH)
OFFSET DISTANCE	=	0.00(INCH)
TOLERANCE OF LINK PARTS	=	.0002(INCH)
TOLERANCE ON COMPONENT OF CAM PROFILE	=	.0001(INCH)

SIMPLE HARMONIC MOTION OR CRANK CURVE

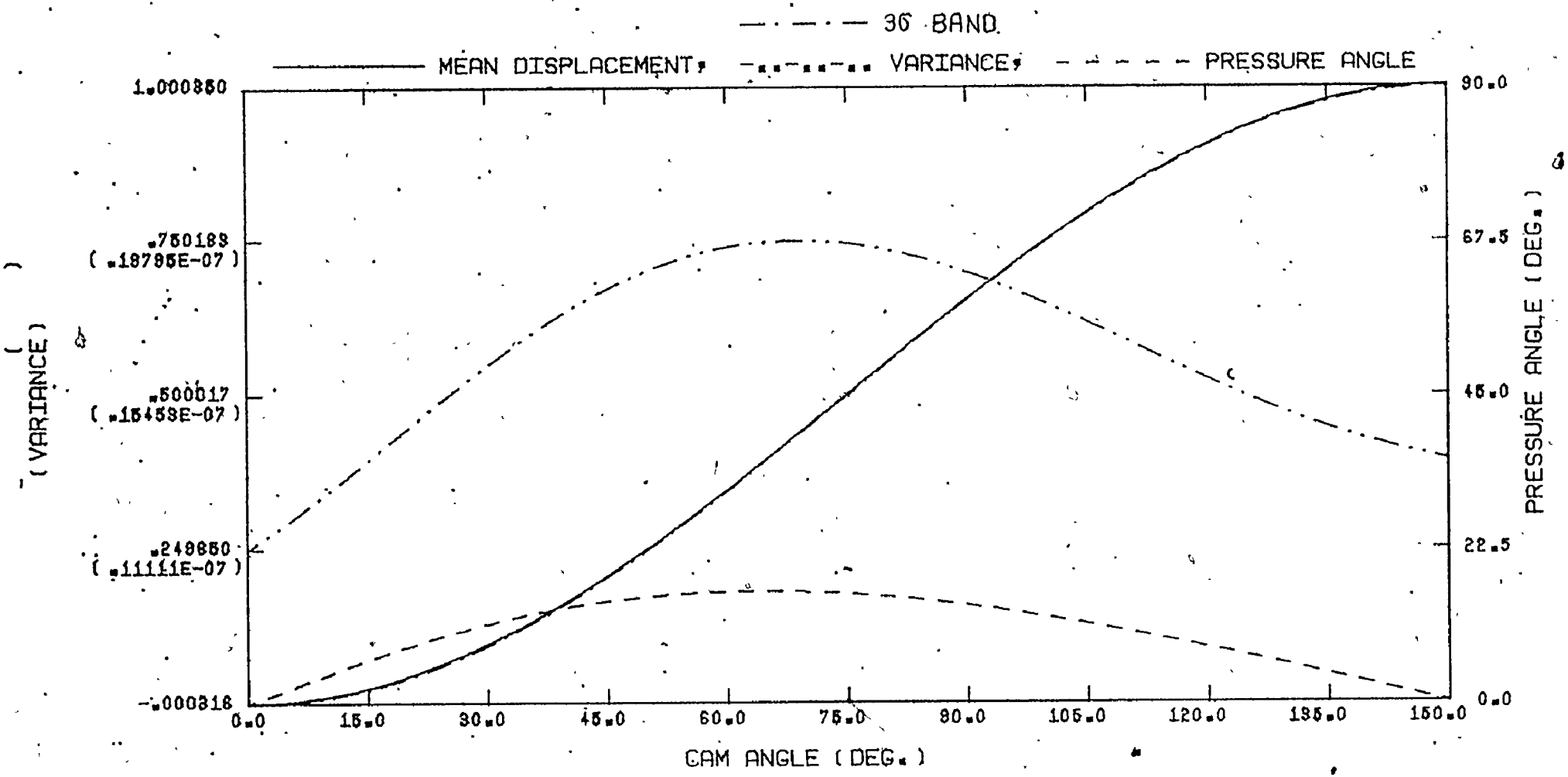

Figure 4.3-1a Displacement Analysis of Translating In-Line Roller Follower

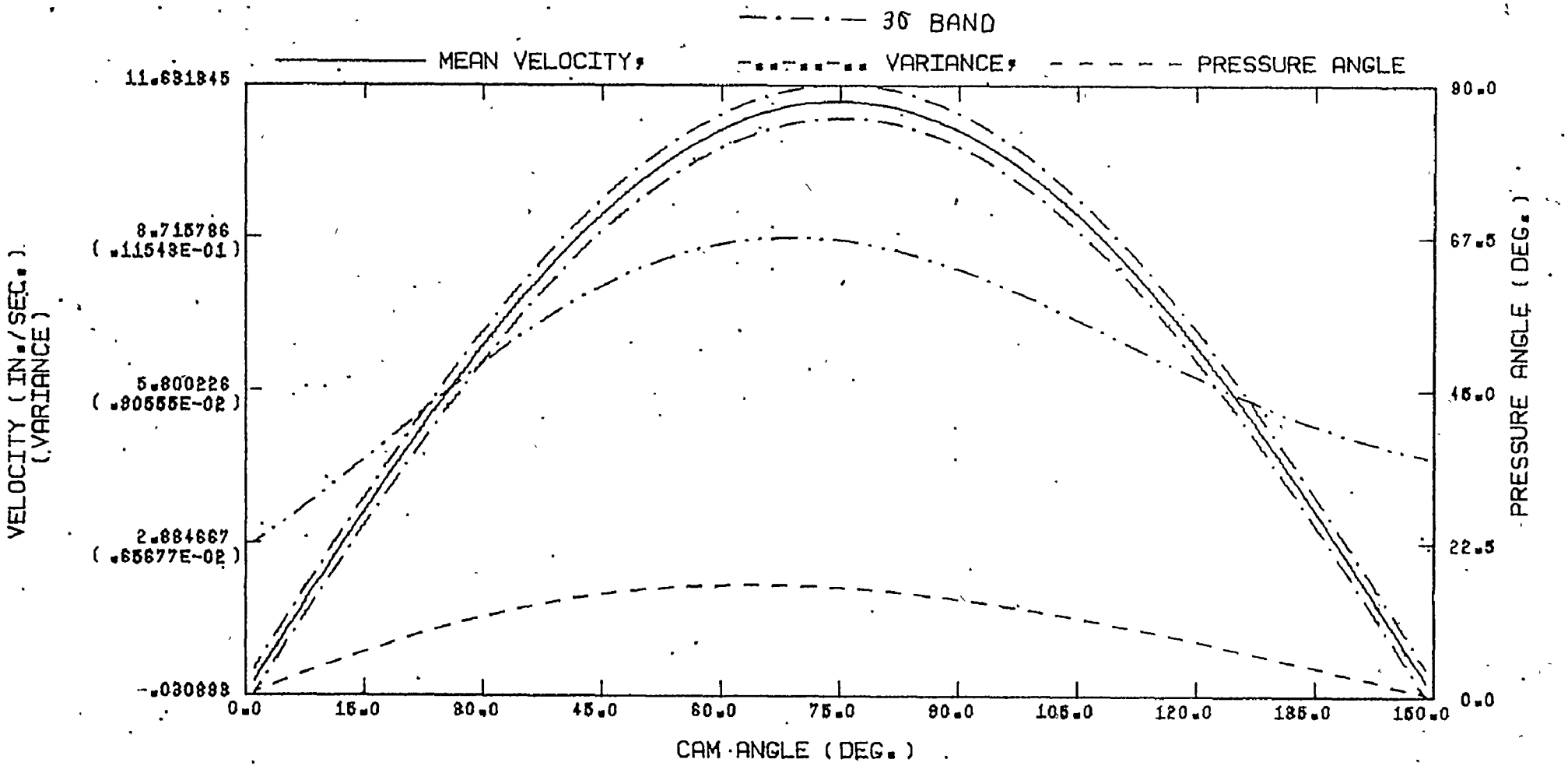

Figure 4.3-1b Velocity Analysis of Translating In-Line Roller Follower

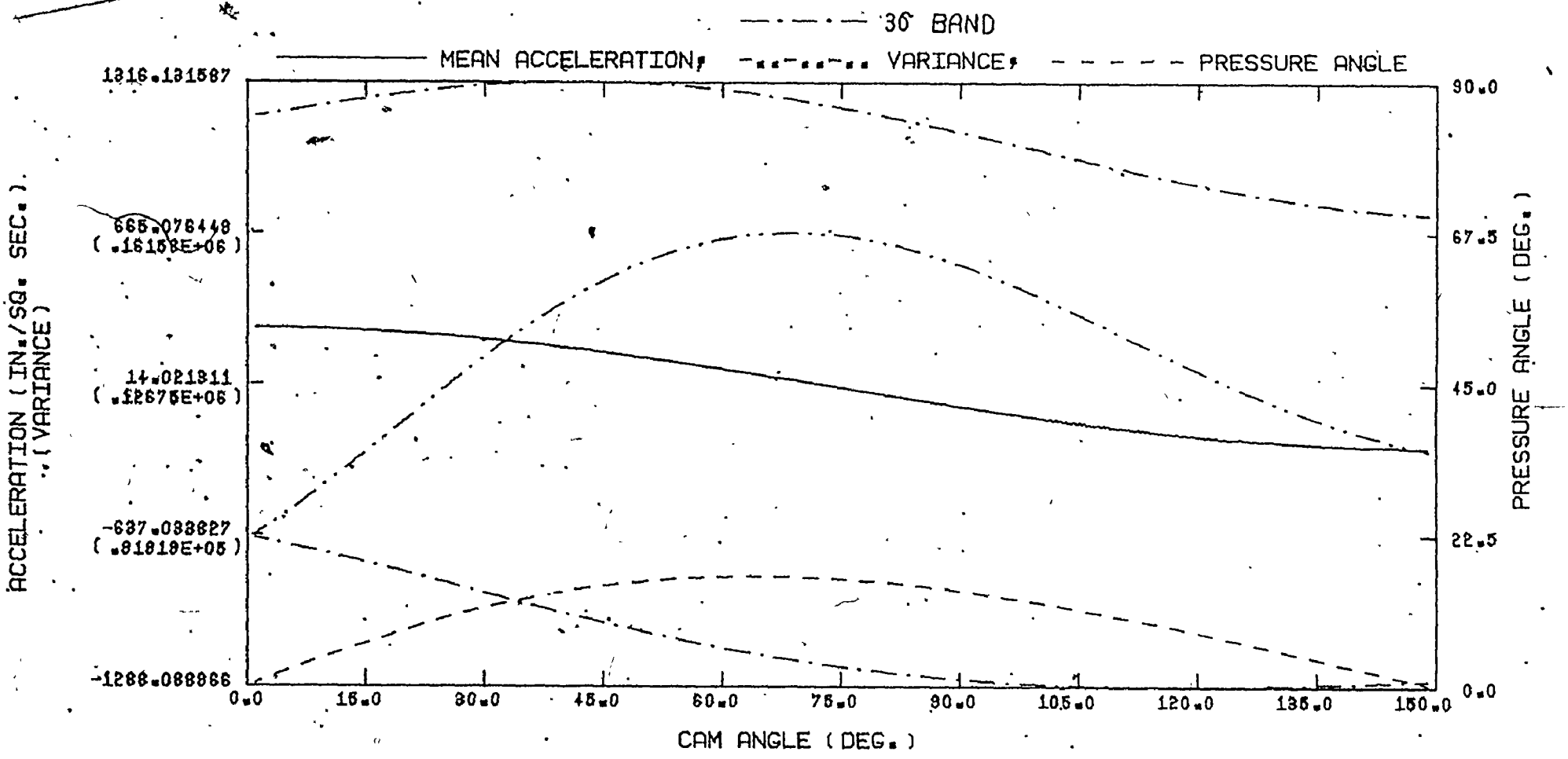

Figure 4.3-1c Acceleration Analysis of Translating In-Line Roller Follower

TABLE 4.3-1a

ANALYSIS OF TRANSLATING IN-LINE ROLLER FOLLOWER IN MAXIMUM VALUES

	Lower and Higher Test Dimn's.	Radius of Pitch Circle		Pressure Angle		Variance of Displacement		Variance of Velocity		Variance of Acceleration	
		C.A deg.	inch	C.A deg.	Max. deg.	C.A deg.	Max. $x10^{-7}$	C.A deg.	Max. $x10^{-2}$	C.A deg.	Max. $x10^{5}$
Basic Dimn.		64	1.2839	64	16.392	68 69	0.19795	68 69	1.1543	68 69	1.6158
T.R.	0.5	69	1.0853	69	9.264	79	0.19152	79	1.1168	79	1.5633
(1.0)	1.5	59	1.4357	59	22.003	60	0.20697	60 61	1.0209	60 61	1.6894
R.B.	0.6	62	1.0329	62	18.617	65 66	0.20104	65 66	1.2069	65 66	1.6410
(0.85)	1.1	65	1.5322	65	14.644	71	0.19592	71	1.1425	71	1.5992
C.R.	120	51	1.3053	51	20.189	59	0.20237	59	1.1801	58	1.6519
(150)	180	76	1.2633	76	13.774	73 74	0.19517	73 74	1.1381	73 74	1.5931
RPM	100	64	1.2839	64	16.392	68 69	0.19795	69	0.3563	68 69	0.1539
(180)	300	64	1.2839	64	16.392	68 69	0.19795	69	3.2065	69	12.4680
R.R.	0.5	62	1.2519	62	18.617	65 66	0.20104	65 66	1.1723	65 66	1.6410
(0.75)	1.0	65	1.3033	65	14.644	71	0.19592	71	1.1425	71	1.5992

* C.A : Cam rotation angle where maximum value occurred.

TABLE 4.3-1b

ANALYSIS OF TRANSLATING IN-LINE ROLLER FOLLOWER

IN MINIMUM VALUES

	Lower and Higher Test Dimn's	Radius of Pitch Circle		Pressure Angle		Variance of Displacement		Variance of Velocity		Variance of Acceleration	
		C.A. deg.	(inch)	C.A. deg.	MIN. deg.	C.A. deg.	MIN. ($\times 10^{-7}$)	C.A. deg.	MIN. ($\times 10^{-2}$)	C.A. deg.	MIN. ($\times 10^{5}$)
Basic Dimn's		64	1.283873	150°	.0	0	0.11111	1	0.65677	1	0.91919
T.R.	0.5	69	1.08529	150°	0	0	0.11111	1	0.65461	1	0.91622
(1.0)	1.5	59	1.43574	150°	0	0	0.11111	1	0.65896	1	0.92218
R.B.	0.6	62	1.03292	150°	0	0	0.11111	1	0.65758	1	0.92029
(0.85)	1.1	65	1.53219	150°	0	0	0.11111	1	0.65618	1	0.91838
C.R.	120	51	1.30527	120°	0	0	0.11111	1	0.65924	1	0.92256
(150)	180	76	1.2633	180°	0	180°	0.11111	179	0.65070	179	0.91081
RPM	100	64	1.28387	150°	0	0	0.11111	1	0.20271	1	0.087562
(180)	300	64	1.28387	150°	0	0	0.11111	1	1.8244	1	0.70925
R.R.	0.5	62	1.25192	150°	0	0	0.11111	1	0.65758	1	0.92029
(0.75)	1.0	65	1.30328	150°	0	0	0.11111	1	0.65618	1	0.91838

* C.A. : Cam rotation angle where minimum values occurred

TABLE 4.3-2a

COMPARISON TO BASIC DIMENSION IN MAXIMUM VALUES

(TRANSLATING IN-LINE ROLLER FOLLOWER)

		Radius of Pitch Circle	Pressure Angle	Variance of Displacement	Variance of Velocity	Variance of Acceleration
Total Rise	Decreased	Dec.	Dec.	Dec.	Dec.	Dec.
	Increased	Inc.	Inc.	Inc.	Inc.	Inc.
Radius of Base Circle	Decreased	Dec.	Inc.	Inc.	Inc.	Inc.
	Increased	Inc.	Dec.	Dec.	Dec.	Dec.
Cam Rotation Angle	Decreased	Inc.	Inc.	Inc.	Inc.	Inc.
	Increased	Dec.	Dec.	Dec.	Dec.	Dec.
RPM	Decreased	Same	Same	Same	Dec.	Dec.
	Increased	Same	Same	Same	Inc.	Inc.
Radius of Roller	Decreased	Dec.	Inc.	Inc.	Inc.	Inc.
	Increased	Inc.	Dec.	Dec.	Dec.	Dec.

Inc. = Increase Dec. = Decrease

TABLE 4.3-2b

COMPARISON TO BASIC DIMENSION IN MINIMUM VALUES
(TRANSLATING IN-LINE ROLLER FOLLOWER)

		Radius of Pitch Circle	Pressure Angle	Variance of Displacement	Variance of Velocity	Variance of Acceleration
Total Rise	Decreased	Dec.	Same	Same	Dec.	Dec.
	Increased	Inc.	Same	Same	Inc.	Inc.
Radius of Base Circle	Decreased	Dec.	Same	Same	Inc.	Inc.
	Increased	Inc.	Same	Same	Dec.	Dec.
Cam Rotation Angle	Decreased	Inc.	Same	Same	Inc.	Inc.
	Increased	Dec.	Same	Same	Dec.	Dec.
RPM	Decreased	Same	Same	Same.	Dec.	Dec.
	Increased.	Same	Same	Same	Inc.	Dec.
Radius of Roller	Decreased	Dec.	Same	Same.	Inc.	Inc.
	Increased	Inc.	Same	Same	Dec.	Dec.

Inc. = Increase Dec. = Decrease

TABLE.4.3-3a

ANALYSIS OF MOTION CURVE EFFECTS FOR TRANSLATING IN-LINE ROLLER FOLLOWER

(BASED ON MAXIMUM VALUES)

Motion Curves	Radius of Pitch Circle (inch)	Pressure Angle C.A.	Pressure Angle (deg.)	Variance of Displcacement C.A.	Variance of Displcacement ($\times 10^{-7}$)	Variance of Velocity C.A.	Variance of Velocity ($\times 10^{-1}$)	Variance of Acceleration C.A.	Variance of Acceleration ($\times 10^{6}$)
Straight Line	0.887751	0.0	13.42704	77	0.19225	77	0.11211	77	0.15692
Parabolic	1.418553	75	19.99051	70	0.20174	70	0.11764	70	0.16467
Cubic.No. 1	1.485730	75	28.62015	70	0.21160	70	0.12337	70	0.17271
Cubic No. 2	1.265900	62	15.74405	69	0.19707	69	0.11492	69	0.16086
SHM	1.283873	64	16.3917	68	0.19795	69	0.11543	69	0.16158
Double Harmonic	1.3758	92	20.25959	74	0.19900	74	0.11603	74	0.16245
Cycloidal	1.3305	68	20.42810	65	0.20392	65	0.11891	65	0.16645
Trapezoidal	1.3303	68	20.39138	66	0.20380	66	0.11883	66	0.16635
Modified Trapezoidal	1.3553	70	20.27041	67	0.20339	67	0.11859	67	0.16601
2-3 Polynomial	1.2659	62	15.74405	69	0.19709	69	0.11492	69	0.16086
3-4-5 Polynomial	1.31634	67	19.28310	66	0.20216	66	0.11788	66	0.16501
4-5-6-7 Polynomial	1.3345	68	22.15628	64	0.20668	64	0.12051	64	0.16870

* C.A. : Cam rotation angle where maximum value occurred (deg.).

TABLE 4.3-3b

ANALYSIS OF MOTION CURVE EFFECTS FOR TRANSLATING OFFSET ROLLER FOLLOWER

(BASED ON MINIMUM VALUES)

Motion Curves	Radius of Pitch Circle (inch)	Pressure Angle C.A.	Pressure Angle (deg.)	Variance of Displcacement C.A.	Variance of Displcacement ($\times 10^{-7}$)	Variance of Velocity C.A.	Variance of Velocity ($\times 10^{-2}$)	Variance of Acceleration C.A.	Variance of Acceleration ($\times 10^{5}$)
Straight Line.	0.887751	$^{0}_{150}$	0.0	150	0.12059	149	0.70887	149	0.99213
Parabolic	1.418553	$^{0}_{150}$	0.0	0	0.11111	1	0.65595	1	0.91806
Cubic No. 1	1.48573	$^{0}_{150}$	0.0	0	0.11111	1	0.65263	1	0.31342
Cubic No. 2	1.26590	$^{0}_{150}$	0.0	0	0.11111	1	0.65764	1	0.92041
SHM	1.283873	$^{0}_{150}$	0.0	0	0.11111	1	0.65677	1	0.91919
Double Harmonic	1.3758	$^{0}_{150}$	0.0	0	0.11111	1	0.65249	1	0.91329
Cycloidal	1.3305	$^{0}_{150}$	0.0	0	0.11111	1	0.65271	1	0.91350
Trapezoidal	1.3303	$^{0}_{150}$	0.0	0	0.11111	1	0.65273	1	0.91352
Modified Trapezoidal	1.3553	$^{0}_{150}$	0.0	0	0.11111	1	0.65284	1	0.91361
2-3 Polynomial	1.2659	$^{0}_{150}$	0.0	0	0.11111	1	0.65764	1	0.92041
3-4-5 Polynomial	1.31634	$^{0}_{150}$	0.0	0	0.11111	1	0.65282	1	0.91331
4-5-6-7 Polynomial	1.3345	$^{0}_{150}$	0.0	0	0.11111	1	0.65251	1	0.91331

* C.A. : Cam rotation angle where maximum value occurred (deg.).

4.4 Translating Offset Roller Follower

An example of a disk cam actuated by a translating roller follower having the following specification was taken from Robert G. Fenton [34] and minimized for a 30° pressure angle by his cam size minimizing method.

Total Rise	(T.R.)	=	1.2 in.
Radius of the base circle	(R.B.)	=	0.71 in.
Cam angle for rise	(C.R.)	=	80.00 deg.
RPM		=	470
Incremental Cam Angle	(I.A.)	=	1.0 deg.
Roller Radius	(R.R.)	=	0.5 in.
Offset Distance	(O.D.)	=	0.605 in.
Tolerance on Link		=	±0.0002 in.
Tolerance on Cam Profile		=	±0.0001 in.
Standard Motion Curve		=	Cycloidal
Maximum Pressure angle		=	30 deg.

The exact maximum pressure angle calculated by the computer program was 30.08°.

1. Analysis of the Effect of Changing Values of the Design Variables

The results are shown in the Figures 4.4-1a, 4.4-1b and 4.4-1c. The same type of comparison tests were performed as

for the previous Section 4.3 and the results are summarized in Table 4.4-1a and 4.4-1b. As a result of this comparison phenomena similar to the case of in-line roller follower were observed and are as follows:

a) The maximum variances of displacement, velocity and acceleration occur at the maximum pressure angle like the in-line follower cam, but the minimum variances do not occur at the minimum pressure angle.

b) As the total rise decreases, the pitch circle radius, the maximum pressure angle and the maximum variances increase with the larger cam angle than those of basic specification. The opposite situation occurs for a rise increase.

c) As the base circle radius is decreased, the pitch circle radius also decreases while the maximum pressure angle and all variances increase. Maximum and minimum values occur at the same cam angles as those of the standard problem.

e) When the cam angle for rise is decreased to 60°, the maximum pressure angle exceeds 45° making cam motion impossible, but as the cam angle for rise is increased the pitch circle radius, the pressure angles and the variances decrease. The maximum occurances arise at the beginning of the rise and the minimum at the end of rise.

f) The angular velocity or rpm has no effect on the pitch circle radius, the pressure angle and the variance of displacement, but greately effects the variances of velocity and acceleration.

g) Variation of the roller radius produces similar results to the base circle radius except that when it is decreased, the maximum variances occur at the beginning of the rise.

h) When the offset distance is decreased, the pressure angle and all variances decrease with the increased pitch circle radius and vice versa.

It was generally observed that a smaller pressure angle produces a more exact performance and a bigger cam size yields less error than a smaller one, since the large pitch circle radius reduces the variances. This is same as the case of an in-line roller follower.

The above mentioned phenomena have been described briefly in Tables 4.4-2a and 4.4-2b.

2. Analysis of the Effect of Tolerances on the Various Standard Motions

Similar features occur as for the case of the In-Line roller follower, except for a slight change in the order of motion curves, are shown in the results which are obtained by

TRANSLATING ROLLER FOLLOWER

TOTAL RISE	=	1.20(INCH)
RADIUS OF BASE CIRCLE	=	.71(INCH)
CAM ANGLE FOR RISE	=	90.00(DEG.)
RPM	=	470.00
INCREMENTAL CAM ANGLE	=	1.00(DEG.)
ROLLER RADIUS	=	.50(INCH)
OFFSET DISTANCE	=	.61(INCH)
TOLERANCE OF LINK PARTS	=	.0002(INCH)
TOLERANCE ON COMPONENT OF CAM PROFILE	=	.0001(INCH)

CYCLOIDAL OR SINE ACCELERATION CURVE

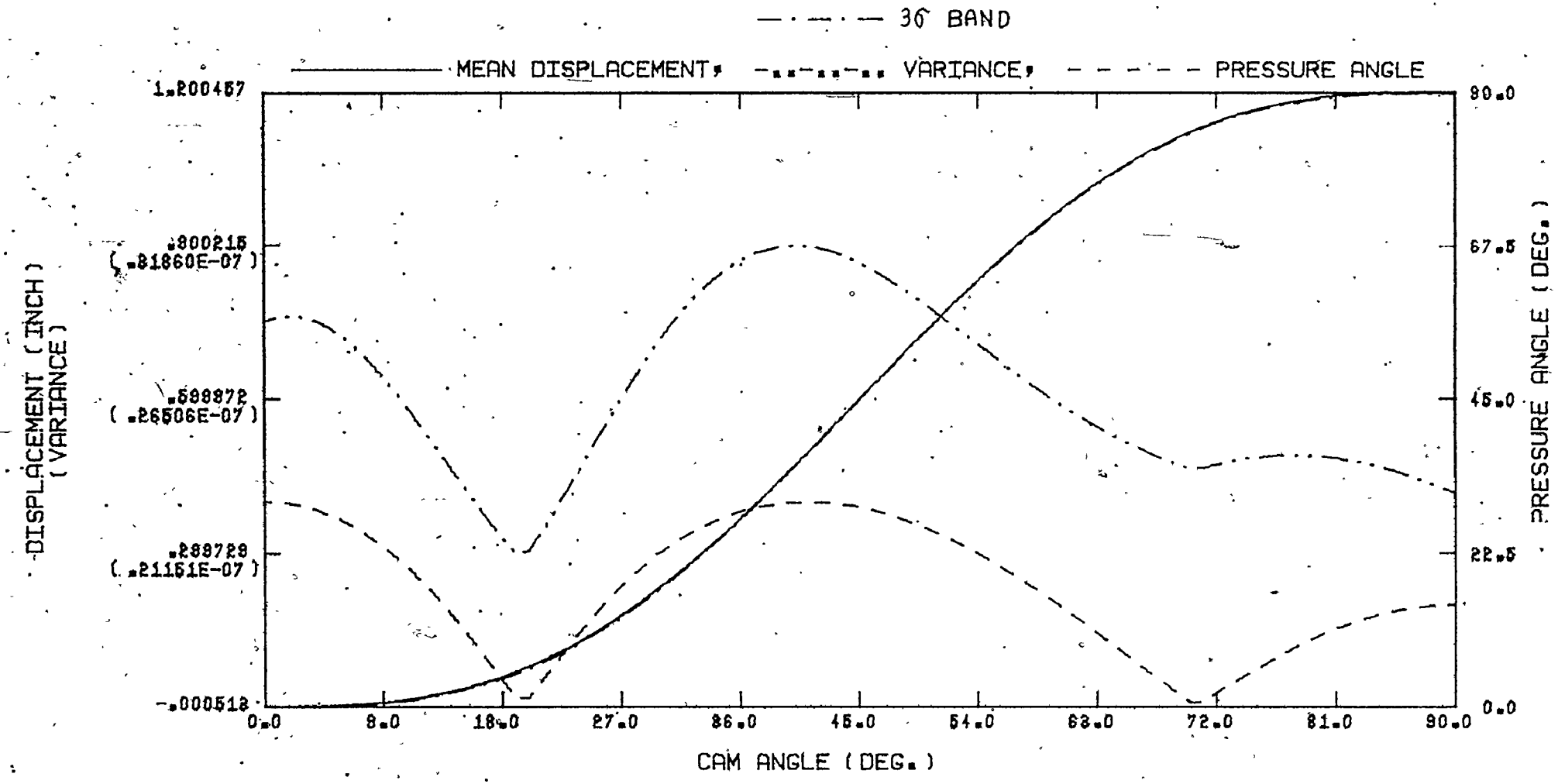

Figure 4.4-1a Displacement Analysis of Translating Offset Follower.

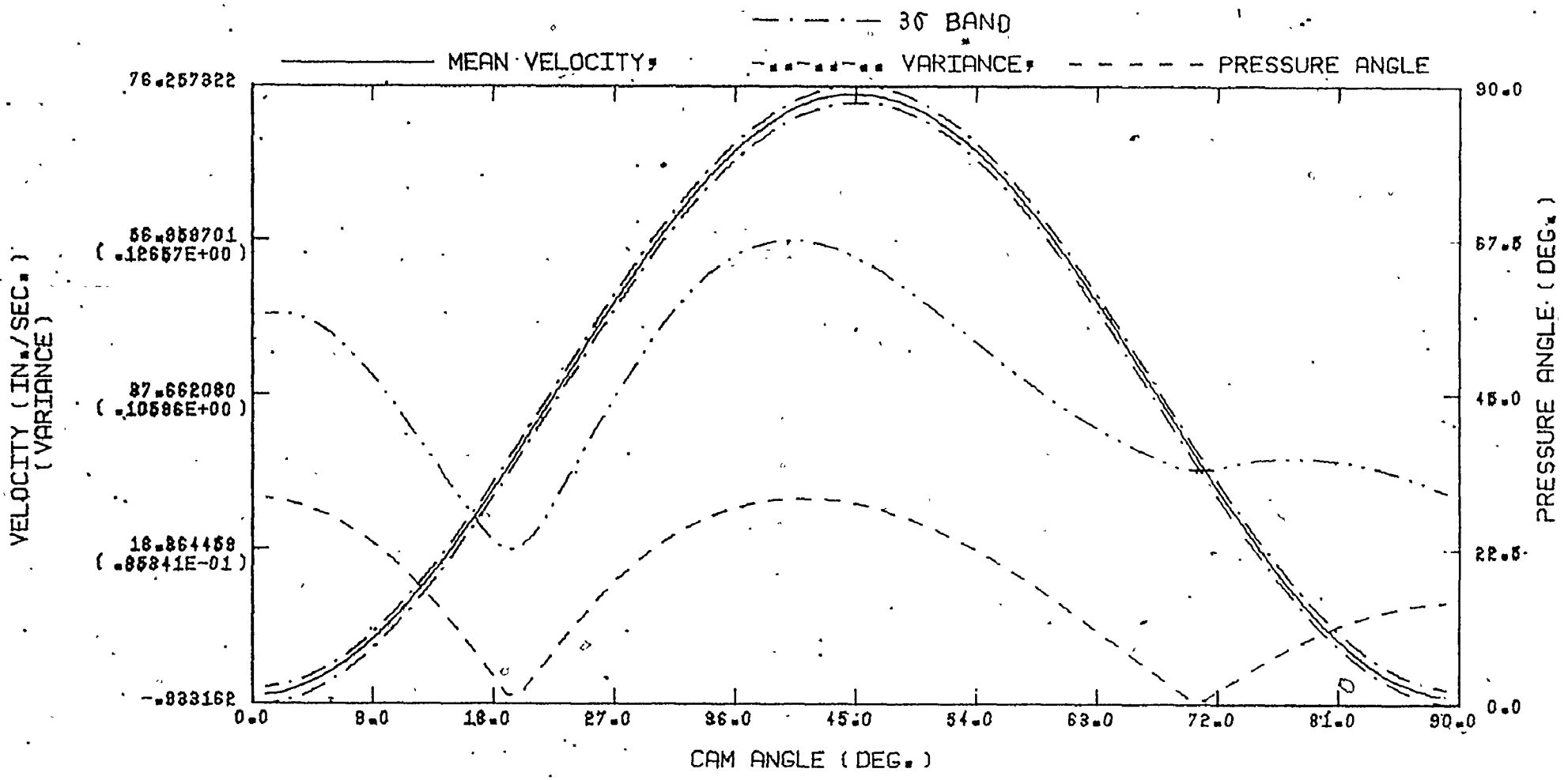

Figure 4.4-1b Velocity Analysis of Translating Offset Roller Follower

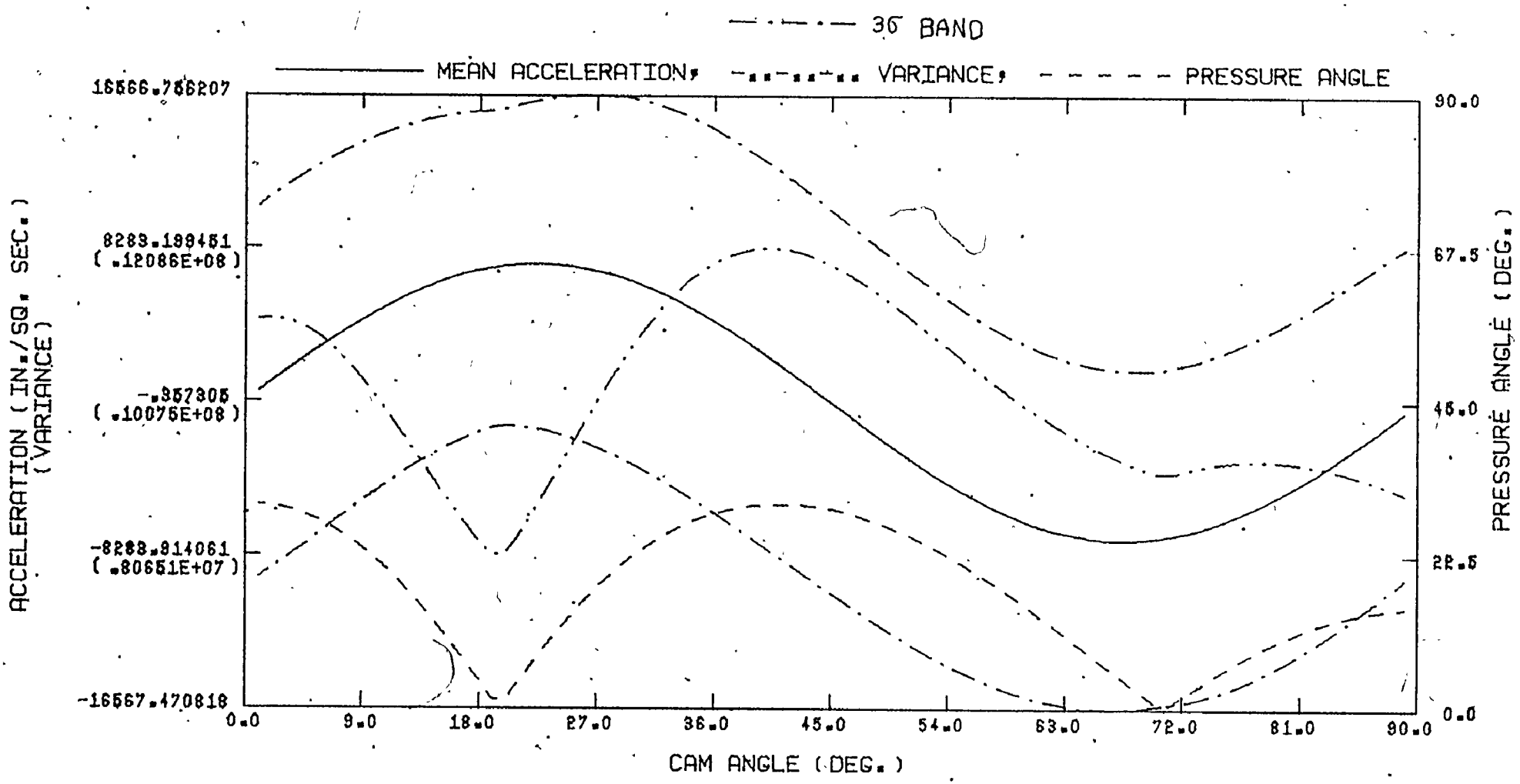

Figure 4.4-1c Acceleration Analysis of Translating Offset Roller Follower

TABLE 4.4-1a

ANALYSIS OF TRANSLATING OFFSET ROLLER FOLLOWER

IN MAXIMUM VALUES

	Lower and Higher Test Dimn's	Radius of Pitch Circle		Pressure Angle		Variance of Displacement		Variance of Velocity		Variance of Acceleration	
		C.A. deg.	(inch)	C.A. deg.	MAX deg.	C.A. deg.	MAX ($\times 10^{-7}$)	C.A. deg.	MAX ($\times 10^{-1}$)	C.A. deg.	MAX ($\times 10^{7}$)
Basic Dimn's		41	1.1645	41	30.085	40	0.31860	40	1.2657	40	1.2086
T.R.	0.7	0	0.7100	0	30.000	3	0.29538	3	1.1733	3	1.1204
(1.2)	1.7	39	1.3272	39	41.200	37	0.38698	37	1.5367	37	7.4677
R.B.	0.6	0	0.6000	0	33.367	39	0.34942	39	1.3889	39	1.3254
(0.71)	0.9	41	1.3644	41	26.956	41	0.28378	41	1.1275	41	1.0765
C.R.	60			23	45.250		Not Workable				
(90)	120	0	0.7100	0	30.000	4	0.29628	4	1.1772	4	1.1239
RPM	280	41	1.1645	41	30.085	40	0.31860	40	0.4920	40	0.1521
(470)	650	41	1.1645	41	30.085	40	0.31860	40	2.4208	40	4.4211
R.R.	0.25	0	0.7100	0	39.065	1	0.42280	1	1.6777	1	1.6032
(0.5)	0.75	42	1.4576	42	26.109	41	0.27573	41	1.0955	41	1.0460
O.D.	0.5	41	1.4287	41	32.027	40	0.30133	40	1.1971	40	1.1430
(0.605)	0.8	0	0.7100	0	41.388	2	0.46832	2	1.8590	2	1.7760

* C.A. : Cam rotation angle where maximum value occurred.

TABLE 4.4-1b

ANALYSIS OF TRANSLATING OFFSET ROLLER FOLLOWER

IN MINIMUM VALUES

	Lower and Higher Test Dimn's	Radius of Pitch Circle		Pressure Angle		Variance of Displacement		Variance of Velocity		Variance of Acceleration	
		C.A. deg.	(inch)	C.A. deg.	MAX deg.	C.A. deg.	MAX ($\times 10^{-7}$)	C.A. deg.	MAX ($\times 10^{-1}$)	C.A. deg.	MIN ($\times 10^{7}$)
Basic Dimn's		41	1.1645	71	0.6800	19	0.21151	19	0.85341	19	0.80651
T.R.	0.7	0	0.7100	62	0.2656	28	0.21636	27	0.86738	28	0.82400
(1.2)	1.7	39	1.3272	74	0.0602	16	0.20651	15	0.84610	16	0.79320
R.B.	0.6	0	0.6000	71	0.7230	19	0.22898	19	0.92507	19	0.87350
(0.71)	0.9	41	1.3644	71	0.6190	19	0.19216	19	0.77400	19	0.73230
C.R.	60				Not		Workable				
(90)	120	0	0.7100	89	0.0553	120	0.1624	119	0.65611	119	0.62604
RPM	280	41	1.1645	71	0.6800	19	0.21151	19	0.30290	19	0.10160
(470)	650	41	1.1645	71	0.6800	19	0.21151	19	1.6323	19	2.95030
R.R.	0.25	0	0.7100	71	0.7895	16	0.26548	16	1.0748	16	1.01340
(0.5)	0.75	42	1.45756	71	0.6023	19	0.18774	19	0.75588	19	0.71536
O.D.	0.50	41	1.4287	73	0.5656	17	0.18602	17	0.75149	17	0.70960
(0.605)	0.80	0	0.7100	67	0.2702	90	0.28751	89	1.15420	89	1.10150

* C.A. : Cam rotation angle where maximum value occurred.

TABLE 4.4-2a

COMPARISON TO BASIC DIMENSION IN MAXIMUM VALUES

(TRANSLATING OFFSET ROLLER FOLLOWER)

		Radius of Pitch Circle	Pressure Angle	Variance of Displacement	Variance of Velocity	Variance of Acceleration
Total Rise	Decreased	Dec.	Dec.	Dec.	Dec.	Dec.
	Increased	Inc.	Inc.	Inc.	Inc.	Inc.
Radius of Base Circle	Deereased	Dec.	Inc.	Inc.	Inc.	Inc.
	Increased	Inc.	Dec.	Dec.	Dec.	Dec.
Cam Rotation Angle	Decreased		Not Comparable.			
	Increased	Dec.	Dec.	Dec.	Dec.	Dec.
RPM	Decreased	Same	Same	Same	Dec.	Dec.
	Increased	Same	Same	Same	Inc.	Inc.
Radius of Roller	Decreased	Dec.	Inc.	Inc.	Inc.	Inc.
	Increased	Inc.	Dec.	Dec.	Dec.	Dec.
Offset Distanoe	Decreased	Inc.	Inc.	Dec.	Dec.	Dec.
	Increased	Dec.	Inc.	Inc.	Inc.	Inc.

Inc. = Increase Dec. = Decrease

TABLE 4.4-2b

COMPARISON TO BASIC DIMENSION IN MINIMUM VALUES

(TRANSLATING OFFSET ROLLER FOLLOWER)

		Radius of Pitch Circle	Pressure Angle	Variance of Displacement	Variance of Velocity	Variance of Acceleration
Total Rise	Decreased	Dec.	Dec.	Inc.	Inc.	Inc.
	Increased	Inc.	Dec.	Dec.	Dec.	Dec.
Radius of Base Circle	Decreased	Dec.	Inc.	Inc.	Inc.	Inc.
	Increased	Inc.	Dec.	Dec.	Dec.	Dec.
Cam Rotation Angle	Decreased		Not	Comparable		
	Increased	Dec.	Dec.	Dec.	Dec.	Dec.
RPM	Decreased	Same	Same	Same	Dec.	Dec.
	Increased	Same	Same	Same	Inc.	Inc.
Radius of Roller	Decreased	Dec.	Inc.	Inc.	Inc.	Inc.
	Increased	Inc.	Dec.	Dec.	Dec.	Dec.
Offset Distance	Decreased	Inc.	Dec.	Dec.	Dec.	Dec.
	Increased	Dec.	Dec.	Inc.	Inc.	Inc.

Inc. = Increase Dec. = Decrease

TABLE 4.4-3a

ANALYSIS OF MOTION CURVE EFFECTS FOR TRANSLATING OFFSET ROLLER FOLLOWER
(BASED ON MAXIMUM VALUES)

Motion Curves	Radius of Pitch Circle	Pressure Angle		Variance of Displacement		Variance of Velocity		Variance of Acceleration	
	(inch)	C.A.	(deg.)	C.A.	($\times 10^{-7}$)	C.A.	($\times 10^{0}$)	C.A.	($\times 10^{8}$)
Straight Line	0.76638	0	8.62486	65	0.24573	65	0.097701	65	0.09324
Parabolic	0.71	0	30.00000	45	0.31256	45	0.122800	45	0.11813
Cubic 1				Not	Workable				
Cubic 2	0.71	0	30.0000	0	0.29259	1	0.11256	1	0.10734
SHM	0.71	0	30.0000	0	0.29259	1	0.11324	1	0.10804
Double Harmonic	0.71	0	30.0000	53	0.30679	53	0.1219	53	0.11638
Cycloidal	1.1645	41	30.0850	40	0.31860	40	0.12657	40	0.12086
Trapezoidal	1.1644	41	30.01216	40	0.31803	40	0.12633	40	0.12003
Modified Trapezoidal	0.7100	0	30.0000	42	0.31646	42	0.12568	42	0.12003
2-3 Polynomial	0.7100	0	30.0000	0	0.29259	1	0.11256	1	0.10734
3-4-5 Polynomial	0.7100	0	30.0000	40	0.30703	40	0.12200	40	0.11647
4-5-6-7 Polynomial	1.16358	41	33.82963	41	0.33692	41	0.13382	41	0.12780

* C.A. : Cam rotation angle where maximum value occurred (deg.).

TABLE 4.4-3b

ANALYSIS OF MOTION CURVE EFFECTS FOR TRANSLATING OFFSET ROLLER FOLLOWER

(BASED ON MINIMUM VALUES)

Motion Curves	Radius of Pitch Circle (inch)	Pressure Angle C.A.	Pressure Angle (deg.)	Variance of Displacement C.A.	Variance of Displacement (x 10)	Variance of Velocity C.A.	Variance of Velocity (x 10)	Variance of Acceleration. C.A.	Variance of Acceleration. ($x 10^7$)
Straight Line	0.76638	90	4.04454	0	0.21052	1	0.84081	1	0.80241
Parabolic	0.71	72	0.16388	18	0.20845	18	0.84115	18	0.79487
Cubic No. 1				Not	Workable				
Cubic No. 2	0.71	76	0.07655	14	0.20491	14	0.82886	14	0.78199
SHM	0.71	75	0.13217	14	0.20924	14	0.83265	14	0.79415
Double Harmonic	0.71	32	0.03743	32	0.21868	32	0.88917	32	0.83601
Cycloidal	1.1645	71	0..68	19	0.21151	19	0.85341	19	0.80651
Trapezoidal	1.1644	71	0.01308	19	0.20862	19	0.84993	19	0.79809
Modified Trapezoidal	0.71	71	0.36	19	0.21009	19	0.84803	19	0.80121
2-3 Polynomial	0.71	76	0.07655	14	0.20491	14	0.82886	14	0.78199
3-4-5 Polynomial	0.71	72	0.48108	18	0.20984	18	0.84866	18	0.80077
4-5-6-7 Polynomial	1.16358	69	0.1909	21	0.21095	21	0.86391	21	0.80843

* C.A. : Cam rotation angle where maximum value occurred (deg.).

analysis and summarized in the Tables 4.4-3a and 4.4-3b.

The change in the order of the motion curves happens between the parabolic curve and the 3-4-5 polynomial. The variances caused by the parabolic curve is greater than that by the 3-4-5 polynomial in this offset roller follower cam resulting the exchange of their position in the order shown in the previous list.

4.5 Oscillating Roller Follower

As the oscillating follower is not so strictly limited by pressure angle as the translating roller follower, the specifications for this cam were some what roughly determined and shown below:

Total Sweep	(T.S.)	= 30 deg.
Cam Angle for Rise	(C.R.)	= 150 deg.
RPM		= 300
Incremental Cam Angle	(I.A.)	= 1.0 deg.
Roller Radius	(R.R.)	= 0.5 in.
Horizontal Offset	(H.O.)	= 4.0 in.
Vertical Offset	(V.O.)	= 3.0 in.
Arm Length	(A.L.)	= 3.5 in.
Tolerance on Link		= ±0.002 in.

Tolerence on Cam Profile = ±0.001 in.

Standard Motion Curve = 4-5-6-7 Polynomial.

Based on the smoother motion of the follower than of the translating roller follower, the tolerances were to some extent relaxed differently from those of the latter, and it is to be noted that a tolerance of ± 0.001 was used on the profile instead of ±0.0001 to observe the effect of a larger tolerance.

Note that a radius of base circle of this cam is not necessarily provided since the arm length and the roller radius are given, the radius of it is automatically calculated later as an output of the computer program prepared in Appendix D.

1. Analysis of the Effect of Changing Values of the Design Variables.

The results are shown in the Figures 4.5-1a, 4.5-1b and 4.5-1c. The same type of comparison tests were performed as for the previous Articles, and the results are summarized numerically in Tables 4.5-1a and 4.5-1b.

The following tendencies for the motion of an oscillating roller follower were observed.

a) The maximum and the minimum variances of displacement, velocity and acceleration occur respectively at the maximum and the minimum pressure angle like the previous case of the translating in- line roller follower.

b) As the total sweep decreases, the radius of the pitch circle, the pressure angle and the variances decrease except the base circle radius which remains invariable. When the sweep increases to 45° the cam will not work because the pressure angle has exceeded 89°.

c) For the variation of the cam rotation angle, the base circle radius remains invariable. As the angle decreases, the pitch circle radius decreases while the pressure angle and the variances increase.

d) Similarly for the translating roller case, the angular velocity or the rpm has no effect on the pitch circle radius, the pressure angle and the displacement variance but has a large effect on the variances of velocity and acceleration.

e) Variation of the roller radius produces different effects than those of translating roller follower; the variances remain invariable regardless of the radius variations. As the radius decreases, the base circle radius and the pitch circle radius increase with the decreased pressure angle.

f) When decreased, the horizontal offset makes the maximum values of all factors.

g) As the vertical offset decreased to 2" from 3", the pressure angle exceeded 89° rendering this cam immobile. As it increased, the radii of the base circle and the pitch circle increase with the decreased pressure angle and variances.

h) The variation of arm length produces similar results to the horizontal offset except the radius of the base circle which increases as the length increases.

General observations show that in common with the translating roller follower where a small pressure angle yields a good performance of follower motion reducing the variances.

The above mentioned phenomena have been described briefly in Tables 4.5-2a and 4.5-2b.

2. Analysis of the Effect of Tolerances on the Various Standard Motion

As shown in Table 4.5-3a and 4.5-3b, the effects on on various motion curves for this oscillating cam are also given as for the preceeding two types of translating rolller followers. But the order of motion curves for the magnitude of variance resulting from them is dramatically opposed. Here the straight line produces the largest variance while the cubic 1 motion curve the smallest variance. The curves are listed below in order of the largest variances produced:

1. Straight line or constant velocity curve (largest variance)
2. Double harmoniccurve
3. Cubic or constant pulse No. 2 curve 2-3 polynomial
4. Simple harmonic curve
5. Modified trapezoidal acceleration curve
6. Trapezoidal acceleration curve
7. Parabolic or constant acceleration curve
8. 3-4-5 polynomial
9. 4-5-6-7 polynomial
10. Cycloidal or sine acceleration curve
11. Cubic or constant pulse No. 1 curve (smallest variance)

OSCILLATING ROLLER FOLLOWER

TOTAL SWEEP	=	30.00(DEG.)
OFFSET DISTANCE	=	4.00(INCH)
VERTICAL OFFSET	=	3.00(INCH)
FOLLOWER ARM LENGTH	=	3.50(INCH)
CAM ANGLE FOR SWEEP	=	150.00(DEG.)
RPM	=	300.00
INCREMENTAL CAM ANGLE	=	1.00(DEG.)
ROLLER RADIUS	=	.50(INCH)
TOLERANCE OF LINK PARTS	=	.0020(INCH)
TOLERANCE ON COMPONENT OF CAM PROFILE	=	.0010(INCH)

4-5-6-7 POLYNOMIAL

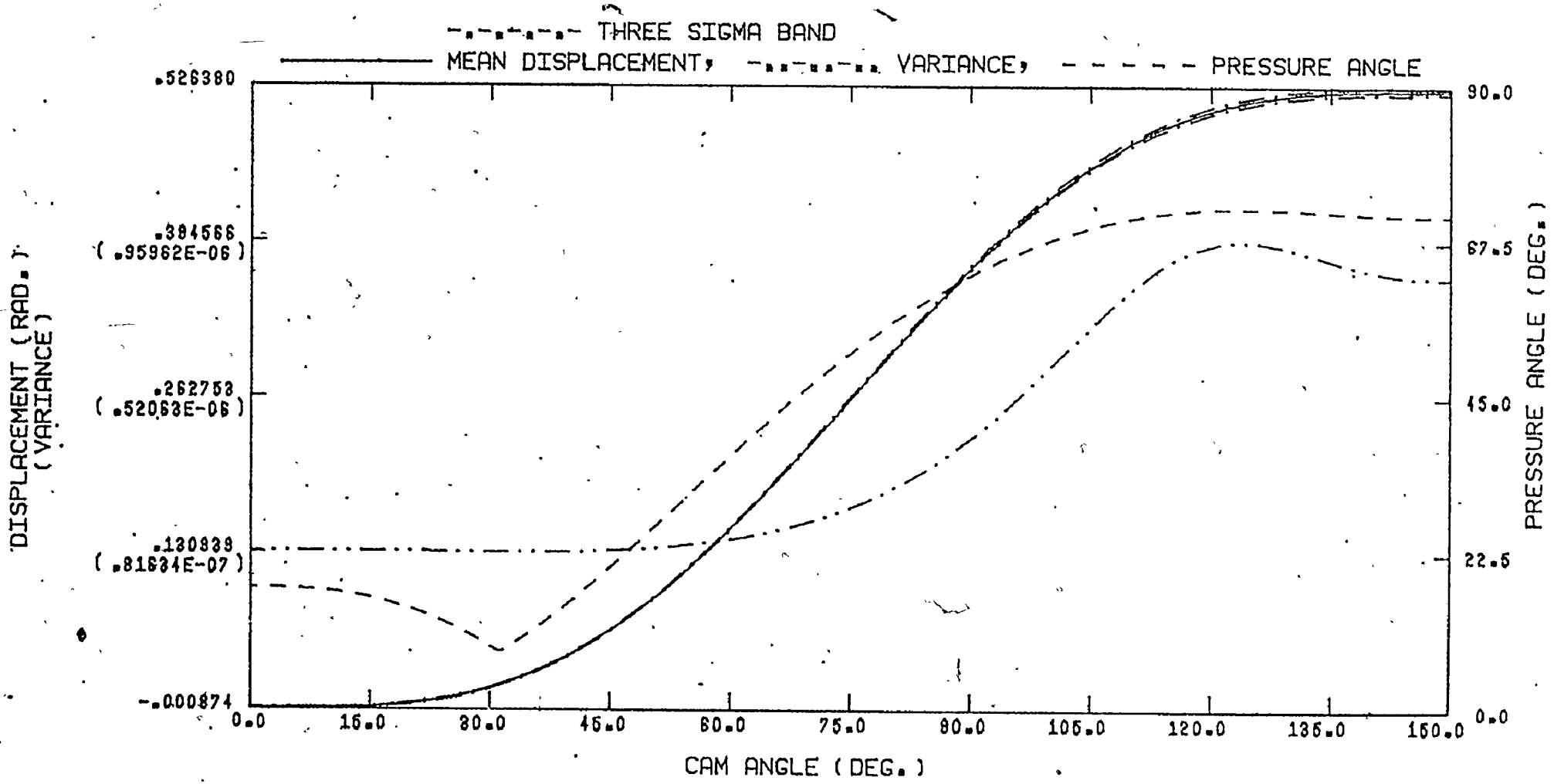

Figure 4.5-1a Displacement Analysis of Oscillating Roller Follower.

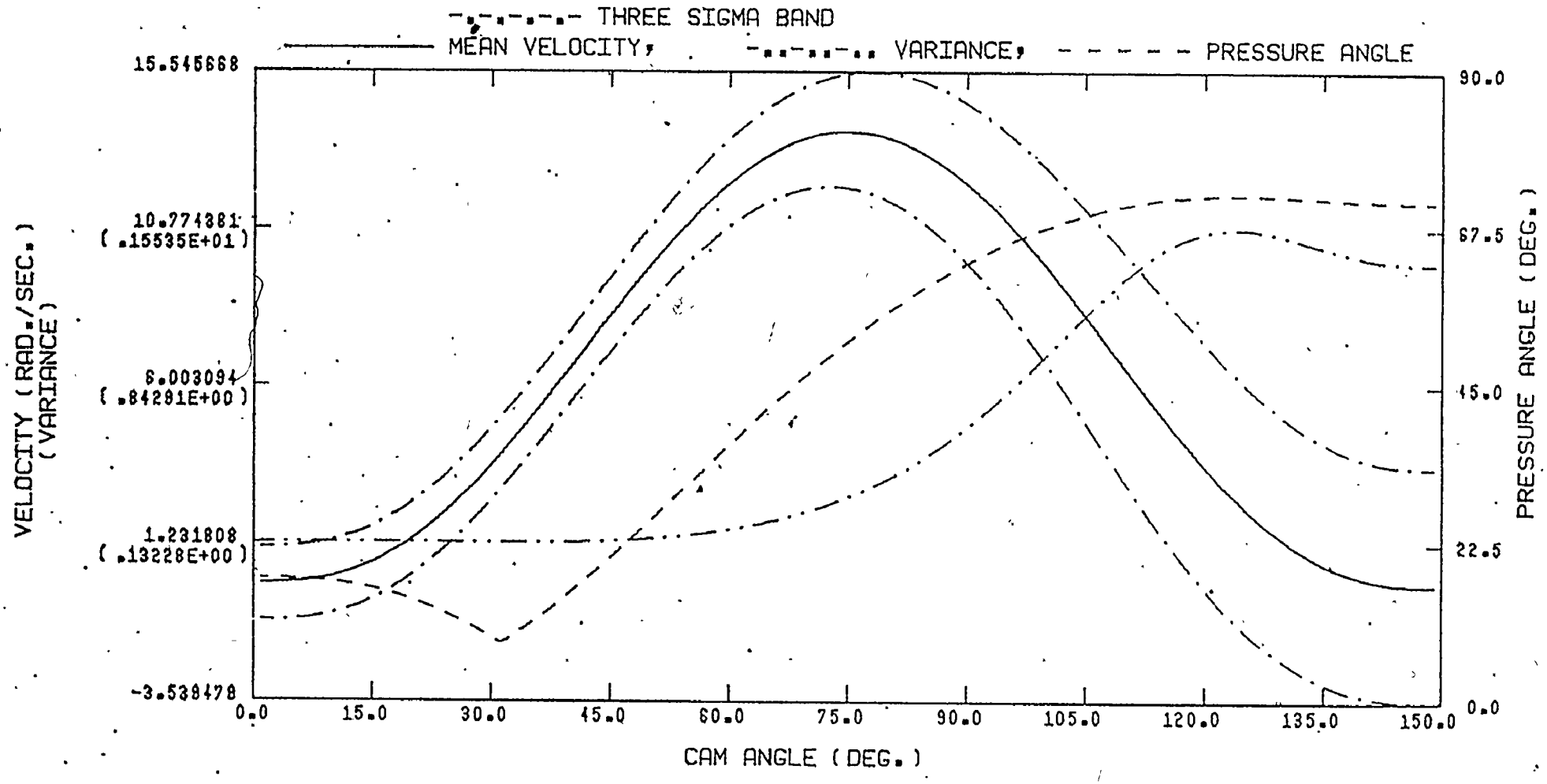

Figure 4.5-1b Velocity Analysis of Oscillating Roller Follower.

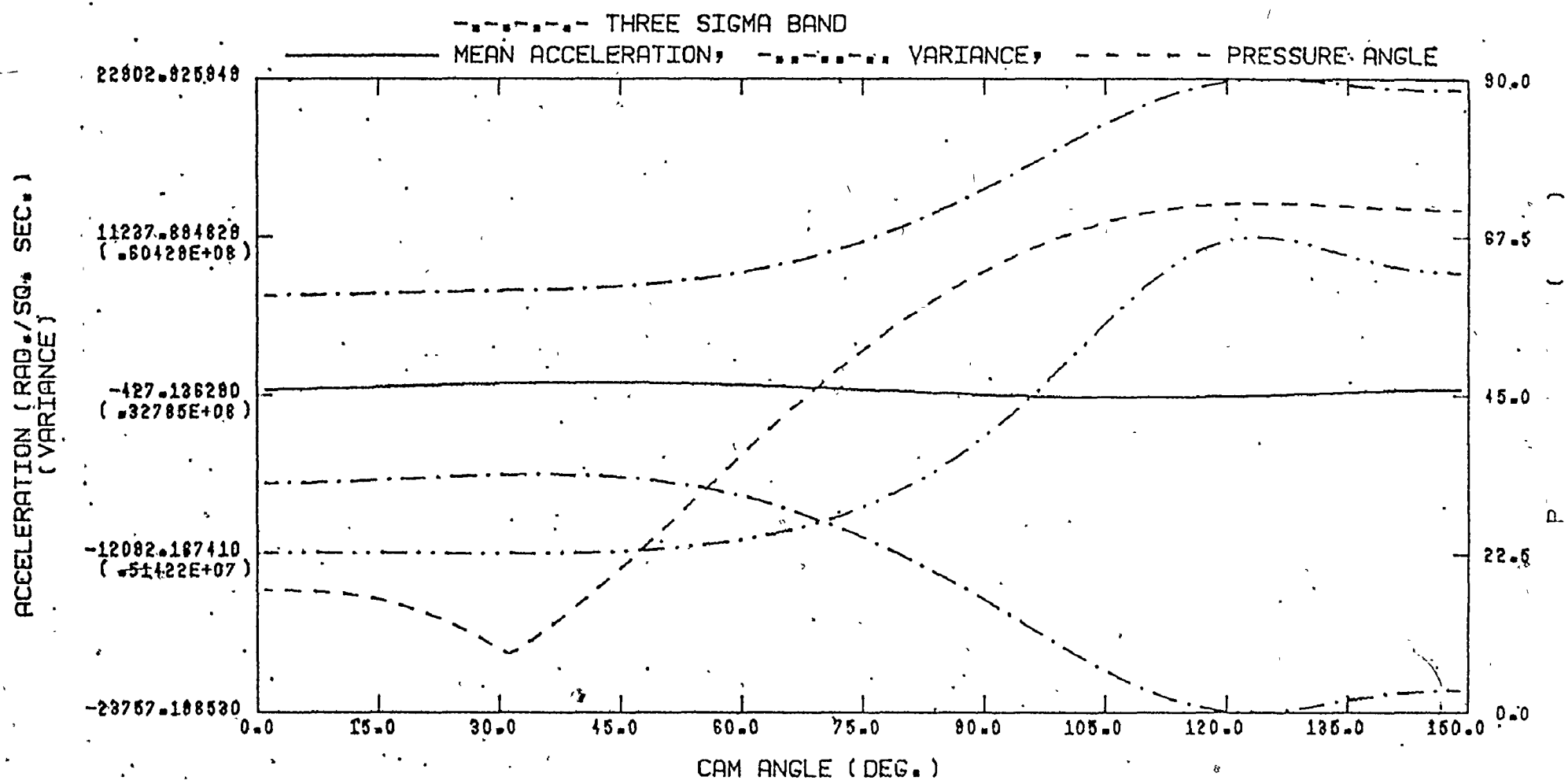

Figure 4.5-1c Acceleration Analysis of Oscillating Roller Follower

TABLE 4.5-1a

ANALYSIS OF OSCILLATING ROLLER FOLLOWER

IN MAXIMUM VALUES

	Lower And Higher Test Dimn.	Radius of		Pressure Angle		Variance of Displacement		Variance of Velocity		Variance of Acceleration	
		Base Circle	Pitch Circle	C.A.	Max.	C.A.	Max. ($\times 10^{-7}$)	C.A.	Max. ($\times 10^{0}$)	C.A.	Max. ($\times 10^{7}$)
Basic Dimn.		2.57352	4.5210	124	72.3554	124	9.5962	124	1.5535	124*	6.04290
T.S.	15	2.57352	3.303	98	27.8132	98	.98211	98	0.15908	98	.61856
(30)	45	2.57352		98	89.2810		Not		Workable		
C.R.	120	2.57352	4.367	96	73.1037	96	10.4570	96	1.69190	96	6.58370
(150)	180	2.57352	4.5278	152	71.9521	152	9.1760	152	1.48590	152	5.77880
RPM	200	2.57352	4.5210	124	72.3554	124	9.5962	124	0.69046	124	1.19370
(300)	400	2.57352	4.5210	124	72.3554	124	9.5962	124	2.76180	124	19.09800
R.R.	0.25	2.80610	4.6624	124	71.1931	124	9.5962	124	1.55350	124	6.04290
(0.5)	0.75	2.34460	4.3893	124	73.3863	124	9.5962	124	1.55350	124	6.04290
H.D.	3.0	2.5414	4.2968	118	69.6919	118	7.2662	118	1.17660	118	4.57600
(4.0)	5.0	3.0802	5.0280	138	82.8056	138	57.6460	138	9.32810	138	36.29500
V.O.	2.0	1.6314		105	89.2046		not		workable		
(3.0)	4.0	3.5486	5.3682	118	60.4253	118	3.4839	118	0.56414	118	2.19400
A.L.	2.5	3.0802	4.2162	118	54.1105	118	4.3289	118	0.70068	118	2.72580
(3.5)	4.5	2.5414	4.9031	126	78.4656	126	14.2960	126	2.31470	126	9.00290

* C.A. : Cam rotation angle where maximum value occurred (deg.).

TABLE 4.5-1b

ANALYSIS OF OSCILLATING ROLLER FOLLOWER

IN MINIMUM VALUES

	Lower and Higher Test Dimn.	Radius of		Pressure Angle		Variance of Displacement		Variance of Velocity		Variance of Acceleration	
		Base Circle	Pitch Circle	C.A.	Min.	C.A.	Min. ($\times 10^{-7}$)	C.A.	Min. ($\times 10^{0}$)	C.A.	Min. ($\times 10^{7}$)
Basic Dimn.		2.57352	4.521	31	8.2975	31	0.81634	31	0.13228	31	0.51422
T.S. (30)	15	2.57352	3.303	43	8.2576	43	0.81633	43	0.13226	43	0.51419
	45	2.57352		26	8.4991		Not		Workable		
C.R. (150)	120	2.57352	4.367	23	8.1537	23	0.81633	23	0.13231	23	0.51425
	180	2.25735	4.5278	40	8.1712	40	0.81633	40	0.13226	40	0.51419
RPM (300)	200	2.57352	4.5210	31	8.2975	31	0.81634	31	0.05879	31	0.10157
	400	2.57352	4.5210	31	8.2975	31	0.81634	31	0.23516	31	1.62520
R.R. (0.5)	0.25	2.80610	4.6624	31	4.2556	31	0.81634	31	0.13228	31	0.51422
	0.75	2.34460	4.3893	31	12.2581	31	0.81634	31	0.13228	31	0.51422
H.O. (4.0)	3.0	2.54140	4.2968	0	17.3015	1	0.84908	1	0.13755	1	0.53480
	5.0	3.08020	5.0280	53	8.5863	53	0.81640	53	0.13234	53	0.51432
V.O. (3.0)	2.0	1.63740		32	8.3557		Not		Workable		
	4.0	3.54860	5.3682	31	8.2851	31	0.81634	31	0.13227	31	0.51420
A.L. (3.5)	2.5	3.08020	4.2162	61	11.4793	61	1.60000	61	0.25931	61	0.32352
	4.5	2.54140	4.9031	0	15.6056	0	0.51364	1	0.08321	1	0.32352

* C.A. : Cam rotation angle where minimum value occurred.

TABLE 4.5-2a

COMPARISON TO BASIC DIMENSION IN MAXIMUM VALUES

(OSCILLATING ROLLER FOLLOWER)

		Radius of Base Circle	Radius of Pitch Circle	Pressure Angle	Variance of Displacement	Variance of Velocity	Variance of Acceleration
Total Sweep	Decreased	Same	Dec.	Dec.	Dec.	Dec.	Dec.
	Increased			Not	Comparable		
Cam Rotation Angle	Decreased	Same	Dec.	Inc.	Inc.	Inc.	Inc.
	Increased	Same	Inc.	Dec.	Dec.	Dec.	Dec.
R.P.M.	Decreased	Same	Same	Same	Same	Dec.	Dec.
	Increased	Same	Same	Same	Same	Inc.	Inc.
Radius of Roller	Decreased	Inc.	Inc.	Dec.	Same	Same	Same
	Increased	Dec.	Dec.	Inc.	Same	Same	Same
Horizontal Offset	Decreased	Dec.	Dec.	Dec.	Dec.	Dec.	Dec.
	Increased	Inc.	Inc.	Inc.	Inc.	Inc.	Inc.
Vertical Offset	Decreased			Not	Comparable		
	Increased	Inc.	Inc.	Dec.	Dec.	Dec.	Dec.
Arm Length	Decreased	Inc.	Dec.	Dec.	Dec.	Dec.	Dec.
	Increased	Dec.	Inc.	Inc.	Inc.	Inc.	Inc.

Inc. = Increase Dec. = Decrease

TABLE 4.5-2b

COMPARISON TO BASIC DIMENSION IN MINIMUM VALUES

(OSCILLATING ROLLER FOLLOWER)

		Radius of Base Circle	Radius of Pitch Circle	Pressure Angle	Variance of Displacement	Variance of Velocity	Variance of Acceleration
Total Sweep	Decreased	Same	Dec.	Dec.	Same	Dec.	Dec.
	Increased			Not	Comparable		
Cam Rotation Angle	Decreased	Same	Dec.	Dec.	Same	Inc.	Inc.
	Increased	Same	Inc.	Dec.	Same	Dec.	Dec.
R.P.M.	Decreased	Same	Same	Same	Same	Dec.	Dec.
	Increased	Same	Same	Same	Same	Inc.	Inc.
Radius of Roller	Decreased	Inc.	Inc.	Dec.	Same	Same	Same
	Increased	Dec.	Dec.	Inc.	Same	Same	Same
Horizontal Offset	Decreased	Dec.	Dec.	Inc.	Inc.	Inc.	Inc.
	Increased	Inc.	Inc.	Inc.	Inc.	Inc.	Inc.
Vertical Offset	Decreased			Not	Comparable		
	Increased	Inc.	Inc.	Dec.	Same	Same	Dec.
Arm Length	Decreased	Inc.	Dec.	Inc.	Inc.	Inc.	Inc.
	Increased	Dec.	Inc.	Inc.	Dec.	Dec.	Dec.

Inc. = Increase Dec. = Decrease

TABLE 4.5-3a

ANALYSIS OF MOTION CURVE EFFECTS FOR OSCILLATING ROLLER FOLLOWER

(BASED ON MAXIMUM VALUES)

Motion Curves	Radius of Pitch Circle (inch)	Pressure Angle C.A.	Pressure Angle (deg.)	Variance of Displcacement C.A.	Variance of Displcacement ($\times 10^{-5}$)	Variance of Velocity C.A.	Variance of Velocity ($\times 10^{1}$)	Variance of Acceleration C.A.	Variance of Acceleration ($\times 10^{8}$)
Straight Line	4.591226	150	16.88257	150	1.7296	149	0.26259	149	1.0188
Parabolic	4.536425	139	72.42305	139	0.96695	139	0.15651	139	0.60886
Cubic No. 1	4.530	128	72.01604	128	0.92407	128	0.14364	128	0.58136
Cubic No. 2	4.53616	140	72.76432	140	1.0053	140	0.16265	140	0.63294
SHM	4.5343	139	72.63045	139	0.98997	139	0.16020	139	0.62331
Double Harmonic	4.52734	140	73.62777	140	1.1132	140	0.17993	140	0.70063
Cycloidal	4.52496	129	72.28883	129	0.95248	129	0.15420	129	0.5998
Trapezoidal	4.526369	130	72.4332	130	0.96806	130	0.15664	130	0.60950
Modified Trapezoidal	4.5287	132	72.44156	132	0.9697	132	0.15682	132	0.61011
2-3 Polynomial	4.53616	140	72.76492	140	1.0053	140	0.16265	140	0.63294
3-4-5 Polynomial	4.5268	131	72.38128	131	0.96241	131	0.15579	131	0.60603
4-5-6-7 Polynomial	4.52099	124	72.35542	124	0.95962	124	0.15535	124	0.60423

* C.A. : Cam rotation angle where maximum value occurred (deg.).

TABLE 4.5-3b

ANALYSIS OF MOTION CURVE EFFECTS FOR OSCILLATING ROLLER FOLLOWER

(BASED ON MINIMUM VALUES)

Motion Curves	Radius of Pitch Circle	Pressure Angle		Variance of Displacement		Variance of Velocity		Variance of Acceleration	
	(inch)	C.A.	(deg.)	C.A.	($x10^{-7}$)	C.A.	($x10^{0}$)	C.A.	($x10^{7}$)
Straight Line	4.591226	0	11.85105	0	0.82157	1	0.13320	1	0.517860
Parabolic	4.536425	23	8.21528	23	0.81633	23	0.13226	23	0.514190
Cubic 1	4.530000	34	8.24479	34	0.81633	34	0.13327	34	0.514200
Cubic 2	4.536160	18	8.26123	18	0.81633	18	0.13226	18	0.514200
SHM	4.534300	19	8.35527	19	0.81635	19	0.13227	19	0.514200
Double Harmonic	4.529340	47	8.34913	47	0.81634	47	0.13227	47	0.514210
Cycloidal	4.524960	28	8.27722	28	0.81633	28	0.13227	28	0.514210
Trapezoidal	4.526969	27	8.18476	27	0.81633	27	0.13227	27	0.514200
Modified Trapezoidal	4.528700	26	8.22453	26	0.81633	26	0.13227	26	0.514200
2 - 3 polynomial	4.536160	18	8.26123	18	0.81633	18	0.13226	18	0.514200
3 - 4 - 5 Polynomial	4.526800	26	8.24513	26	0.81633	26	0.13227	26	0.514200
4-5-6-7 Polynomial	4.520990	31	8.29749	31	0.81634	31	0.13228	31	0.514220

* C.A. : Cam rotation angle where maximum value occurred (deg.).

CHAPTER IV

CONCLUSIONS AND RECOMMENDATIONS

5.1 Conclusions

For the final conclusions the following are given as general results of the analysis based on two dimensional cam mechanisms using the developed method and the related computer program.

1. The translating flat faced follower type cam has a constant variance in the output functions regardless of the changing values of design variables or the standard motions used. Its output errors are mainly affected by the cam profile roughness.
2. A smaller pressure angle produces a more exact performance and the bigger the cam size is, the lesser the error in the output motion.
3. The angular velocity or the rpm of the cam does not effect the radius of the pitch circle, pressure angle and the variance of displacement, but it has a larger effect on the variances of velocity and acceleration.

4. For the translating roller follower type cam the order of the curves producing the largest variance to the smallest is as follows:

Cubic No. 1 > 4-5-6-7 polynomial > cycloidal > Trapezoidal > Modified trapezoidal > 3-4-5 polynomial > Parabolic > Double Harmonic > SHM > Cubic No. 2 (2-3 polynomial) > Straight line

5. The oscillating roller follower, the order of the curves producing the largest variance to the smallest is almost diametrically opposed to that of the translating roller follower i.e.

Straight line > double harmonic > Cubic No. 2 > SHM > Modified trapezoidal > Trapezoidal > Parabolic > 3-4-5 polynomial > 4-5-6-7 polynomial > Cycloidal > Cubic No. 1.

In this work, the importance of keeping the pressure angle to a minimum is reaffirmed because maximum errors in follower output occur at points of maximum pressure angle. This is not a great revealation, but the techniques developed here now allow these errors to be quantified. The effect of the cam angular velocity is also emphasized.

This work should now be extended to include all the possible errors in cam mechanisms, and to introduce optimization techniques for minimizing output errors.

5.2 Recommendation

In general, errors in any machining or assembly process are statistical phenomena, and a probabilistic or statistical approach to the analysis of those is the only technique that can produce meaningful results.

Although the analysis in this work was applied to, and the test examples were selected from two dimensional cam mechanisms, this can be easily expanded to three dimensional cam mechanisms or any type of cam-follower system. This method allows exact contact conditions between any cam and follower to be calculated.

Besides the stochastical analysis of cam mechanisms the method can be useful in the cam design field, and the following shows its main features.

i) From the point of view of fabrication of cams, milling cutter position and grinding wheel position as well as exact numerical data of the cam profile can be generated using the method developed.

ii) Without going through the intermediate step of finding the pitch curve, one can find the cam profile directly through this approach.

iii) This method makes it possible to analyse the contact stress between cam and follower by evaluating the principal curvatures, the principal directions and the reduced curvature at the point of contact.

iv) For the positive displacement followers, this method generates data for the cam surfaces simultaneously and the equation of the cam surface in a closed form.

From the analysis carried out on two dimensional cam mechanisms the following may be recommended:

General recommendations for the design of two dimensional cam mechanisms:

i) Reduce pressure angle, increase cam size

ii) Decrease total rise or sweep

iii) Decrease the RPM of cam to reduce particularly the error of velocity and acceleration.

The main design method for reducing follower motion error is shown to be a reduction of the pressure angle thus making the cam size larger. This is contrary to the need of minimizing cam size in most designs to reduce noise and vibration, and to concur with overall space limitations.

In cam optimization, value should be placed on the size factor as a constraint aimed at reducing the vaiance of the follower motion.

If a very exact motion specification is required at some point in the program it is recommended that the angle of cam rotation which has the minimum variance be chosen.

The flat faced follower cam can be recommended as a type that is easily designed, and one whose output error has a constant variance caused mainly by cam profile error.

On choosing a motion curve for a translating roller follower cam, cubic No. 2, SMH or parabolic curve are recommended as they give lower output error than the cycloidal, trapezoidal, or a high degree polynomial motion curve, and for the oscillating roller follower cam, the cubic No. 1, cycloidal or high degree polynomial are recommended over the SMH or trapezoidal curve.

For the purpose of general use, the parabolic motion curve gives less output error than the trapezoidal motion.

Finally, although the method and analysis handled here is purely theoretical and approximations are introduced, this work is expected to be a stepping stone for further study and research of cam mechanism.

REFERENCES

1. Newcombe, W. R., Lecture Note for Kinematic Synthesis of Linkages.
2. Rothbart, H. A., "Cams- Design, Dynamics and Accuracy", John Wiley, New York, 1965.
3. Tao, D. C., "Fundamentals of Motion-Kinematics", Addison-Wesley Publishing Co., 1967.
4. Harrisberger, L., "Mechanization of Motion-Kinematics, Synthesis and Analysis", John Wiley and Sons, Inc., New York, 1961.
5. Tuttle, S. B., "Error Analysis of Mechanism", Machine Design, June, 1960, p. 152-168.
6. Brittain, J. H. C. and Horsnell, R., "A Prediction of Some causes and Effects of Cam Profile Errors", Proc. Instn. Mech. Engrs., 1967-68, Vol. 182.
7. Mischke, C., "Assessment of Ultimate Fidelity of an Eccentric Circular Disk Cam with Translating Flat Faced Follower as a Function Generator", Proceedings of the Design Automation Conferences, 1973, ASME Paper No. 73-DET-18.
8. Sergeyev, V. I. "The Investigation of the Accuracy of a Non-Automated Friction Devices", Problems of the Design and Accuracy of Complex Continuous-Action Devices and Computer Mechanisms, McMillan, New York, 1964, p. 98-110.

9. Filkin, V. P., "An Investigation into the Accuracy of a Conoid Mechanism", (Ref. 8, p. 137-178).

10. Mikhailov, E. A. "The Accuracy and Adjustment of Mechanisms with a Variable Transfer Ratio", (Ref. 8, p. 191-232).

11. Rumiantsev, A. V. "Some Problems of the Technology of Manufacture of Conoid", Ovorongiz, 1953.

12. Kawasaki, Y. et. al., "Lift Error on Grinding Cam Profile", Ann. CIRP., 1975, p. 253-258.

13. Hahn, G. J. and S. S. Shapiro, "Statistical Models in Engineering", Englewood Cliffs, N. J., 1967.

14. Dhande, S. G. and Chakraborty, J., "Mechanical Error Analysis of Cam-Follower Systems- A Stochastic Approach", I. Mech. E., 1975, p. 957-962.

15. Thrall, Robert M. and Leonard Thornheim, University of Michigan and California Research Corporation, "Vector Spaces and Matrices", John Wiley and Sons, Inc., New York, 1957.

16. Schwartz, Jacob T., New York University, "Introduction to Matrices and Vectors", McGraw-Hill Book Co., Inc., New York, 1961.

17. Siddall, J. N., "Analytical Decision-Making in Engineering Design", Prentice-Hall, 1972.

18. Papoulis, A., "Probability; Random Variables and Stochastic Processes", McGraw-Hill, New York, 1965.

19. Goulden, C. H., "Methods of Statistical Analysis", 2nd ed., Wiley, New York, 1952.

20. Brownlee, K. A., "Statistical Theory and Methodology in Science and Engineering", 2nd ed., Wiley, New York, 1965.

21. Bowker, A. H. and G. L. Lieberman, "Engineering Statistics", Prentice-Hall, Englewood Cliffs, N. J., 1959.

22. Nevile, A. M. and J. B. Kennedy, "Basic Statistical Methods for Engineers and Scientists", International, Scranton, Penn., 1964.

23. Gnedenko, B. V. and A. Yakhinchin, "An Elementary Introduction to Theory of Probability", (Translated from Russian), Freeman, San Francisco, 1961.

24. Wine, R. L., "Statistics for Scientists and Engineers", Prentice-Hall, Englewood Cliffs, N. J., 1964.

25. Howel Newbold Tyson, "Kinematics", John Wiley and Sons, Inc., New York, 1966.

26. Joseph, Edward Shigley, "Kinematic Analysis of Mechanisms", McGraw Hill Book Co., 1959.

27. Johnson, R. C., "Method of Finite Differences for Cam Design", Mech. Des., 27, p. 195, (Nov., 1955).

28. Hamming, R. W., "Numerical Methods for Scientists and Engineers", McGraw-Hill Book Co., New York, 1962.

29. Issacson, E. and H. Keller, "Analysis of Numerical Methods", John Wiley and Sons, Inc., New York, 1966.

30. Kopal, Z., "Numerical Analysis", 2nd ed., 1961, John Wiley and Sons, Inc., New York.

31. Benjamin, J. R. and Cornell, C. A., "Probability, Statistics, and Decision for Civil Engineers", McGrall-Hill, 1970.

32. Fisher, R. A., "Applications of Student's Distribution", Metron, Vol. 5, No. 3, 1925.

33. Haugen, E. B., "Probabilistic Approaches to Design", John Wiley and Sons, 1968.

34. Fenton, R. G., "Determining Minimum Cam Size" Machine Design, January 20, 1966, p. 155-158.

35. Dhande, S. G. and Bhadoria, B. S., "Unified Approach to the Analytical Design of Three Dimensional Cam Mechanism", J. Eng. Ind. Trans. ASME, Vol. 97, Feb. 1975, p. 327-333.

36. Francis H. Raven, "Analytical Design of Disk Cams and Three Dimensional Cams by Independent Position Equations", Journal of Applied Mechanics, March, 1959, p. 18-24.

APPENDIX A

FOLLOWER SURFACES

For mechanisms having higher pair contact, the kinematic characteristics depend not only on the link dimensions, but also on the nature of the surfaces at contact points. For example, in the case of three dimensional cams, the transmission function depends on the length of the follower, the relative position of the follower with respect to the cam, the nature of the follower, and the cam surfaces. [35,36]

In this appendix, equations of some typical follower surfaces are derived. In every case, $\bar{R}^P$ and $\bar{e}^P$, respectively, designate the radius vector of the contact point P and the unit normal vector at P on the follower surface.

A.1 Spherical Follower (Figure A-1)

$$\bar{R}^P = [b + r\cos\delta\cos\theta,\ r\cos\delta\sin\theta,\ r\sin\delta]^T \qquad (A.1\text{-}1)$$

$$\bar{e}^P = [\cos\delta\cos\theta,\ \cos\delta\sin\theta,\ \sin\delta]^T \qquad (A.1\text{-}2)$$

where b is the arm length and r is the radius of the sphere. δ and θ are the parameters of the surface as shown in the Figure A-1.

A.2 Globoidal Follower (Figure A-2)

$$\bar{R}^P = \begin{vmatrix} b + (r\cos\delta + e - b)\cos\theta \\ (r\cos\delta + e - b)\sin\theta \\ r\sin\delta - d \end{vmatrix} \qquad (A.2\text{-}1)$$

$$\bar{e}^P = [\cos\delta\cos\theta,\ \cos\delta\sin\theta,\ \sin\delta]^T \qquad (A.2\text{-}2)$$

where b is the arm length, (e,d) are the coordinates of the center O_r in the XOY plane, r is the radius of the globoidal surface, δ and θ are the parameters of the surface, as shown in Figure A-2.

A.3 Conical Follower (Figure A-3)

$$\bar{R}^P = \begin{vmatrix} b + (r + \phi\tan\alpha)\sin\theta \\ (r + \phi\tan\alpha)\sin\theta \\ -(\mu + \phi) \end{vmatrix} \qquad (A.3\text{-}1)$$

$$\bar{e}^P = [\cos\theta\cos\alpha,\ \sin\theta\cos\alpha,\ \sin\alpha]^T \qquad (A.3\text{-}2)$$

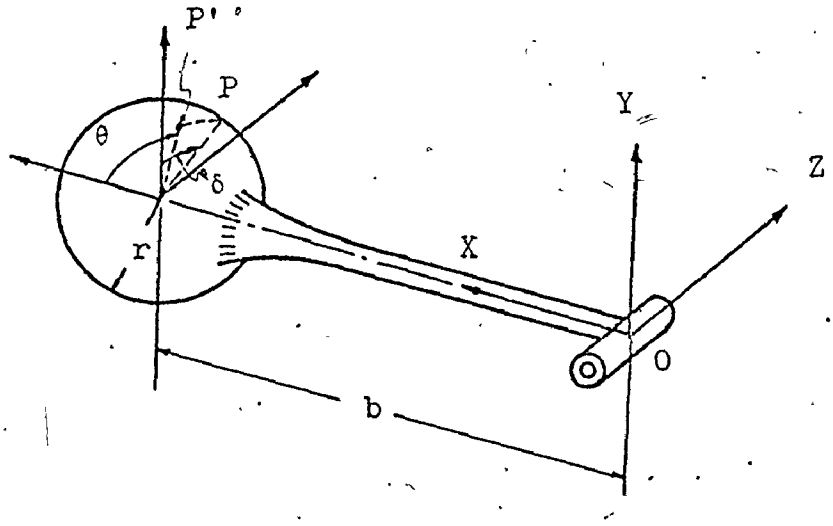

Figure A-1 Spherical Follower.

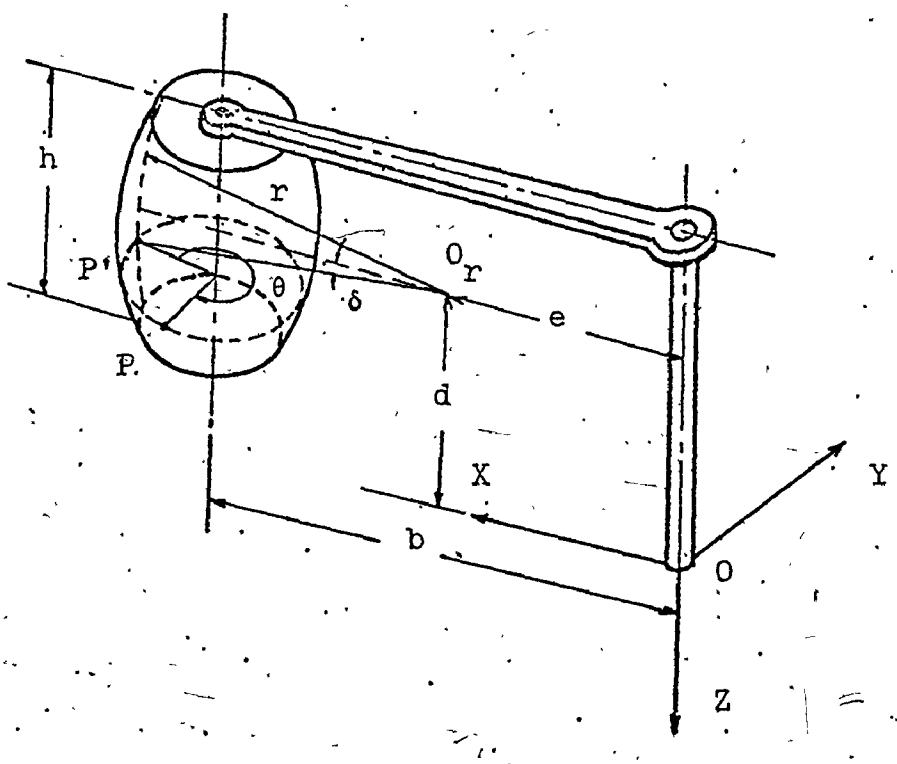

Figure A-2 Globoidal Follower.

where b is the arm length, r is the smallest radius of the cone, α is the semicone angle, μ is the height of the smallest circle plane from the XOY plane, and δ and θ are the parameters of the surface as shown in Figure A-3.

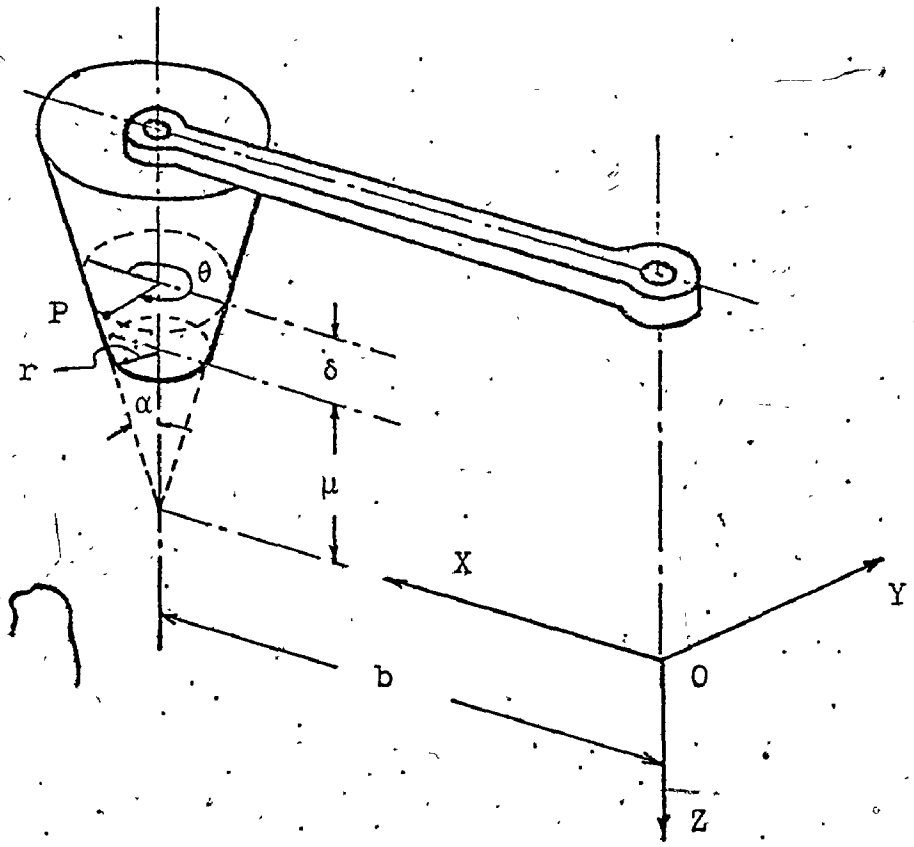

Figure A-3 Conical Follower.

A.4 Cylindrical Follower (Figure A-4)

$$\bar{R}^P = [\delta, \quad r\cos\theta, \quad r\sin\theta]^T \qquad (A.4\text{-}1)$$

$$\bar{e}^P = [0, \quad \cos\theta, \quad \sin\theta]^T \qquad (A.4\text{-}2)$$

where r is the radius of the cylindrical roller, δ and θ are the parameters of the surface as shown in the Figure A-4.

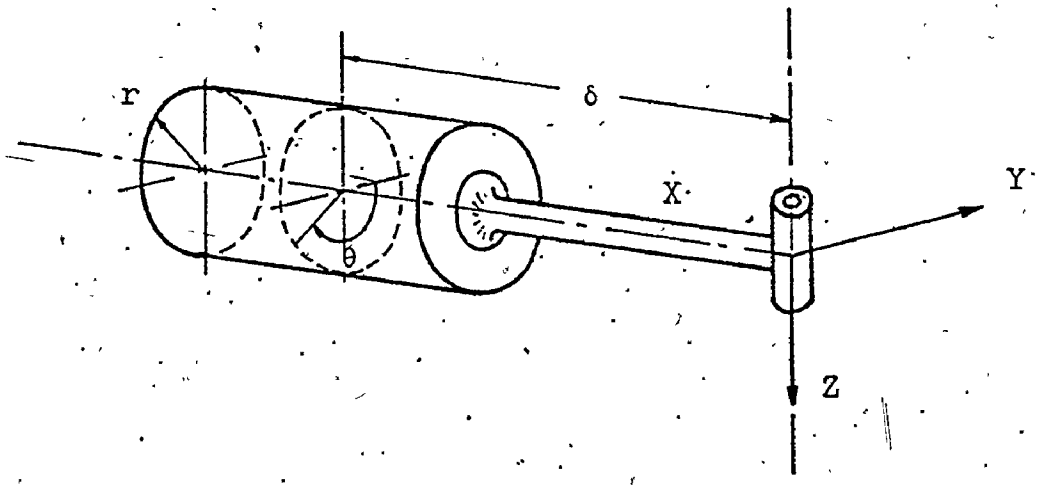

Figure A-4 Cylindrical Follower.

APPENDIX B

ANALYSIS OF CAM MECHANISM (THREE DIMENSION)

In this appendix, the general method described in Chapter II is applied to the following three dimensional cam mechanisms:

a) Cylindrical cams with translating followers,
b) Cylindrical cams with oscillating followers,
c) Globoidal cams with oscillating cylindrical followers,
d) Camoids.

In every case, expressions for the profile of the cam surface and for the pressure angle are derived.[35,36]

B.1 Cylindrical Cam with Translating Offset Follower.

Figure B-1 shows a cylindrical cam with a translating offset follower. The follower is in the form of a frustrum of a cone, the smallest radius being r and the semi-cone angle being α. The fixed coordinate system S_2 is located

in such way that $Z_{\bar{2}}$ axis is along the axis of the rotation of the cam. The axis $Y_{\bar{1}}$ of the coordinate system S_1 lies in the $Z_{\bar{2}}\ O_{\bar{2}}\ X_{\bar{2}}$ plane. The angle of rotation ϕ_2 is the parameter of motion of the cam, and the linear displacement S_1 is the parameter of motion of the follower. ω_2 is the uniform angular velocity of the cam, and $S_1' = S_1(\phi_2)$ is the given displacement relation. The relative velocity vector $\bar{V}_1^{(12)}$ is given as:

$$\bar{V}_1^{(12)} = \omega_2 \cdot \left[-(\mu + \delta),\ \frac{dS_1}{d\phi_2},\ a - (r + \delta\tan\alpha)\cos\theta\right]^T \qquad \text{(B.1-1)}$$

Using Equation (B.1-1) and the expression for the unit normal vector $\bar{e}_1^P$ for the conical follower given in Appendix A, the equation of contact is given as:

$$E\sin\theta \pm F\cos\theta + G = 0 \qquad \text{(B.1-2)}$$

where $E = \frac{dS_1}{d\phi_2}\cos\alpha, \qquad G = a\sin\alpha$

and $F = -(r + \delta\tan\alpha)\sin\alpha - (\mu + \delta)\cos\alpha$

For all single degree freedom cam follower systems, (B.1-2) is the most general form.

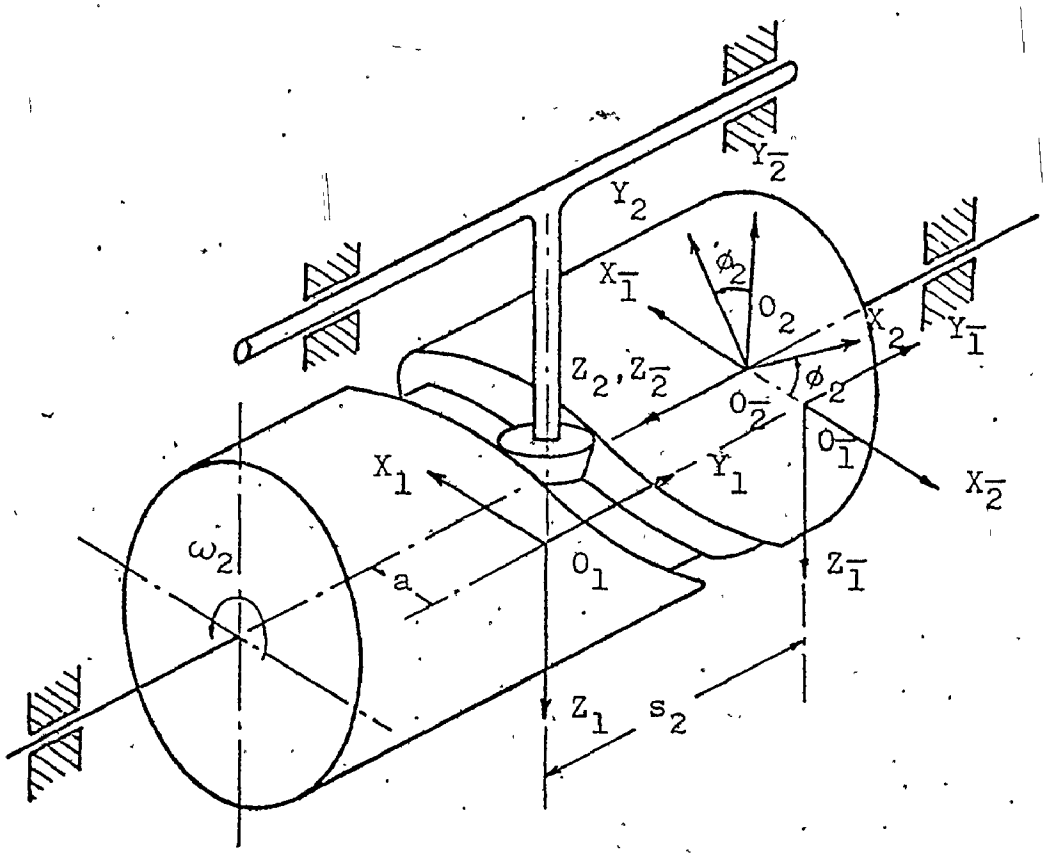

Figure B-1 Cylindrical Cam with a Translating Conical Follower.

Two values of θ corresponding to two sides of the cam groove, in case of positive displacement cams, are given as:

$$\theta = 2\tan^{-1}\left[\frac{-F + (E^2 + F^2 - G^2)^{\frac{1}{2}}}{(G - E)}\right] \qquad (B.1\text{-}3)$$

The cam profile in this case will be

$$\bar{R}_2^P = \begin{bmatrix} X_2 \\ Y_2 \\ Z_2 \end{bmatrix} \qquad \text{(B.1-4)}$$

$$= \begin{bmatrix} -\cos\phi_2\cos\theta(r+\delta\tan\alpha) + \sin\phi_2(\mu+\delta) + a\cos\phi_2 \\ \sin\phi_2\cos\theta(r+\delta\tan\alpha) + \cos\phi_2(\mu+\delta) - a\sin\phi_2 \\ -S_1 - \sin\theta(r + \delta\tan\alpha) \end{bmatrix}$$

The velocity of the point on the follower, coincident with the contact point P, $\bar{V}_{\bar{1}}^{(1)}$, for the translating follower is given as:

$$\bar{V}_{\bar{1}}^{(1)} = [0, \ \omega_2 \frac{dS_1}{d\phi_2}, \ 0]^T \qquad \text{(B.1-5)}$$

The expression for the pressure angle, η, will be obtained using (B.1-5) and (A.3-2) (Appendix A), and is as follows:

$$\cos\eta = \frac{\left|\bar{V}_{\bar{1}}^{(1)} \cdot \bar{e}^P\right|}{\left|\bar{V}_{\bar{1}}^{(1)}\right|}$$

$$= \cos\alpha \sin\theta$$

B.2 Cylindrical Cam with an Oscillating Follower.

A cylindrical cam with an oscillating follower is shown in Figure B-2. The length of the arm is b, and the perpendicular distance between the axis of the arm and the axis of the follower arm is a. The coordinate system $S_{\bar{1}}$ is located such that the axis $Z_{\bar{1}}$ is along the axis of the rotation of the follower arm. The angle of oscillation ϕ_1 is the parameter of the motion of the follower. For the cam, the angle of motion ϕ_2 is the parameter of the motion. The follower is in the form of a globoid (Figure A-2). The angular velocities of the cam and the follower are, respectively, denoted by ω_1 and ω_2.

$\phi_1 = \phi_1(\phi_2)$ is the specified displacement.

The relative velocity $\bar{V}_1^{(12)}$ takes the form:

$$\bar{V}_1^{(12)} = \omega_2 \begin{bmatrix} z_1\cos\phi_1 - y_1\phi_1' \\ x_1\phi_1' - z_1\sin\phi_1 \\ y_1\sin\phi_1 - x_1\cos\phi_1 + a \end{bmatrix} \qquad (B.2\text{-}1)$$

where $x_1 = b + (r\cos\delta + e - b)\cos\theta$

$y_1 = (r\cos\delta + e - b)\sin\theta$

$z_1 = -(d - r\sin\delta)$, and $\phi' = \dfrac{d\phi_1}{d\phi_2}$

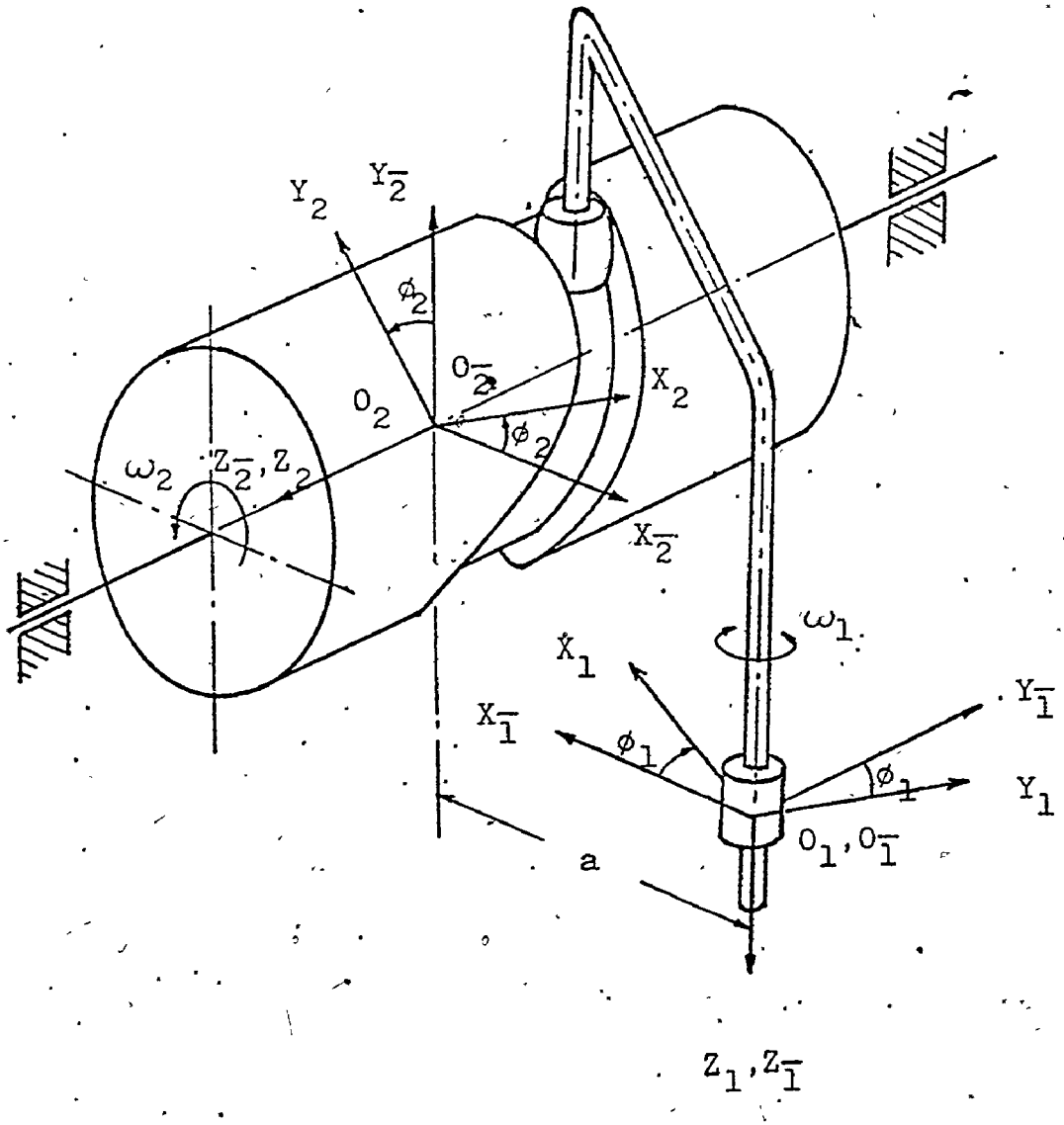

Figure B-2 Cylindrical Cam with an Oscillating Globoidal Follower.

The equation of contact in this case is given as:

$$E\sin\theta + F\cos\theta + G = 0 \qquad \text{(B.2-2)}$$

where

$$E = \phi_1' \cdot b\cos\delta - H\sin\phi_1$$

$$F = H\cos\phi_1$$

$$G = (a + b\cos\phi_1)\sin\delta$$

$$H = (b - e)\sin\delta - d\cos\delta$$

and

$$0 \leq |\delta| \leq \sin^{-1}[h/2r]$$

Using (B.2-2) and transforming (A.2-1), we get the cam profile as:

$$\bar{R}_2^P = \begin{bmatrix} X_2 \\ Y_2 \\ Z_2 \end{bmatrix} \qquad \text{(B.2-3)}$$

$$= \begin{bmatrix} (d - r_1\sin\delta)\sin\phi_2 - (r\cos\delta + e - b)\cos(\theta+\phi_1)\cos\phi_2 \\ \qquad + (a - b\cos\phi_1)\cdot\cos\phi_2 \\ (d - r\sin\delta)\sin\phi_2 + (r\cos\delta + e - b)\cos(\theta+\phi_1)\sin\phi_2 \\ \qquad - (a - b\cos\phi_1)\sin\phi_2 \\ -b\sin\phi_1 - (r\cos\delta + e - b)\sin(\theta+\phi_1) \end{bmatrix}$$

The expression for the pressure angle is as follows:

$$\cos\eta = \frac{b\sin\theta\cos\delta}{[b^2+(r\cos\delta+e-b)^2+2b(r\cos\delta+e-b)\cos\theta]^{\frac{1}{2}}} \qquad (B.2\text{-}4)$$

B.3 Globoidal Cam with an Oscillating Cylindrical Roller

Figure B-3 shows a globoidal cam and an oscillating cylindrical follower. The radius of the roller r and the perpendicular distance between the axis of the rotation of the follower and the axis of rotation of the cam is a. The coordinate system S_1 is so chosen that the axis of the roller cylinder coincides with X_1 axis and the axis of rotation of the follower is Z_1 axis. The parameter of motion for cam and the follower are the angles of rotation ϕ_2 and ϕ_1, respectively.

The relative velocity vector $\bar{V}_1^{(12)}$ is given as:

$$\bar{V}_1^{(12)} = \omega_2 \begin{bmatrix} z_1\cos\phi_1 - y_1\phi_1' \\ x_1\phi_1' - z_1\sin\phi_1 \\ y_1\sin\phi_1 - x_1\cos\phi_1 + a \end{bmatrix} \qquad (B.3\text{-}1)$$

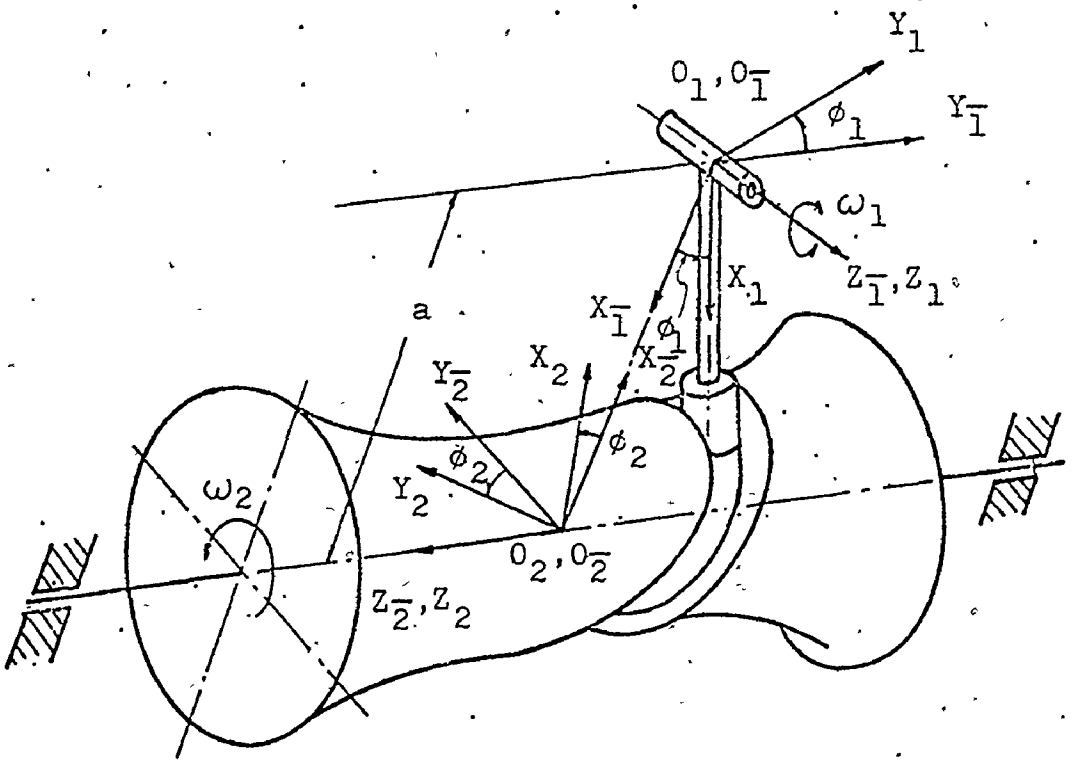

Figure B-3 Globoidal Cam with an Oscillating Cylindrical Follower.

where

$$x_1 = \delta, \qquad y_1 = r\cos\theta, \qquad z_1 = r\sin\theta$$

and

$$\phi_1' = \frac{d\phi_1}{d\phi_2}$$

Using (B.3-1) and (A.4-2) (Appendix A), the equation of contact is given by the expression:

$$E\sin\theta + F\cos\theta + G = 0 \qquad \text{(B.3-2)}$$

where

$$E = a - \delta\cos\phi_1$$

$$F = \delta\cdot\phi_1$$

and

$$G = 0$$

The cam profile in this case is:

$$\bar{R}_2^P = \begin{bmatrix} X_2 \\ Y_2 \\ Z_2 \end{bmatrix} \qquad \text{(B.3-3)}$$

$$= \begin{bmatrix} -\delta\cos\phi_1\cos\phi_2+r\sin\phi_1\cos\phi_2\cos\theta-r\sin\phi_2\sin\theta+a\cos\phi_2 \\ \delta\cos\phi_1\sin\phi_2-r\sin\phi_1\sin\phi_2\cos\theta-r\cos\phi_2\sin\theta-a\sin\phi_2 \\ -\sin\phi_1-r\cos\phi_1\cos\theta \end{bmatrix}$$

The expression for the pressure angle is:

$$\cos\eta = \frac{\delta\cos\theta}{(\delta^2 + r^2\cos^2\theta)^{\frac{1}{2}}} \qquad \text{(B.3-4)}$$

B-4 . Camoids (Figure B-4)

Three dimensional cams or camoids have two degrees of freedom. The follower is often a spherical ball in contact with the cam profile [1]. The cam surface may or may not be a surface of revolution. In case such a mechanism is used to generate an arbitrary function of two parameters and the cam is not a surface of revolution, then extreme care has to be taken to set the initial position of the cam with respect to the follower. Figure B-4 shows a schematic view of the camoid mechanism with an oscillating follower. Coordinate systems S_2 and S_1 are fixed on the axis of the cam and the follower, respectively. These axes are assumed to be parallel to each other. The cam has got two parameters of motion: angle of rotation ϕ_2 about its own axis and translation S_t along the same axis. Rotating coordinate systems S_2 and S_1 are fixed to the cam and the follower, respectively.

The follower has got one parameter of motion: the angle of oscillation ϕ_1. The angular and linear velocity of the cam are denoted by ω_2 and v_2, respectively. ω_1 denotes the angular velocity of oscillation of the follower arm.

The relative velocity vectors $\bar{V}_1^{(12,S_t)}$ and $\bar{V}_1^{(12,\phi_2)}$ in the coordinate system S_1, are given by:

$$\bar{V}_1^{(12,S_t)} = [-\omega_1(r\cos\delta\sin\theta),\ \omega_1(b+r\cos\delta\cos\theta),\ v_2]^T \qquad (B.4\text{-}1)$$

and

$$\bar{V}_1^{(12,\phi_2)} = \begin{bmatrix} -(\omega_1+\omega_2)r\cos\delta\sin\theta + \omega_2 a\sin\phi_1 \\ (\omega_1+\omega_2)(b+r\cos\delta\cos\theta) - a\omega_2\cos\phi_1 \\ 0 \end{bmatrix} \qquad (B.4\text{-}2)$$

Using the Equations (B.4-1), (B.4-2) and $\bar{e}_1^P$ for spherical followers in Appendix A in the conditions of:

$$\bar{e}_1^P \cdot \bar{V}_1^{(12,S_t)} = 0$$

$$\bar{e}_1^P \cdot \bar{V}_1^{(12,\phi_2)} = 0$$

we get the equations of contact as follows:

$$\tan\theta = \frac{\omega_2 a\sin\phi_1}{(\omega_1+\omega_2)b - \omega_2 a\cos\phi_1} \qquad (B.4\text{-}3)$$

$$\tan\delta = \frac{\omega_1 b\sin\theta}{v_2}$$

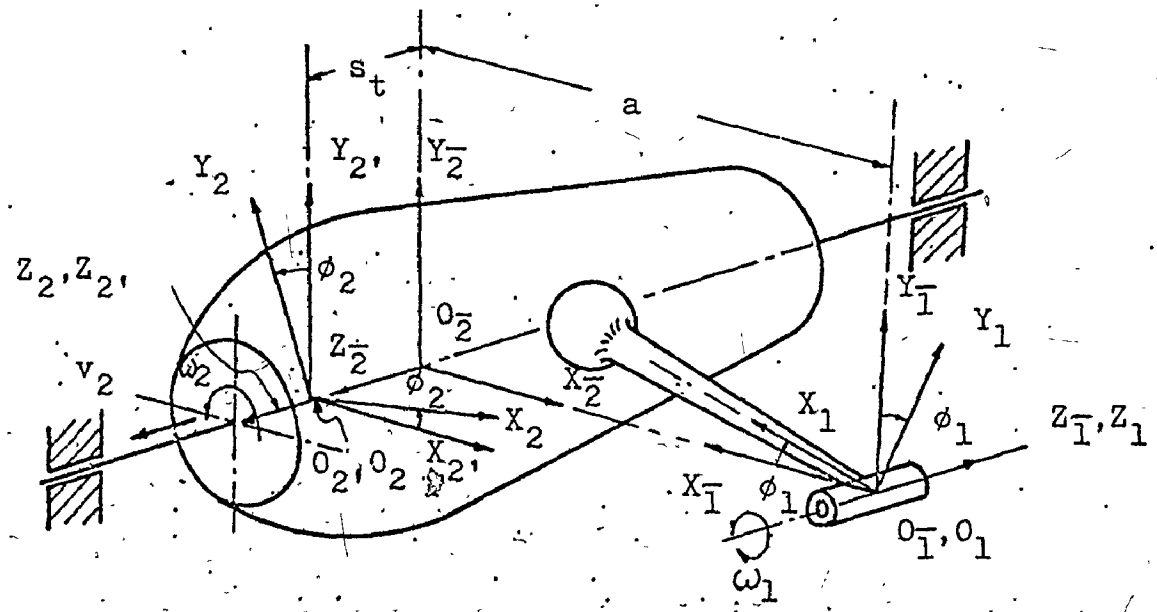

Figure B-4 Camoid with an Oscillating Spherical Follower.

Parameters δ and θ must satisfy the conditions given in (B.4-3) at the point of contact. If M_{21} is the geometrical transformation matrix from the coordinate system S_1 and S_2, then the radius vector $\bar{R}_2^P$ of any point on the cam surface is given as:

$$\bar{R}_2^P = \begin{bmatrix} X_2 \\ Y_2 \\ Z_2 \end{bmatrix} \qquad (B.4\text{-}4)$$

$$= \begin{bmatrix} -b\cos(\phi_1+\phi_2)-r\cos\delta\cos(\phi_1+\phi_2+\theta)+a\cos\phi_2 \\ b\sin(\phi_1+\phi_2)+r\cos\delta\sin(\phi_1+\phi_2+\theta)-a\sin\phi_2 \\ -(S_t+r\sin\delta) \end{bmatrix}$$

The velocity vector of the point on the follower, coincident with the contact point P, $\bar{V}_1^{(1)}$, and unit normal vector, $\bar{e}_1^P$ for the spherical oscillating follower are given as:

$$\bar{V}_1^{(1)} = \begin{bmatrix} -\omega_1(b\sin\phi_1+r\cos\delta\sin(\theta+\phi_1)) \\ \omega_1(b\cos\phi_1+r\cos\delta\cos(\theta+\phi_1)) \\ 0 \end{bmatrix} \qquad (B.4\text{-}5)$$

and

$$\bar{e}_1^P = \begin{bmatrix} \cos(\theta+\phi_1)\cos\delta \\ \sin(\theta+\phi_1)\cos\delta \\ \sin\delta \end{bmatrix} \qquad (B.4\text{-}6)$$

Using the Equations (B.4-5) and (B.4-6), the pressure angle at the contact point is defined as:

$$\cos \eta = \frac{b\cos\delta\sin\theta}{(b^2+r^2\cos^2\delta+2br\cos\delta\cos\theta)^{\frac{1}{2}}} \qquad \text{(B.4-7)}$$

APPENDIX C

PROGRAM USER'S INFORMATION

C.1 How To Use

This computer program is designed to be a one unit program combining the main program and the subprograms, and by filing into computer and changing the input data the user can obtain the desired results for any type of disk cam. Moreover, this program has been programmed for convenient use so that designers who have little knowladge about computers may use this program effectively for disk cam analysis.

The user must provide proper input data which will be explained below;

Input Data

GAMA - Cam angle rotation for the maximum follower displacement H or HA (degrees),

RPM - Cam revolution per minute,

H - Translating follower maximum displacement in inches,

RB - Base circle radius of cam,

A - Offset distance of translating offset follower (inches), set zero for in-line cams,

RR - Roller radius of roller follower (inches) set to zero for in-line cams,

E - Incremental cam angle (degrees),

HA - Oscillating follower maximum displacement or sweep (degrees),

AA - Horizontal offset of oscillating follower (inches),

D - Vertical offset of oscillating cam follower (inches),

B - Arm length of oscillating follower (inches),

TOL1 - Tolerence on the cam components except cam profile (inches),

TOL2 - Tolerence on the cam profile (inches),

I - Integer denoting the first curve number to be considered,

N - Integer denoting the interval of the curves to be considered,

J - Integer denoting the last curve number to be considered,

* The above mentioned curve numbers are as follows;

1- Straightline or constant velocity curve

2- Parabolic or acceleration curve

3- Cubic or constant pulse No.1 curve

4 - Cubic or constant pulse curve

5 - Simple harmonic motion or crank curve

6 - Double harmonic curve

7 - Cycloidal or sine acceleration curve

8 - Trapezoidal or sine acceleration curve

9 - Modified trapezoidal acceleration curve

10 - 2-3 polynomial motion curve

11 - 3-4-5 polynomial motion curve

12 - 4-5-6-7 polynomial motion curve

M - Integer denoting the disk cam follower type

1 - Flat faced follower

2 - Translating offset roller follower

3 - Oscillating roller follower

LI - Integer denoting the interval of output to be printed

IPLOT - Integer controlling the plotting; if plotting wanted, set any integer except zero, if not, set zero.

KSTOP - Integer controlling the stop of program. KSTOP of the final data card must be zero, otherwise, set any positive integer number.

The input data are programmed to be read by FREE FORMAT so that only one data card may be used for each problem. For the examples of the application of this program, the order of the control cards including the input data cards are shown in the Figure C-1. The detailed explanation of Figure C-1 is given below the Table C-1.

Data card 7 is for a disk cam with an offset follower using one motion curve (cycloidal curve) and plotting its kinematic characteristics.

Data card 8 is for a disk cam with an in-line roller follower using two motion curves (simple harmonic motion and trapezoidal acceleration curve) and plotting their kinematic characteristics.

Data card 9 is for a disk cam with an oscillating roller follower using 12 motion curves from straight line to 4-5-6-7 polynomial motion curve mentioned on page 170 without plotting.

Note the value of KSTOP in the final card has been set to zero to stop the program.

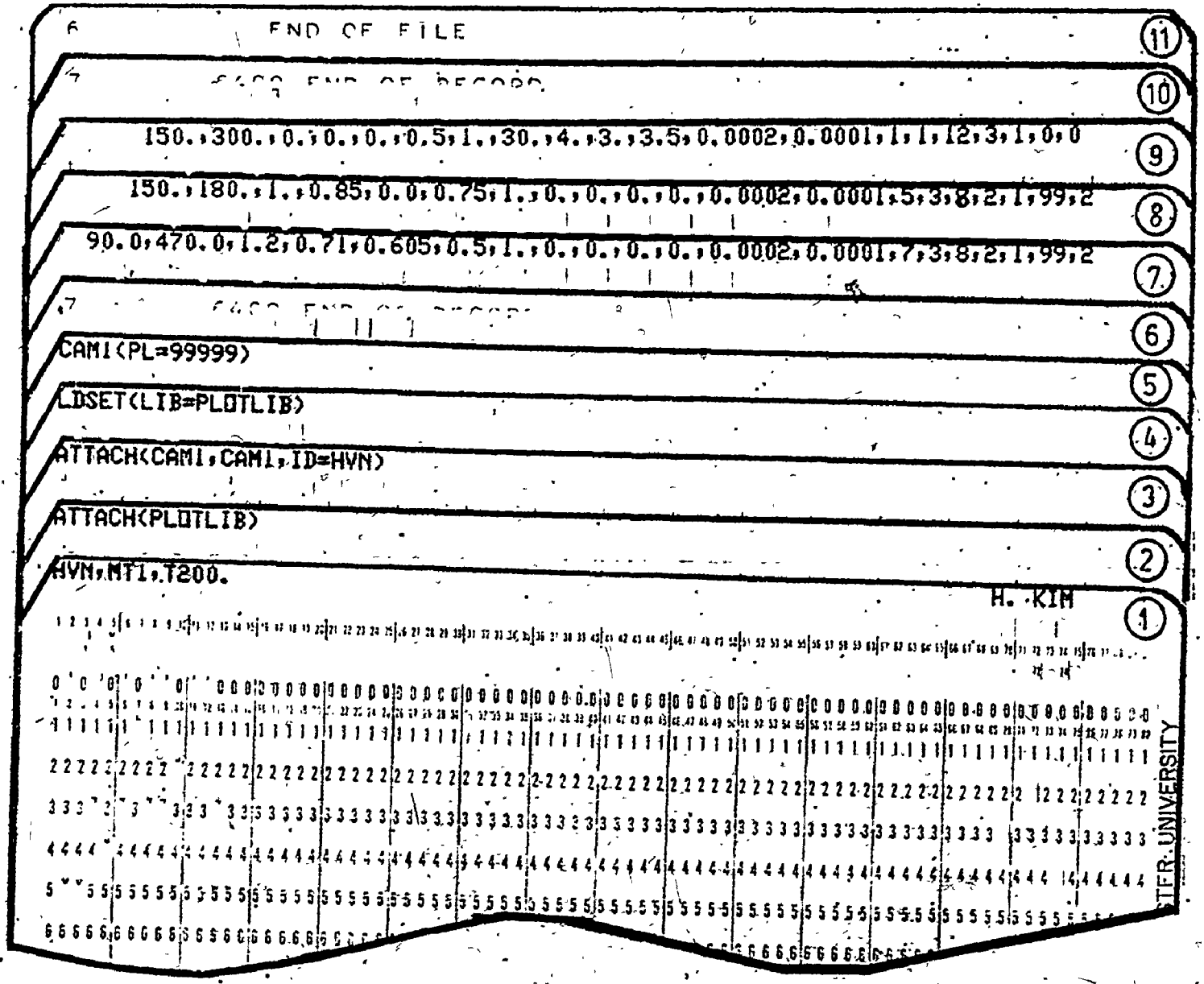

* ①-⑥, ⑩ and ⑪ : Program job control cards

⑦-⑨ : Input data cards

Figure C-1 Example of Program Application

TABLE C-1

	GAMA	RPM	H	RB	A	RR	E	HA	AA	D	B	TOL1	TOL2	I	N	J	M	LI	IPLOT	KSTOP
Unit	deg.		inch	inch	inch	inch	deg.	deg.	inch	inch	inch	inch	inch							
Card 7	90.	470.	1.2	0.71	.605	0.5	1.0	0.0	0.0	0.0	0.0	.0002	.0001	7	3	8	3	1	99	2
Card 8	150.	180.	1.0	0.85	0.0	0.75	1.0	0.0	0.0	0.0	0.0	.0002	.0001	5	3	8	2	1	99	2
Card 9	150.	300.	0.0	0.0	0.0	0.50	1.0	30.	4.0	3.0	3.5	.0002	.0001	1	1	12	3	1	0	0

C.2 Routine Description

1. Main Program

This program consists of the following four main parts:

i) Flat faced follower

ii) Translating roller offset follower

iii) Oscillating roller follower

iv) Plotting (Benson-Lehner Plotter)

2. Subprograms

i) SUBROUTINE PARDER

Provides the partial derivatives which enable the part of the main program concerning the oscillating roller follower to calculate the variances of displacement, velocity and acceleration.

ii) SUBROUTINE TYPE

Provides the letterings for the cam specification according to cam follower types.

iii) SUBROUTINE CURVE

Provides the lettering of the chosen curve.

iv) SUBROUTINE FRAME

Draws the frame of each graph at every plotting and inserts proper numbers in accordance with the chosen follower type and motion curve.

v) SUBROUTINE NUMBER

writes the necessary numbers with ENCODE statement which are used to reformat data in memory; information is transferred under FORMAT specifications from one area of memory to another.

The following subroutines are for the cam follower motion curves which define or limit the follower movement i.e. displacement, velocity and acceleration and include basic curves, trigonometric curves, combination portions of basic curves and polynomial curves. They also provide the expression of jerk, the third derivatives of displacement. Those are as follows;

a) SUBROUTINE STRAIT

gives the function of the straight line or constant velocity curve as a follower motion.

b) SUBROUTINE PARABOL

gives the functions of the parabolic or constant acceleration curve as a follower motion.

c) SUBROUTINE SHM

gives the functions of the simple harmonic motion or crank curve as a follower motion.

d) SUBROUTINE CUBIC 1

gives the functions of the cubic or constant pulse No. 1 curve as a follower motion.

e) SUBROUTINE CUBIC 2

gives the functions of the cubic or constant pulse No. 2 curve as a follower motion.

f) SUBROUTINE DHC

gives the functions of the double harmonic curve as a follower motion.

g) SUBROUTINE CYCLOID

gives the functions of the cycloidal or sine acceleration curve as a follower motion.

h) SUBROUTINE TRAPEZO

gives the functions of the trapezoidal acceleration curve as a follower motion.

i) SUBROUTINE MODITRA

gives the functions of the modified trapezoidal acceleration as a follower motion.

j) SUBROUTINE POLY 23

gives the functions of the 2-3 polynomial curve as a follower motion.

k) SUBROUTINE POLY 345

gives the functions of the 3-4-5 polynomial curve as a follower motion.

l) SUBROUTINE POLY 4567

gives the functions of the 4-5-6-7 polynomial curve as a follower motion.

APPENDIX D

PROGRAM LISTING

```
      PROGRAM TST (INPUT,OUTPUT,TAPE5=INPUT,TAPE6=OUTPUT)
      DIMENSION PA1(200),PA2(200),VAR1(200),VAR2(200),VAR3(200),OC(200),
     $AS11(200),OH(6),AS3(200),U1(200),AX(200),AY(200),
     $AS(200),AS1(200),BA(7),BB(6),AC(2),DISMAX(200),DISMIN(200),
     $VELMAX(200),VELMIN(200),ACELMAX(200),ACELMIN(200)
      COMMON/ABC/O,U,G
      COMMON/DEF/AE,AC,C1,C2,C3
      EQUIVALENCE (H,BA(1)),(FB,BA(2)),(GA,BA(3)),BB(5)),
     $(RPM,BA(4)),(E,BA(5)),(FF,BA(6)),(A,BA(7)),(HA,BB(1)),(AA,BB(2))
   71 FORMAT(/,25X,*(TRANSLATING FLAT FACED FOLLOWER)*,/,25X,31(*-*))
   72 FORMAT (///,25X,*TOTAL RISE*,12X,*=*,F9.5,*(INCH)*,/,25X,*RADIUS C
     $F BASE CIRCLE*,1X,*=*,F9.5,*(INCH)*,/,25X,*CAM ANGLE FOR RISE*,7X,
     $*=*,F9.5,*(DEG.)*,/,25X,*RPM*,19X,*=*,F9.5,/,25X,*INCREMENTAL CAM
     $ ANGLE*,1X,*=*,F9.5,*(DEG.)*)
   81 FORMAT (/,25X,*(TRANSLATING ROLLER FOLLOWER)*,/,25X,28(*-*))
   82 FORMAT (///,25X,*TOTAL RISE*,12X,*=*,F9.5,*(INCH)*,/,25X,*RADIUS C
     $F BASE CIRCLE*,1X,*=*,F9.5,*(INCH)*,/,25X,*CAM ANGLE FOR RISE*,7X,
     $*=*,F9.5,*(DEG.)*,/,25X,*RPM*,19X,*=*,F9.5,/,25X,*INCREMENTAL CAM
     $ ANGLE*,1X,*=*,F9.5,*(DEG.)*,/,25X,*ROLLER RADIUS*,9X,*=*,F9.5,*(I
     $NCH)*,/,25X,*OFFSET DISTANCE*,7X,*=*,F9.5,*(INCH)*)
   91 FORMAT (/,25X,*(OSCILLATING ROLLER FOLLOWER)*,/,25X,28(*-*))
   92 FORMAT(///,25X,*TOTAL SWEEP*,11X,*=*,F9.5,*(DEG.)*,/,25X,*HORIZONT
     $AL OFFSET*,5X,*=*,F9.5,*(INCH)*,/,25X,*VERTICAL OFFSET*,7X,*=*,F9.
     $5,*(INCH)*,/,25X,*FOLLOWER ARM LENGTH*,3X,*=*,F9.5,*(INCH)*,/,25X,
     $*CAM ANGLE FOR SWEEP*,3X,*=*,F9.2,*(DEG.)*,/,25X,*RPM*,19X,*=*,
     $F9.5,/,25X,*INCREMENTAL CAM ANGLE*,1X,*=*,F9.5,*(DEG.)*,/,25X,*ROL
     $LER RADIUS*,9X,*=*,F9.5,*(INCH)*)
  100 FORMAT (/,25X,*TOLERANCE ON LINK*,21X,*=*,F9.5,*(INCH)*,/,25X,*TOL
     $ERANCE ON COMPONENT CE.CAM PROFILE*,1X,*=*,F9.5,*(INCH)*)
  301 FORMAT (///,25X,*STRAIGHT LINE OR CONSTANT VELOCITY CURVE*,/,25X,
     $40(*=*))
  302 FORMAT (///,25X,*PARABOLIC OR CONSTANT ACCELERATIO.. CURVE*,/,25X,
     $40(*=*))
  303 FORMAT(///,25X,*CUBIC OR CONSTANT PULSE NO.1 CURVE*,/,25X,34(*=*))
  304 FORMAT(///,25X,*CUBIC OR CONSTANT PULSE NO.2 CURVE*,/,25X,34(*=*))
  305 FORMAT (///,25X,*SIMPLE HARMONIC MOTION OR CRANK CURVE*,/,25X,
     $37(*=*))
  306 FORMAT (///,25X,*DOUBLE HARMONIC CURVE*,/,25X,21(*=*))
  307 FORMAT (///,25X,*CYCLOICAL OR SINE ACCELERATION CURVE*,/,25X,
     $36(*=*))
```

```
  306 FORMAT (///,25X,'TRAPEZOIDAL ACCELERATION CURVE',/,25X,21('='))
  309 FORMAT (///,25X,'MODIFIED TRAPEZOIDAL ACCELERATION CURVE',/,25X,
     $39('='))
  310 FORMAT (///,25X,'2-3 POLYNOMIAL',/,25X,14('='))
  311 FORMAT (///,25X,'3-5-6-7 POLYNOMIAL',/,25X,16('='))
  312 FORMAT (///,25X,'4-5-6-7 POLYNOMIAL',/,25X,18('='))
  313 FORMAT (////////,51X,'PROGRAMMING CONTROL DATA',/,51X,24('-'),//,
     $32X,317,2X,317)
 1002 FORMAT (1H1,////////////////,25X,'CISK CAM',/,25X,8('='))
 1003 FORMAT (1H1,2X,'CAM ANGLE',13X,'X',13X,'Y',13X,'(CAM PROFILE)',4X,'Y',14X,
     $'PRESSURE ANG.(RAD.)',9X,'PRESSURE ANG.(DEG.)',//)
 1004 FORMAT (2X,F8.1,2F20.6,F25.6,F29.6)
 1005 FORMAT (1H1,2X,'CAM ANGLE',9X,'DISPL.',6X,'VAR. OF DISPL.',12X,
     $'VEL.',6X,'VAR. OF VEL.',13X,'ACCEL.',6X,'VAR. OF ACCEL.',//)
 1006 FORMAT (2X,F8.1,F17.5,E17.5,F20.5,E15.5,F22.5,E15.5)
 1010 FORMAT (2X,F8.1,F12.5,2(',F6.2,'),3E14.5,F20.5,E15.5,F22.5,E15.5)
 1110 FORMAT (///,3X,'THIS OSCILLATING CAM CAN NOT WORK BECAUSE PRESSURE
     $ ANGLE EXCEED 85 DEGREE',/,3X,72('='))
 1111 FORMAT (///,3X,'THIS CAM CAN NOT WORK BECAUSE PRESSURE ANGLE EXCEE
     $D 45 DEGREE',/,3X,61('='))

      IJ=1
 3000 READ (5,*) GAMA,RPM,H,RE,A,RR,E,HA,AA,D,B,TCL1,TOL2,I,N,J,M,LI,
     $IPLOT,KSTOR

      PI=4.0*ATAN(1.0)
      BETA=GAMA*PI/180.0
      OMEGA=RPM*PI/30.0
      L1=GAMA/E
      L=L1+1
      V=OMEGA/BETA
      V1=V*PI
      EE=E*PI/180
      CV=V*V
      EV=V*CV
      Z=V1*V1
      AE=EE*EE
      BE =OMEGA*OMEGA
      Q=1./(2.*PI)
      U=PI*PI
      G=2.*PI
      Q1=(TOL1/3.0)*(TOL1/3.0)
      Q2=(TOL2/3.0)*(TOL2/3.0)
      Q3=OMEGA/(2.*EE)
      Q4=BE/AE
      CA=HA*PI/180.0
      VAR2(L)=XINCEF
      VAR3(L)=XINDEF

 1001 C=J.0
      K1=1
      J1=J+1
```

```
      DO 1000 K=1,L
      T=C*PI/180.0
      CC(K)=C
      P=T/BETA
      P1=P+PI

C     CHOOSE THE CURVE WANTED

      IF (P.EQ.3) H=QA
      IF (I.EQ.8.AND.T.GT.BETA/2.0) GO TO 19
      IF (I.EQ.9.AND.T.GT.BETA/2.0) GO TO 19
      GO TO (1,2,3,4,5,6,7,8,9,10,11,12) I

    1 CALL STRAIT (H,P,V,S,S1,S11,S3)
      GO TO 21
    2 CALL PARABOL (H,T,BETA,P,V,S,S1,S11,S3,CV)
      GO TO 21
    3 CALL CUBIC1 (H,T,BETA,P,V,S,S1,S11,S3,CV,EV)
      GO TO 21
    4 CALL CUBIC2 (H,P,V,S,S1,S11,S3,CV,EV)
      GO TO 21
    5 CALL SHM    (H,P1,V1,S,S1,S11,S3,Z)
      GO TO 21
    6 CALL DHC    (H,P1,V1,S,S1,S11,S3,Z)
      GO TO 21
    7 CALL CYCLOID (H,P1,V,V1,S,S1,S11,PI,S3,CV)
      GO TO 21
    8 CALL IAREZO (H,T,BETA,P,V,S,S1,S11,S3,EV)
      GO TO 21
    9 CALL MOLITRA (H,T,BETA,P,P1,V,S,S1,S11,PI,S3,CV,EV)
      GO TO 21
   10 CALL POLY23 (H,P,V,S,S1,S11,S3,CV,EV)
      GO TO 21
   11 CALL POLY345(H,P,V,S,S1,S11,S3,CV,EV)
      GO TO 21
   12 CALL POL4567(H,P,V,S,S1,S11,S3,CV,EV)
      GO TO 21

   19 S=H-AS(K-K1+2)
      S1=AS1(K-K1+2)
      S11=-AS11(K-K1+2)
      K1=K1+1

   21 AS   (K)=S
      U1(K)=180.*S/PI
      AS1 (K)=S1
      AS11(K)=S11
      AS3 (K)=S3

      IF (M-2) 101,201,301
```

```
C     FLAT FACE FOLLOWER
C     ==================
  101 S0=RB
C     CAM PROFILE
      X=(S+S0)*SIN(T)+S1/OMEGA*COS(T)
      Y=(S+S0)*COS(T)-S1/OMEGA*SIN(T)
C     MEAN DISPLACEMENT
      DISPL=X*SIN(T)+Y*COS(T)-S0
C     PRESSURE ANGLE
      PA1(K)=0.0
      PA2(K)=0.0
C     PARTIAL DERIVATIVES OF DISPLACEMENT
      SSS0=-1.0
      SSX=SIN(T)
      SSY=COS(T)
C     FIND VARIANCE OF DISPLACEMENT
      VAR1(K)=(SSS0*SSS0)*C1+(SSX*SSX+SSY*SSY)*C2
      GO TO 401
C     OFFSET TRANSLATING ROLLER FOLLOWER
C     ==================================
  201 S0=SQRT((RB+RR)*(RB+RR)-A*A)
C     ROTATION ANGLE OF ROLLER
      SETA1=ATAN(-OMEGA*(S+S0)/(S1-OMEGA*A))
      IF (SETA1.LT.0.0) SETA1=-SETA1
C     PRESSURE ANGLE
      PA1(K)=ACOS(SIN(SETA1))
      PA2(K)=180.*PA1(K)/PI
      IF (PA2(K).GT.45..OR. PA2(K).LT.0.0) GO TO 29
C     CAM PROFILE
      SETA=PI+SETA1
```

```
      X=A*COS(T)+(S+SL)*SIN(T)+RR*COS(SETA-T)
      Y=-A*SIN(T)+(S+SO)*COS(T)+RR*SIN(SETA-T)

      SETA2=ACOS((X*COS(T)+Y*SIN(T)-A)/RF)

C     MEAN DISPLACEMENT

      DISPL=X*SIN(T)+Y*COS(T)-RR*SIN(SETA2)-SO

C     PARTIAL DERIVATIVES

      CK1=(Y*SIN(T)-X*COS(T)+A)/RR
      CK2=SQRT(1.0-CK1*CK1)
      CK3=RR*CK2
      SA=-1.0/CK3
      SRR=CK1/CK2
      SX=COS(T)/CK3
      SY=SIN(T)/CK3
      SOA=-A/SO
      SORR=(RB+RF)/SO
      CK4=RR*COS(T)
      SSA=-CK4*SA-SOA
      SSX=SIN(T)-CK4*SX
      SSY=COS(T)-CK4*SY
      SSRR=-SIN(T)-CK4*SRR-SORR

C     FILL VARIANCE OF DISPLACEMENT

      VAR1(K)=(SSA*SSA+SSRR*SSRR)*C1+(SSX*SSX+SSY*SSY)*D2

      GO TO 401

C     ==========================================
C     OFFSET OSCILLATING ROLLER FOLLOWER
C     ==========================================

C     ROTATION ANGLE OF ROLLER

  300 SETA1=ATAN((OMEGA*(D*COS(S)-AA*SIN(S)))/((S1+OMEGA)*B+OMEGA*
     $(D*SIN(S)+AA*COS(S))))
      IF (SETA1.LT.0.0) SETA1=-SETA1

C     PRESSURE ANGLE

      PA1(K)=ACOS(2*SIN(SETA1)/SQRT(B*B+RR*RR+2.*B*RR*COS(SETA1)))
      PA2(K)=180.*PA1(K)/PI
      IF (PA2(K).GE.89.0) GO TO 29

C     CAM PROFILE

      SETA=SETA1+PI
      X=AA*COS(T)+D*SIN(T)-B*COS(S+T)-RR*COS(SETA+S+T)
      Y=-AA*SIN(T)+D*COS(T)+B*SIN(S+T)+RR*SIN(SETA+S+T)
```

```
      C1=X-AA*COS(T)-C*SIN(T)
      C2=Y+AA*SIN(T)-C*COS(T)
      SETA2=ACOS((C1*C1+C2*C2-B*B+RR*RR)/(2.*B*RR))
      C3=-B*SIN(T)-RR*SIN(SETA2+T)
C     MEAN DISPLACEMENT
      AB=C3-C2
      AC=-SQRT(C1*C1+C2*C2-C3*C3)
      DISPL=2.*ABS(ATAN((-C1-AC)/AB))
C     PARTIAL DERIVATIVES
      CALL PARCEP (T,SETA2,B,RR,DX,DY,SETA,DH)
C     FIND VARIANCE OF DISPLACEMENT
      VAR1(K)=(DH(1)*DH(1)+DH(2)*DH(2))*D2+(DH(3)*DH(3)+DH(4)*DH(4)+
     $DH(5)*DH(5)+DH(6)*DH(6))*D1
C     CALCULATE VELOCITY & ACCELERATION VARIANCES BY FINITE DIFFERENCE
  401 AX(K)=X
      AY(K)=Y
      STDEV1=3.*SQRT(VAR1(K))
      DISPMAX(K)=AS(K)+STDEV1
      DISPMIN(K)=AS(K)-STDEV1
      IF(K.LT.3) GO TO 900
      VAR2(K-1)=D3*D3*(VAR1(K)+VAR1(K-2))
      STDEV2=3.*SQRT(VAR2(K-1))
      VELMAX(K-1)=AS1(K-1)+STDEV2
      VELMIN(K-1)=AS1(K-1)-STDEV2
      VAR3(K-1)=D4*D4*(VAR1(K-2)+VAR1(K)+4.*VAR1(K-1))
      STDEV3=3.*SQRT(VAR3(K-1))
      ACELMAX(K-1)=AS11(K-1)+STDEV3
      ACELMIN(K-1)=AS11(K-1)-STDEV3
  900 C=C+E
 1000 CONTINUE
      GO TO 30
C     PRINT ALL OUTPUT
   29 KC=K
   30 WRITE (6,1002)
      GO TO (31,32,33),K
   31 WRITE (6,71)
      WRITE (6,72) H,RB,GAMA,SA,E
      WRITE (6,100) TOL1,TOL2
      GO TO 40
```

```
   32 WRITE (6,81)
      WRITE (6,82) H,FB,GAMA,RPM,E,RR,A
      WRITE (6,100) TCL1,TCL2
      GO TO 40
   33 WRITE (6,91)
      WRITE (6,92) HA,AA,D,B,GAMA,RPM,E,R
      WRITE (6,100) TCL1,TCL2
   40 GO TO (41,42,43,44,45,46,47,48,49,50,51,52) I
   41 WRITE (6,301)
      GO TO 1100
   42 WRITE (6,302)
      GO TO 1100
   43 WRITE (6,303)
      GO TO 1100
   44 WRITE (6,304)
      GO TO 1100
   45 WRITE (6,305)
      GO TO 1100
   46 WRITE (6,306)
      GO TO 1100
   47 WRITE (6,307)
      GO TO 1100
   48 WRITE (6,308)
      GO TO 1100
   49 WRITE (6,309)
      GO TO 1100
   50 WRITE (6,310)
      GO TO 1100
   51 WRITE (6,311)
      GO TO 1100
   52 WRITE (6,312)
 1100 WRITE (6,313) I,N,J,M,L,IPLOT,KSTOP
      WRITE (6,1003)
      IF(M.EQ.2.AND.PA2(K).GT.90..OR.J.EQ.2.AND.PA2(K).LT.0.) GO TO 1200
      IF (M.EQ.3.AND.PA2(K).GE.89.0) GO TO 1200
      GO TO 1201
 1200 WRITE (6,1004)(CC(K),AX(K),AY(K),PA1(K),PA2(K),K=1,KD,LI)
      IF (M.EQ.3) WRITE (6,1110)
      IF (M.EQ.2) WRITE (6,1111)
      GO TO 1500
 1201 WRITE (6,1004)(CC(K),AX(K),AY(K),PA1(K),PA2(K),K=1,L,LI)
      WRITE (6,1005)
      IF (M.EQ.3) GO TO 53
      WRITE(6,1006)(CC(K),AS(K),VAR1(K),AS1(K),VAR2(K),
     $AS11(K),VAR3(K),K=1,L,LI)
      GO TO 54
   53 WRITE (6,1010)(CC(K),AS(K),U1(K),VAR1(K),AS1(K),VAR2(K),
     $AS11(K),VAR3(K),K=1,L,LI)

C     BEGIN PLOTTING OF DISP., VEL., & ACCEL.

   54 IF (IPLOT.EQ.0) GO TO 1501
```

```
      M1=L-1
      VMAX=VELMAX(2)
      VMIN=VELMIN(2)
      ACMAX=ACELMAX(2)
      ACMIN=ACELMIN(2)
      V1X=VAR1(1)
      V1N=VAR1(1)
      V2X=VAR2(2)
      V2N=VAR2(2)
      V3X=VAR3(2)
      V3N=VAR3(2)
      DO 315 I1=2,L
      V1X=AMAX1(VAR1(I1),V1X)
  315 V1N=AMIN1(VAR1(I1),V1N)
      DO 320 I1=3,M1
      VMAX=AMAX1(VELMAX(I1),VMAX)
      VMIN=AMIN1(VELMIN(I1),VMIN)
      ACMAX=AMAX1(ACELMAX(I1),ACMAX)
      ACMIN=AMIN1(ACELMIN(I1),ACMIN)
      V2X=AMAX1(VAR2(I1),V2X)
      V2N=AMIN1(VAR2(I1),V2N)
      V3X=AMAX1(VAR3(I1),V3X)
      V3N=AMIN1(VAR3(I1),V3N)
  320 CONTINUE

      IF (IJ.GT.1) GO TO 402
      XP=0.0
      CALL DATE (DAY)
      CALL LETTER (8,.44,90.,.5,3.,6HH. KIM)
      CALL LETTER (10,.3,90.,1.,7.,DAY)

C     PLOT DISPLACEMENT

  402 CALL PLOT (1.5+XP,0.0,-3)
      CALL TYPE (M)
      IF (M.EQ.1) JI=5
      IF (M.EQ.2) JI=7
      IF (M.EQ.3) JI=8
      XX=1.2
      IF (M.EQ.3) BB(3)=B
      IF (M.EQ.3) BB(4)=B
      DO 440 I1=1,JI
      IF (M-2) 410,410,420
  410 ANUM=BA(I1)
      GO TO 430
  420 ANUM=BB(I1)
  430 CALL NUMBER (XX,6.4,.1,ANUM,90.,6H(F6.2),6)
      XX=XX+0.15
  440 CONTINUE
      BC(1)=TCL1
      BC(2)=TCL2
      DO 450 I1=1,2
      ANUM=BC(I1)
```

```
      CALL NUMBER (XX,8.0,.1,ANUM,90.,6H(F6.4),6)
      XX=XX+0.15
  450 CONTINUE
      XX=XX+0.1
      CALL CURVE (I,XX)

      CALL LETTER (18,.1,90.,XX+0.9,3.3,16HMEAN DISPLACEMENT,)
      IF (M.EQ.3) GO TO 660
      CALL LETTER (19,.1,180.,XX+4.,0.90,16HDISPLACEMENT (INCH))
      GO TO 660
  650 CALL LETTER (19,.1,180.,XX+4.,0.90,16HDISPLACEMENT (RAD.))
  660 XS=(DISMAX(L)-DISMIN(1))/4.
      YS=GAMA/8.
      VA=-(XX+5.)*XS+(AS(1)-DISMIN(1))
      W=-2.0*YS
      XA=XS
      YA=10.*YS
      XPS=90./4.
      VPA=-(XX+5.)*XPS
      SPA=XPS
      DI=DISMAX(L)
      IF (V1X-V1N.LT.1.E-15) V1N=-V1N
      XSV1=(V1X+V1N)/2.0
      IF (V1X+V1N.LT.1.E-15) V1X=2.*V1X
      CALL FRAME (XX,GAMA,DI,XS,V1X,XSV1)
      CALL PLTIN (XS,YS,VA,W,VA,XA,W,YA)
      DO 665 I1=1,L
      AS(I1)=-AS(I1)
      DISMAX(I1)=-DISMAX(I1)
      DISMIN(I1)=-DISMIN(I1)
      PA2(I1)=-PA2(I1)
      CALL UNITTO (DISMAX(I1),CC(I1),AX(I1),U1(I1))
      CALL UNITTO (DISMIN(I1),CC(I1),AY(I1),U1(I1))
  665 CONTINUE
      CALL PLTMPL (AS,CC,L)
      CALL DDASHM (AX,U1,L,1.6,.1,1,0.0,.1,IE,PA1,AS)
      CALL DDASHM (AY,U1,L,1.6,.1,1,0.0,.1,IE,PA1,AS)
      CALL PLTIN(XPS,YS,VPA,W,VPA,SPA,W,YA)
      DO 666 I1=1,L
      CALL UNITTO (PA2(I1),CC(I1),DISMAX(I1),U1(I1))
  666 CONTINUE
      CALL DDASHM (DISMAX,U1,L,.9,0.0,.1,1.0,.1,IE,PA1,AS)
      IF (V1X+2.*V1N.LT.1.E-15) V1N=0.0
      V=-(XX+4.)*XSV1-V1N
      XA=XSV1
      CALL PLTIN (XSV1,YS,V,W,V,XA,W,YA)
      DO 667 I1=1,L
      VAR1(I1)=-VAR1(I1)
      CALL UNITTO (VAR1(I1),CC(I1),DISMAX(I1),U1(I1))
  667 CONTINUE
      CALL DDASHM (DISMAX,U1,L,1.0,.1,2,0.4,.1,IE,PA1,AS)
```

```
C     PLOT VELOCITY
      CALL PLOT (XX+6.0,3.0,-3)
      CALL LETTER (14,.1,90.,3.5,3.3,14HMEAN VELOCITY,)
      IF (M.EQ.3) GO TO 570
      CALL LETTER (19,.1,180.,-.5,.50,19HVELOCITY (FT./SEC.))
      GO TO 660
  570 CALL LETTER (20,.1,180.,-.5,.50,20HVELOCITY (RAD./SEC.))
  680 XS=(VMAX-VMIN)/4.
      YA=-5.0*XS-VMIN
      XA=1.5*XS
      IF (V2X-V2N.LT.1.E-5) V2N=-V2N
      XSV2=(V2X-V2N)/2.0
      IF (V2X+V2N.LT.1.E-5) V2X=2.*V2X
      CALL FRAME (6.0,GAMA,VMAX,XS,V2X,XSV2)
      CALL PLTIN (XS,YS,VA,N,VA,XA,N,YA)
      DO 685 I1=2,M1
      VELMAX(I1)=-VELMAX(I1)
      VELMIN(I1)=-VELMIN(I1)
      CALL UNITTO (VELMAX(I1),CC(I1),AX(I1),U1(I1))
      CALL UNITTO (VELMIN(I1),CC(I1),AY(I1),U1(I1))
      VAR1(I1-1)=CC(I1)
      U1(I1-1)=U1(I1)
      AS1(I1-1)=-AS1(I1)
      AX(I1-1)=AX(I1)
      AY(I1-1)=AY(I1)
  685 CONTINUE
      CALL PLTMPL (AS1,VAR1,L-2)
      CALL ODASHM (AX,U1,L-2,1.0,.1,1,0.8,.1,IE,PA1,AS)
      CALL ODASHM (AY,U1,L-2,1.0,.1,1,0.8,.1,IE,PA1,AS)
      IF (V2X+2.*V2N.LT.1.E-5) V2N=0.0
      V=-4.*XSV2-V2N
      XA=XSV2
      CALL PLTIN (XSV2,YS,V,N,V,XA,N,YA)
      DO 687 I1=2,M1
      VAR2(I1)=-VAR2(I1)
      CALL UNITTO (VAR2(I1),CC(I1),DISMAX(I1),U1(I1))
      DISMAX(I1-1)=DISMAX(I1)
      U1(I1-1)=U1(I1)
  687 CONTINUE
      CALL ODASHM (DISMAX,U1,L-2,1.0,.1,2,0.5,.1,IE,PA1,AS)
      VPA=-5.0*XPS
      CALL PLTIN(XPS,YS,VPA,N,VPA,SPA,N,YA)
      DO 686 I1=2,M1
      CALL UNITTO (PA2(I1),CC(I1),DISMAX(I1),U1(I1))
      DISMAX(I1-1)=DISMAX(I1)
      U1(I1-1)=U1(I1)
  686 CONTINUE
      CALL ODASHM (DISMAX,U1,L-2,0.5,0.0,0,1.0,.1,IE,PA1,AS)
```

```
C     PLOT ACCELERATION
      CALL PLOT (6.0,0.0,-3)
      CALL LETTER (16,.1,[illegible],.5,3.3,18HMEAN ACCELERATION,)
      IF (M.EQ.3) GO TO 690
      CALL LETTER (27,.1,18[illegible],[illegible],.50,27HACCELERATION (IN./SQ. SEC.))
      GO TO 700
  690 CALL LETTER (28,.1,1[illegible],[illegible],.50,28HACCELERATION (RAD./SQ. SEC.))
  700 XS=(ACMAX-ACMIN)/4.
      VA=-5.*XS-ACMIN
      XA=3.*XS
      IF (V3X-V3N.LT.1.E-3) V3N=-V3N
      XSV3=(V3X-V3N)/2.0
      IF (V3X+V3N.LT.1.E-3) V3X=2.*V3X
      CALL FRAME (0.0,GAMA,ACMAX,XS,V3X,XSV3)
      CALL PLTIN (XS,YS,VA,W,VA,XA,W,YA)
      DO 710 I1=2,M1
      ACELMAX(I1)=-ACELMAX(I1)
      ACELMIN(I1)=-ACELMIN(I1)
      CALL UNITTO (ACELMAX(I1),CC(I1),AX(I1),U1(I1))
      CALL UNITTO (ACELMIN(I1),CC(I1),AY(I1),U1(I1))
      AS11(I1-1)=-AS11(I1)
      AX(I1-1)=AX(I1)
      AY(I1-1)=AY(I1)
      U1(I1-1)=U1(I1)
  710 CONTINUE
      CALL PLTMPL (AS11,VAR1,L-2)
      CALL DDASHM (AX,U1,L-2,1.6,.1,1,0.8,.1,IE,PA1,AS)
      CALL DDASHM (AY,U1,L-2,1.6,.1,1,0.8,.1,IE,PA1,AS)
      CALL PLTIN(XPS,YS,VPA,W,VPA,SPA,W,YA)
      CALL DDASHM (DISMAX,U1,L-2,0.9,0.0,0,1.0,.1,IE,PA1,AS)
      IF (V3X+2.*V3N.LT.1.E-3) V3N=0.0
      V=-4.*XSV3-V3N
      XA=XSV3
      CALL PLTIN (XSV3,YS,V,W,V,XA,W,YA)
      DO 711 I1=2,M1
      VAR3(I1)=-VAR3(I1)
      CALL UNITTO (VAR3(I1),CC(I1),DISMAX(I1),U1(I1))
      DISMAX(I1-1)=DISMAX(I1)
      U1(I1-1)=U1(I1)
  711 CONTINUE
      CALL DDASHM (DISMAX,U1,L-2,1.6,.1,2,0.8,.1,IE,PA1,AS)
      XP=5.5

 1500 I=I+N
      IJ=IJ+1
      IF (I.GE.J1) GO TO 3500
      GO TO 1001
 3500 IF(KSTOP.EQ.0) GO TO 999
      GO TO 3000
```

```
999 CALL PLOT (5.0,2.0,999)
    STOP
    END


    SUBROUTINE PARDEF (T,SETA2,B,RR,SX,SY,SRR,DH)

    DIMENSION C1(6),C2(6),C3(6),DH(6)

    COMMON/DEF/AB,AC,C1,C2,C3

    DATA (C1(I),I=1,4)/1.0,3*0.0/
    DATA (C2(I),I=1,4)/0.0,1.0,2*0.0/

    C1(5)=-COS(T)
    C1(6)=-SIN(T)
    C2(5)=SIN(T)
    C2(6)=-COS(T)

    F=3*RR

    A2=C1*C1+C2*C2-B*B-3.*RR
    A3=2.*F
    A1=A2/A3
    A4=1./SQRT(1.-A1*A1)

    SX=-A4*C1/F
    SY=-A4*C2/F
    SAA=-A4*(SIN(T)*C2-COS(T)*C1)/F
    SC=A4*(COS(T)*C2+SIN(T)*C1)/F
    SB=A4*(A3*B+A2*RR)/(2.*F*F)
    SRR=A4*(A3*RR+A2*B)/(2.*F*F)

    G=-RR*COS(SETA2+T)
    C3(1)=G*SX
    C3(2)=G*SY
    C3(3)=-SIN(SETA2+T)+G*SRR
    C3(4)=-SIN(T)+G*SB
    C3(5)=G*SAA
    C3(6)=G*SC

    DO 10 I=1,6
 10 DH(I)=2./(AB*AB+(-C1-AC)*(-C1-AC))*(A3*(-C1(I)-(C1*C1(I)+C2*C2(I)-
   *C3*C3(I))/AC)-(-C1-AC)*(C3(I)-C2(I)))

    RETURN
    END
```

```
      SUBROUTINE TYPE (M)
      IF (M-2) 10,20,30
   10 CALL LETTER (31,.15,90.,1.,3.,31HTRANSLATING FLAT FACED FOLLOWE )
      GO TO 40
   20 CALL LETTER (27,.15,90.,1.,3.,27HTRANSLATING ROLLER FOLLOWER)
      GO TO 40
   30 CALL LETTER (27,.15,90.,1.,3.,27HOSCILLATING ROLLER FOLLOWER)
      GO TO 50
   40 CALL LETTER (36,.1,90.,1.20,4.,36HTOTAL RISE                 =      (I
     $NCH))
      CALL LETTER (36,.1,90.,1.30,4.,36HRADIUS OF BASE CIRCLE      =      (I
     $NCH))
      CALL LETTER (36,.1,90.,1.00,4.,36HCAM ANGLE FOR RISE         =      (D
     $EG.))
      CALL LETTER (30,.1,90.,1.50,4.,30HRPM                        =      )
      CALL LETTER (36,.1,90.,1.  ,4.,36HINCREMENTAL CAM ANGLE      =      (D
     $EG.))
      IF (M-2) 70,50,60
   50 CALL LETTER (36,.1,90.,1.90,4.,36HROLLER RADIUS              =      (I
     $NCH))
      CALL LETTER (36,.1,90.,2.1 ,4.,36HOFFSET DISTANCE            =      (I
     $NCH))
      GO TO 70
   60 CALL LETTER (36,.1,90.,1.20,4.,36HTOTAL SWEEP                =      (D
     $EG.))
      CALL LETTER (36,.1,90.,1.30,4.,36HOFFSET DISTANCE            =      (I
     $NCH))
      CALL LETTER (36,.1,90.,1.00,4.,36HVERTICAL OFFSET            =      (I
     $NCH))
      CALL LETTER (36,.1,90.,1.05,4.,36HFOLLOWER ARM LENGTH        =      (I
     $NCH))
      CALL LETTER (36,.1,90.,1.00,4.,36HCAM ANGLE FOR SWEEP        =      (D
     $EG.))
      CALL LETTER (30,.1,90.,1.90,4.,30HRPM                        =      )
      CALL LETTER (36,.1,90.,2.10,4.,36HINCREMENTAL CAM ANGLE      =      (D
     $EG.))
      CALL LETTER (36,.1,90.,2.20,4.,36HROLLER RADIUS              =      (I
     $NCH))
   70 IF (M-2) 80,90,100
   80 CALL LETTER (52,.1,90.,1.90    ,4.,52HTOLERANCE OF LINK PARTS
     $       =      (I4CH))
      CALL LETTER (52,.1,90.,2.1     ,4.,52HTOLERANCE ON COMPONENT OF CAM
     $ PROFILE =      (I4CH))
      GO TO 110
   90 CALL LETTER (52,.1,90.,2.20    ,4.,52HTOLERANCE OF LINK PARTS
     $       =      (I4CH))
      CALL LETTER (52,.1,90.,2.     ,4.,52HTOLERANCE ON COMPONENT OF CAM
     $ PROFILE =      (I4CH))
      GO TO 110
  100 CALL LETTER (52,.1,90.,2.4     ,4.,52HTOLERANCE OF LINK PARTS
     $       =      (I4CH))
```

```
      CALL LETTER (52,.1,[illegible],2.[illegible]  ,[illegible],52HTOLERANCE ON COMPONENT OF CAM
     $ PROFILE =          (INCH))
  110 RETURN
      END
```

```
      SUBROUTINE CURVE (I,XX)
      GO TO (1,2,3,4,5,6,7,8,9,10,11,12) I
    1 CALL LETTER (40,.15,90.,XX,3.,
     $40HSTRAIGHT LINE OR CONSTANT VELOCITY CURVE)
      GO TO 13
    2 CALL LETTER (40,.15,90.,XX,3.,
     $40HPARABOLIC OR CONSTANT ACCELERATION CURVE)
      GO TO 13
    3 CALL LETTER (34,.15,90.,XX,3.,
     $34HCUBIC OR CONSTANT PULSE NO.1 CURVE)
      GO TO 13
    4 CALL LETTER (34,.15,90.,XX,3.,
     $34HCUBIC OR CONSTANT PULSE NO.2 CURVE)
      GO TO 13
    5 CALL LETTER (37,.15,90.,XX,3.,
     $37HSIMPLE HARMONIC MOTION OR CRANK CURVE)
      GO TO 13
    6 CALL LETTER (21,.15,90.,XX,3.,
     $21HDOUBLE HARMONIC CURVE)
      GO TO 13
    7 CALL LETTER (36,.15,90.,XX,3.,
     $36HCYCLOIDAL OR SINE ACCELERATION CURVE)
      GO TO 13
    8 CALL LETTER (30,.15,90.,XX,3.,
     $30HTRAPEZOIDAL ACCELERATION CURVE)
      GO TO 13
    9 CALL LETTER (39,.15,90.,XX,3.,
     $39HMODIFIED TRAPEZOIDAL ACCELERATION CURVE)
      GO TO 13
   10 CALL LETTER (14,.15,90.,XX,3.,
     $14H2-3 POLYNOMIAL)
      GO TO 13
   11 CALL LETTER (16,.15,90.,XX,3.,
     $16H3-4-5 POLYNOMIAL)
      GO TO 13
   12 CALL LETTER (18,.15,90.,XX,3.,
     $18H4-5-6-7 POLYNOMIAL)
   13 RETURN
      END
```

```
      SUBROUTINE FRAME (XX,GAMA,A,B,C,D)
      DIMENSION ANGL(12),PRIANG(6),CVA(6),VAR(6)
      CALL PLOT (XX+1.0,2.0,3)
      CALL PLOT (XX+1.0,10.,2)
      CALL PLOT (XX+5.0,10.,2)
      CALL PLOT (XX+5.0,2.0,2)
      CALL PLOT (XX+1.0,2.0,2)

      Y1=2.0
      DO 1 I=1,2
      X1=XX+2.0
      DO 2 J=1,3
      CALL PLOT (X1,Y1,3)
      CALL PLOT (X1,Y1+0.1,2)
      X1=X1+1.0
    2 CONTINUE
      Y1=9.9
    1 CONTINUE

      X2=XX+1.0
      DO 3 I=1,2
      Y2=2.8
      DO 4 J=1,9
      CALL PLOT (X2,Y2,3)
      CALL PLOT (X2+0.1,Y2,2)
      Y2=Y2+0.8
    4 CONTINUE
      X2=XX+4.9
    3 CONTINUE

      YY=1.72
      G=GAMA/10.0
      ANGL(1)=0.0
      DO 5 I=1,11
      ANGL(I+1)=ANGL(I)+G
      ANUM=ANGL(I)
      CALL NUMBER (XX+5.13,YY,.08,ANUM,90.,6H(F5.1),5)
      YY=YY+0.8
    5 CONTINUE

      CALL LETTER (10,.1,180.,XX+3.5,[illegible],10H(VARIANCE))
      CALL LETTER (16,.1,90.,XX+[illegible],[illegible],10HCAN ANGLE (DEG.))

      XX1=XX+1.04
      XX2=XX+1.31
      XX3=XX+2.14
      VAR(1)=C
      PRIANG(1)=90.0
      CVA(1)=A
```

```
      DO 6 I=1,5
      PREANG(I+1)=PREANG(I)-30.
      CVA(I+1)=CVA(I)-B
      VAR(I+1)=VAR(I)-D
      ANUM=PREANG(I)
      BNUM=CVA(I)
      CNUM=VAR(I)
      CALL NUMBER (XX1,10.0,.05,ANUM,[illegible],FM(F4.1),[illegible])
      CALL NUMBER (XX2,.75,.05,BNUM,[illegible],FM(F14.2),14)
      IF(I.GE.4) GO TO 7
      CALL NUMBER (XX3,0.[illegible],.05,CNUM,[illegible],FM(E11.5),11)
      CALL LETTER (10,.1,[illegible],XX5,[illegible],1[illegible]F(  ))
    7 XX1=XX1+1.0
      XX2=XX2+1.0
      XX3=XX3+1.0
    6 CONTINUE
      CALL LETTER (21,.1,[illegible],XX+3.[illegible],[illegible],21HPRESSURE ANGLE ([illegible]))

      CALL PLOT (XX+0.85,3.2,3)
      CALL PLOT (XX+0.85,3.2,2)
      CALL LETTER (26,.1,[illegible],XX+[illegible],[illegible],2 H-.-.-.-.- THREE SIGMA BAND)
      CALL LETTER (19,.1,[illegible],XX+[illegible],[illegible],[illegible]H-.-.-.-.- VARIANCE,)
      CALL LETTER (24,.1,[illegible],XX+[illegible],[illegible],[illegible]H- - - - - PRESSURE ANGLE)
      RETURN
      END


      SUBROUTINE NUMBER(XA,YA,HEIGHT,ANUM,THETA,FMT,[illegible])
      DIMENSION BCD(2)
      ENCODE(NN,FMT,BCD)ANUM
      CALL SYMBOL(XA,YA,HEIGHT,BCD,THETA,NN)
      RETURN
      END


      SUBROUTINE STRAIT (H,P,V,S,S1,S11,[illegible])
      S=H-P
      S1=H-V
      S11=0.0
      S[illegible]=0.0
      RETURN
      END
```

```
      SUBROUTINE PARABOL(H,T,BETA,P,V,S,S1,S11,S3,CV)
      IF (T.GT.BETA/2.0) GO TO 10
      S=2.0*H*P*P
      S1=4.0*H*P*V
      S11=4.0*H*CV
      GO TO 20
   10 S=H*(1.0-2.0*(1.0-P )**2)
      S1=4.0*H*V*(1.0-P )
      S11=4.0*H*CV
   20 S3=0.0
      RETURN
      END



      SUBROUTINE SHO (H,P1,V1,S,S1,S11,S3,Z)
      S=(H/2.0)*(1.0-COS(P1))
      S1=(H*V1/2.0)*SIN(P1)
      S11=(H/2.)*Z*COS(P1)
      S3=-(H/2.)*V1*Z*SIN(P1)
      RETURN
      END



      SUBROUTINE CUBIC1 (H,BETA,P,V,S,S1,S11,S3,CV,EV)
      IF (T.GT.BETA/2.0) GO TO 10
      CP=P*P
      S=4.0*H*CP*P
      S1=12.0*H*V*CP
      S11=24.0*H*CV*P
      GO TO 20
   10 CP=(1.0-P)*(1.0-P)
      S=H*(1.0-4.0*CP*(1.0-P))
      S1=12.0*H*V*CP
      S11=-24.0*H*CV*(1.0-P)
   20 S3=24.0*H*EV
      RETURN
      END



      SUBROUTINE CUBIC2 (H,P,V,S,S1,S11,S3,CV,EV)
      S=H*P*P*(3.0-2.0*P)
      S1=6.0*H*P*V*(1.0-P)
      S11=6.0*H*CV*(1.0-2.0*P)
      S3=-12.*H*EV
      RETURN
      END
```

```
      SUBROUTINE CHO (H,P1,V1,S,S1,S11,S3,Z)
      CO1=COS(2.*P1)
      S=1.5*H*((1.-COS(P1))-0.2*(1.-CO1))
      S1=1.5*H*V1*(SIN(P1)-0.5*SIN(2.*P1))
      S11=0.5*H*Z*(COS(P1)-CO1)
      S3=1.5*H*V1*Z*(-SIN(P1)+2.*SIN(2.*P1))
      RETURN
      END



      SUBROUTINE CYCLOID (H,P1,V,V1,S,S1,S11,PI,S3,CV)
      S11=SIN(2.*P1)
      S=1/PI*(P1-0.5*S11)
      S1=H*V*(1.0-COS(2.*P1))
      S11=2.5*H*V1*V*S11
      S3=+6.*H*V1*CV*COS(2.*P1)
      RETURN
      END



      SUBROUTINE TRAPEZO (H,T,BETA,P,V,S,S1,S11,S3,CV,EV)
      IF (T.GT.BETA/2.0) GO TO 10
      CP=P*P
      S=14.0/8.0*H*CP*P
      S1=64.0/3.0*H*V*CP
      S11=128.0/3.0*H*P*CP
      S3=128./3.*H*EV
      GO TO 30
   10 IF (T.GT.2.0-BETA/2.0) GO TO 20
      H1=H*(1.0/72.0-1.0/3.0*P+8.0/3.0*P*P)
      S1=P*V*(-1.0/3.0+16.0/3.0*P)
      S11=H*CV*16.0/3.0
      S=H1
      GO TO 30
   20 CP=P*P
      S=H*(7.0/18.0-16./3.0*P+32.0/3.0*CP-64.0/9.0*CP*P)
      S1=P*V*(-16./3.+64./3.*P-64./3.*CP)
      S11=H*CV*(64./3.-128./3.*P)
      S3=-128./3.*H*EV
   30 RETURN
      END
```

```
      SUBROUTINE MODIFA (H,T,BETA,P,P1,V,S,S1,S11,PI,S3,CV,EV)
      COM*C /ABC/Q,U,C
      A=8.*PI*Q
      B=32.*U*Q
      P11=P1*4.0
      P12=P11-PI
      IF(T.GT.BETA/8.0) GO TO 10
      S=Q*H*(2.0*P-1.0/G*SIN(P11))
      S1=Q*2.0*H*V*(1.0-COS(P11))
      S11=A*H*CV*SIN(P11)
      S3=B*H*EV*COS(P11)
      GO TO 30
   10 IF (T.GT.3.*BETA/8.) GO TO 20
      S=H*Q*(-1./G+P*(2.-PI+8.*PI*P)+PI/10.)
      S1=H*Q*V*(2.-PI+8.*PI*P)
      S11=A*H*CV
      S3=0.0
      GO TO 30
   20 S=H*Q*(-PI/2.+(2.+G)*P-1./G*SIN(P12))
      S1=H*Q*V*(2.+G-2.*COS(P12))
      S11=A*H*CV*SIN(P12)
      S3=B*H*EV*COS(P12)
   30 RETURN
      END
```

```
      SUBROUTINE POLY23 (H,P,V,S,S1,S11,S3,CV,EV)
      CP=P*P
      S=H*(3.0*CP-2.0*CP*P)
      S1=H*V*6.0*(P-CP)
      S11=H*CV*(6.0-12.0*P)
      S3=-12.*H*EV
      RETURN
      END
```

```
      SUBROUTINE POLY345 (H,P,V,S,S1,S11,S3,CV,EV)
      CP=P*P
      S=H*(10.*CP*P-15.*CP*CP+6.*CP*CP*P)
      S1=H*V*(30.*CP-60.*CP*P+30.*CP*CP)
      S11=H*CV*(60.*P-180.*CP+120.*CP*P)
      S3=60.*H*EV*(1.-6.*P+6.*CP)
      RETURN
      END
```

```
SUBROUTINE PCL4567 (H,P,V,S,S1,S11,S3,CV,EV)
CP=P*P
CP1=CP*CP
S=H*(35.*CP1-64.*CP1*P+70.*CP1*CP-20.*CP1*CP*P)
S1=H*V*(140.*CP*P-420.*CP1+420.*CP1*P-140.*CP1*CP)
S11=H*CV*(420.*CP-1[illegible].*CP*P+2100.*CP1-540.*CP1*P)
S3=540.*EV*(P-6.*CP+10.*P*CP-5.*CP1)
RETURN
END
```

CNTOT 1020