A Vibrating Reed Type Electrometer-Amplifier for the Measurement of Direct Currents

A Thesis

Submitted in Partial Fulfilment of the Requirements

for the Degree of Master of Arts in

the Department of Physics of

McMaster University

by

Donald H. Glenny B. A.

Hamilton Ontario

May, 1947

McMASTER UNIVERSITY LIBRARY

Acknowledgements

The author wishes to thank Dr. H. G. Thode whose assistance and encouragement made this work possible; also Dr. F. P. Lossing who aided in the development of the instrument and Mr R. B. Shields who offered much helpful advice. Thanks are also due to Mr. R. L. Graham and Dr. M. W. Johns who pioneered this vibrating reed work at McMaster. He is also indebted to the National Research Council of Canada for financial aid in the form of a bursary which made this research possible.

Table of Contents

INTRODUCTION

1. Introduction page 1
2. Theory 3

EXPERIMENTAL

3. Electrometer 5
4. Amplifier 9
5. Operation 17
6. Performance 17

DISCUSSION

7. Discussion 22

A Vibrating Reed Type Electrometer-Amplifier for the Measurement of Direct Currents

INTRODUCTION

The literature on direct current amplification during the past twenty-five years shows extensive work aiming at the reduction of slow drift and zero signal fluctuations inherent in the output of most D.C. amplifiers. Slow drift may be the result of cha nges in supply voltages with time, or of changes in cathode emission with time, or of combinations of these and other factors. Extensive use has been made of balanced circuits for which the output is independent of these factors. In the past ten years the principle of negative feedback has been employed to reduce drifting and also to reduce the effect of tube characteristics on gain. Zero line fluctuations may be due to electromagnetic pick up, vibration of the tube elements, thermal noise across any resistor in the circuit, or to irregular or periodic changes in the emission from the cathode. In a multi-stage D.C. amplifier the coupling between stages is direct so that any noise originating in one stage will be further amplified and reach an appreciable value in the output. The negative feedback amplifier compensates very well for drift effects occurring in the final amplifying stages but is very sensitive to drift arising in the initial stages due to changes in cathode reference potentials. Further sensitivity with these complete feedback D.C. amplifiers is now being limited by this slow drift and zero line fluctuation.

Limitations of this nature do not occur in A.C. amplification. Coupling between stages is made through condensers which block any direct current drift effects originating in any of the tubes. Tuned resistance-capacitance coupled amplifiers may be designed[1.] to pass a very narrow band

of frequencies and exclude all others. This would indicate than an amplifier can be built that would amplify only the signal frequency, would block drift effect, having the nature of extremely low frequency variations, and would block tube and thermal noise which may be considered very high frequency variations.

An A.C. operated D.C. amplifier in which the direct current signal is converted into an alternating signal prior to being amplified would have the advantages of A.C. amplification. With these advantages it is hoped that the sensitivity available for D.C. amplification may be increased from five to tenfold. There is evidence in the literature[2] that such an instrument has been developed for the oil industry in the United States during the past eight years. In this reference Messrs. Scherbatskoy and Fearon indicate that they have been successful in constructing a suitable "Vibrating reed capacitative commutator" for the conversion of a direct current into an alternating signal. Work of this nature has also been carried out at the University of Chicago's Metallurgical Laboratory and a preliminary unpublished report, # M-CP-2141, has been made on the results of this work. They replaced the chopper unit in a Brown self-balancing potentiometer type amplifier-recorder with a vibrating reed electrometer. This electrometer uses a vibrating reed and a single stage of amplification, a type 959 pentode. Their report indicates that they have an amplifier of great stability in which the drift amounts to less than 0.2 millivolts in twenty-four hours with a 10^{11} ohm input resistor. It will measure a current of 10^{-13} amperes to 1% accuracy in twenty-four seconds.

A similar type of amplifier is being developed in this laboratory to operate, if possible, in conjunction with the mass spectrometer and is described in the following pages.

Theory

The theory of the vibrating reed electrometer is quite straightforward. Consider a condenser of capacitance C connected between grid and cathode of an infinite impedance vacuum tube. If a charge is placed on the plates of the condenser the voltage across the condenser will follow the relation

$$V = Q/C$$

and this voltage will appear between grid and cathode of the vacuum tube. If this capacitance of the condenser changes, the voltage appearing across the input of the vacuum tube will vary inversely as C. If this capacitance is varied in a sinusoidal manner, we have a method of converting a D.C. signal, applied to the plates of the vibrating condenser, into a high frequency wave which may be applied to the grid of the vacuum tube and be amplified by it. Since no vacuum tube has infinite impedance it is necessary to isolate the vibrating condenser from the grid of the tube with an air condenser. This air condenser prevents the charge from leaking off the vibrating condenser but transmits the alternating signal to the grid. It also prevents charges picked up by the grid of the tube from affecting the charge applied to the alternating condenser. It is necessary that the total impedance shunting the vibrating condenser, that is $R_1 + X_{c1}$, be high in comparison to its own impedance, $\frac{1}{2\pi f \Delta C}$, to prevent the alternating signal from flowing around the closed circuit.

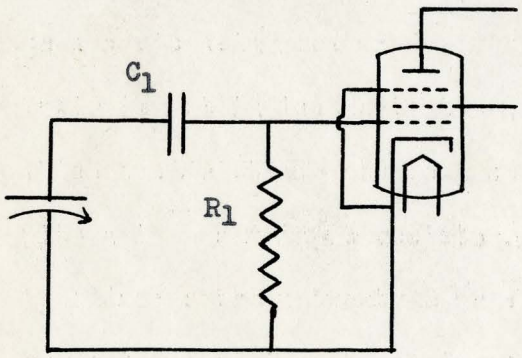

Fig. 1

The variable capacitance is made up of an anvil of area A, under which a reed is being driven at a frequency f. Consider the ideal case of

two plates which remain parallel throughout the cycle. If the distance between the plates at rest is d_o then

$$C = \frac{A}{4\pi d_o}$$

and $$V_o = \frac{4\pi d_o Q}{A}$$

If the displacement at any instant from the stationary position be designated d then

$$d = a \sin 2\pi ft$$

where a is the maximum amplitude of the vibration.

The instantaneous value of the distance between the plates is given by

$$d_o - a \sin wt$$

so that the voltage appearing across the plates of the condenser will be

$$V = \frac{4\pi Q}{A} (d_o - a \sin wt)$$

$$= \frac{4\pi Q d_o}{A} - \frac{4\pi Q}{A} a \sin wt$$

$$\text{or } V = V_o - \frac{4\pi Q}{A} a \sin wt$$

This voltage then is the summation of a D.C. and an A.C. component with R.M.S. value $\frac{4\pi Qa}{\sqrt{2}\,A}$.

The conversion efficiency of the vibrating reed is given by

$$\frac{V_{a.c.}}{V_{d.c.}} = \frac{\frac{4\pi Q}{A} \cdot \frac{a}{\sqrt{2}}}{\frac{4\pi Q d_o}{A}} = \frac{a}{\sqrt{2}\, d_o} = 0.707 \frac{a}{d_o}$$

This relation indicates that the maximum conversion efficiency possible with this ideal case, would be 70% occurring when the maximum amplitude of vibration equals the rest distance between plates.

The ideal case of continuously parallel plates cannot be completely realized in our design which uses a long vibrating reed clamped at one end

and driven with maximum amplitude of vibration at the free end. Therefore the conversion efficiency will be lowered and the waveform of the signal distorted. However with the type of reed mounting and drive discussed in the next section the waveform appearing on the plate of the first tube is very close to pure sinusoidal indicating that the ideal case is being approached.

The A.C. output of this first tube will be independent of current changes within the tube which are not of the operating frequency. It will depend only on the D.C. input, the conversion efficiency of the reed and the gain of the stage.

EXPERIMENTAL

Electrometer

The vibrating reed used is of highly polished spring steel with dimensions 8.0 cm. x 1.6 cm. x 0.055 cm. The anvil is brass, 1.25 cm. square. In order to reduce the effects of contact potential both the reed and the anvil are plated with a very thin uniform layer of gold. Even with the input shorted there is a charge on the plates of the condenser as a result of this contact potential due to the difference in thermodynamic energies of the electrons in the metal of the reed and anvil. The contact potential is dependent on surface conditions and changes in these will vary this potential. These surface factors include oxidation, tarnishing, cleanliness, and adsorption of gases or vapours by the metal of the surface. The use of highly polished gold plating reduces the components of the contact potential variation due to oxidation or tarnishing. Before operation the reed and anvil are carefully cleaned with absolute alcohol and thereafter

handled only with tissue paper. In the future, if necessary, the reed will be operated in a partial vacuum or in an atmosphere of pure argon, as has been done at Chicago, to reduce these effects still more.

The reed is held rigidly in a brass vise. The anvil is suspended from a small sheet of polystyrene. The polystyrene is supported by four pillars of bakelite and fastened by four screws. Thick rubber spacers between the polystyrene and the pillars enable the condenser spacing d_o to be varied and allow for adjustment of the anvil into a parallel position above the reed.

The reed is driven quite satisfactorily by a small earphone electromagnet. In order to reduce interference and pickup from external sources it was decided to drive the reed at, and tune the amplifier to an audio frequency. Originally the driving frequency used was 60 cycles per second but more satisfactory amplifier operation has been achieved with a frequency of 450 cycles per second. This higher frequency enables all the R-C combinations beyond the input circuit to be lowered, decreasing the overall time constant of the circuit. This was considered necessary since excessive lag was encountered in the original circuits using a 60 cycle drive.

It has been found that a reed whose length has been adjusted to vibrate at 75 cycles per second will also vibrate at 450 cycles per second, six times the fundamental frequency, with reduced amplitude in a manner as indicated in the diagram. The single node is approximately 1/6 of the length of the reed from the free end. The electromagnet is located beneath this free end and the anvil is in a position above the anti-node.

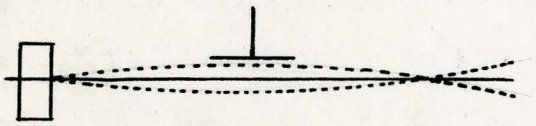

Fig. 2

Since the amplitude is much less than 1 mm. and since the anvil covers only 1.25 cms. squared of the reed about the anti-node we are approaching ideal conditions of continuously parallel plates. As mentioned previously this gives a vibrating condenser in which the variation in capacitance is very nearly a pure sinusoidal function of time.

The rest capacitance of the vibrating reed condenser will be

$$C_0 = \frac{1.56}{(.9)\,4\pi(0.05)} = 30 \text{ mmf.}$$

for a rest distance $d_0 = 0.5$ mm. It is very difficult to make an accurate measurement of the amplitude of vibration without special instruments but a fairly accurate approximation would be 0.2 mm. This gives a ΔC value of approximately 2 mmf. so that the impedance will be in the neighbourhood of 2×10^8 ohms at the drive frequency. This requires a resistance of 10^9 ohms in the grid circuit of the first tube. The ratio of the A.C. output to D.C. input, giving the conversion efficiency, is found to be 23% for this vibrating condenser. This compares with the 20% efficiency claimed of the Chicago circuit.

Two views of the reed assembly are shown on page 8. The bakelite pillar shown to the one side of the vise is used to mount the coupling air condenser. In the present model this entire reed assembly is mounted in a vacuum tight box along with the input 10^{11} ohm resistor and the coupling air condenser C_1. The reed drive cable enters the chamber through a double Kovar seal and other electrical leads enter through three single Kovar seals in the top of the chamber. In this experimental model the first stage of amplification, a 954, is mounted and shielded upon the brass chamber. Later it is hoped that this tube may be mounted within this or a larger chamber.

VIBRATING REED ASSEMBLY

FULL SCALE

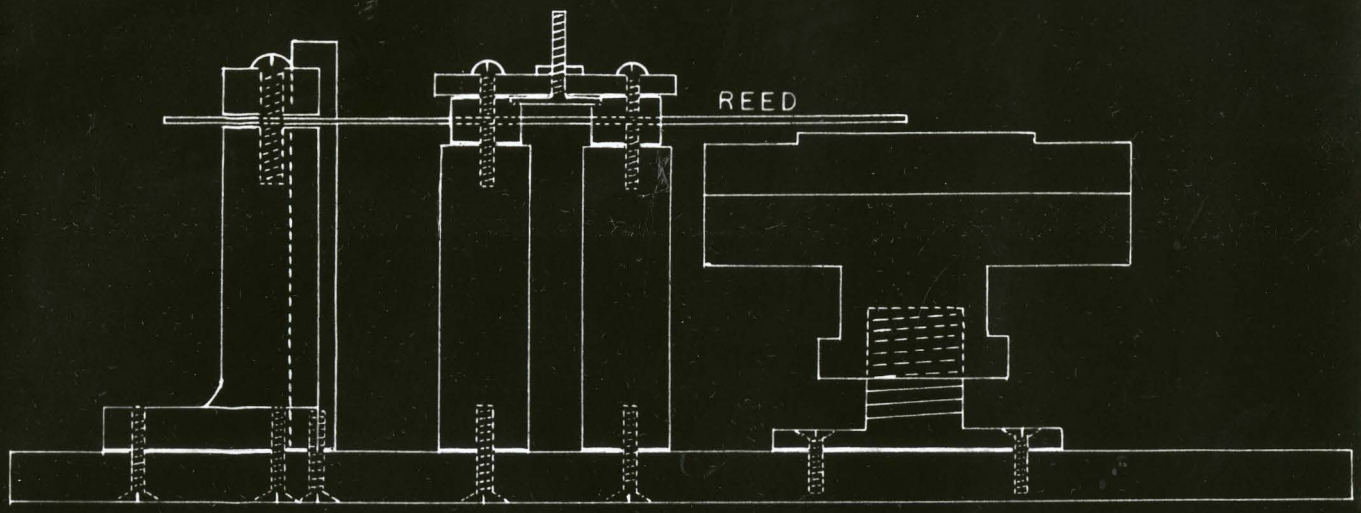

VISE

ANVIL & SUPPORT

DRIVER

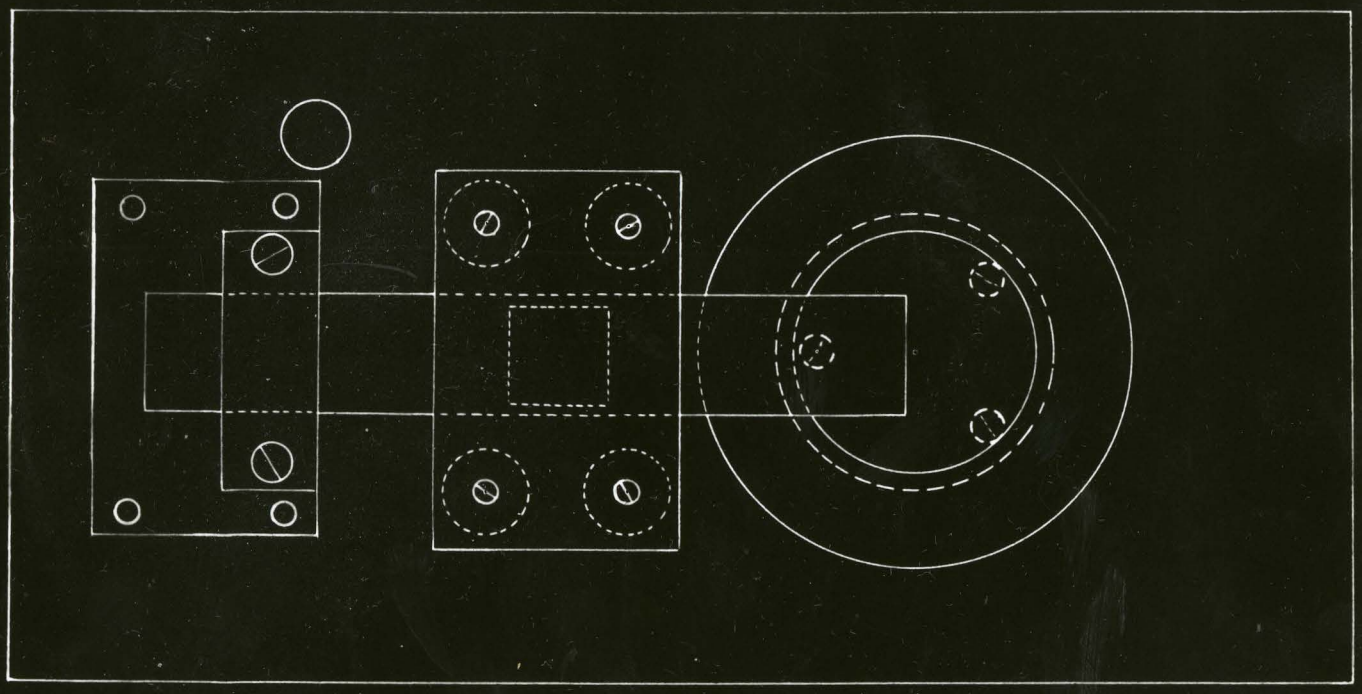

Fig. 3

Amplifier

The amplifier used in conjunction with this vibrating reed electrometer employs complete negative feedback so that inaccuracies due to non-linearity in the amplifier or recording instrument will be minimized. Since the conversion efficiency of the vibrating reed may be considered as part of the gain of the amplifier, changes in it due to amplitude or frequency changes of the driver will not cause inaccuracies in the output.

The action of the complete amplifier is described below and a block diagram of it is shown on page 14. A direct current voltage applied to the plates of the vibrating condenser is converted into direct and alternating components. The alternating component of the voltage is amplified through a stable four stage audio amplifier whose output is coupled to a full wave phased rectifier. This rectified signal is applied to the grid of a cathode follower whose output is fed back 180° out of phase with the input to the lower end of the input grid leak giving a complete negative feedback amplifier. This feedback voltage will have a value given by the equation

$$V_{f.b.} = \frac{G}{(G+1)} V_{input}$$

so that for a large gain G of the amplifier it may be taken as a measure of the input signal. Thus an amplifier with large voltage gain is used to provide a constant and accurate current amplification only. The current gain is given by the ratio of the input and output resistances.

$$C.G. = R_{input} / R_{output}$$

The feedback signal may be measured by some sensitive voltmeter. During the development of the instrument a Brown amplifier-chart-recorder was used with a full scale reading of 3 millivolts. For most work however, the use of a potential divider allowed a maximum output signal of 100 millivolts to

be measured by the Brown.

The circuit for the electronic feedback amplifier used in conjunction with the vibrating reed is shown on page 15. The input current flowing through the 10^{11} ohm resistance develops a voltage across this resistance which is applied to the vibrating reed condenser. The alternating component of the voltage from this converter is applied to the grid of the first tube, a 954, through the condenser C_1. This tube is operated with plate and screen voltages at low values taken from the point B which is 90 volts above ground. This gives a fairly stable first stage with a voltage gain of 1.5. The output of this tube passes through a single wire shielded cable to the following stages which are built up on a separate chassis. The second and third stages have a combined voltage gain of 2000 using two 12SF5's. The last amplifying stage uses a 6V6 beam power amplifier with maximum gain of 25. This latter gain is adjustable by means of the potentiometer in the grid circuit of the tube.

The output of the amplifier is transformer coupled to a full wave phased rectifier employing three 12SC7's - T_5, T_6, T_7. The action of the phased rectifier is explained with the aid of the diagram on the next page in which we consider four triodes - T_5, T_6', T_6'', T_7. An alternating voltage is applied to the grids of the four tubes from four transformer secondaries. The primaries are connected in parallel and receive their power from the oscillator unit shown on page 16. At any instant the voltages will have polarity as indicated. During the first half cycle the plate of T_5 is negative and the grid positive; the plate and grid of T_6' are both positive; those of T_6'' are both negative; and the plate of T_7 is positive and the grid negative, all with respect to cathode. For this instance only T_6' conducts

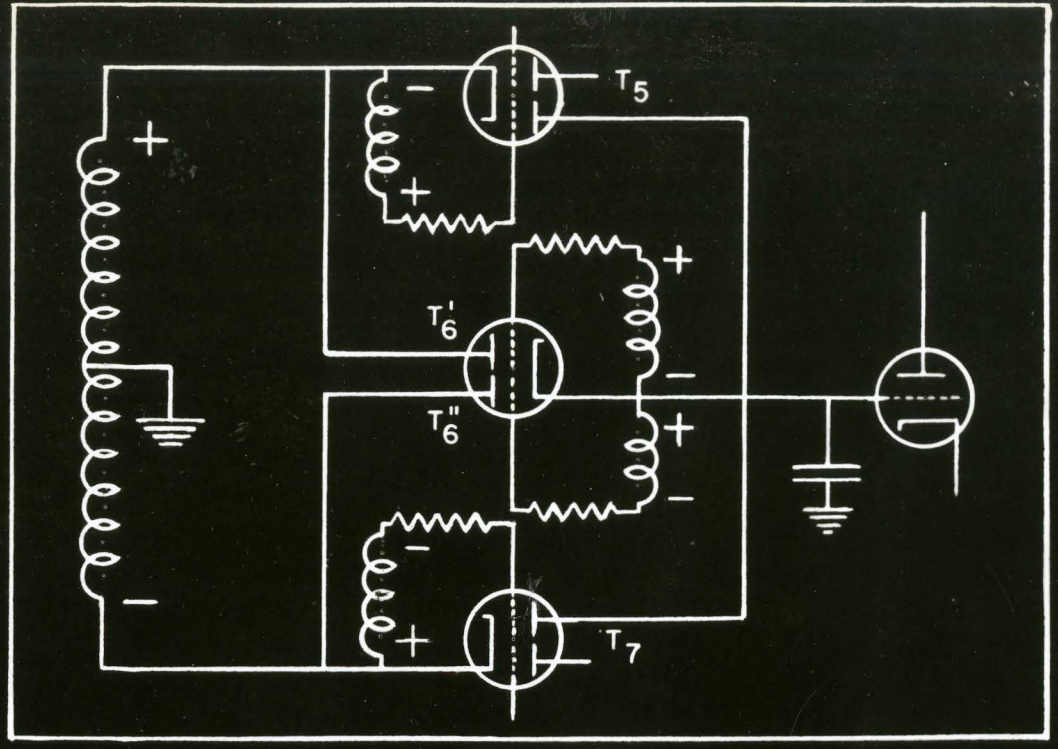

Fig. 4

Fig. 5

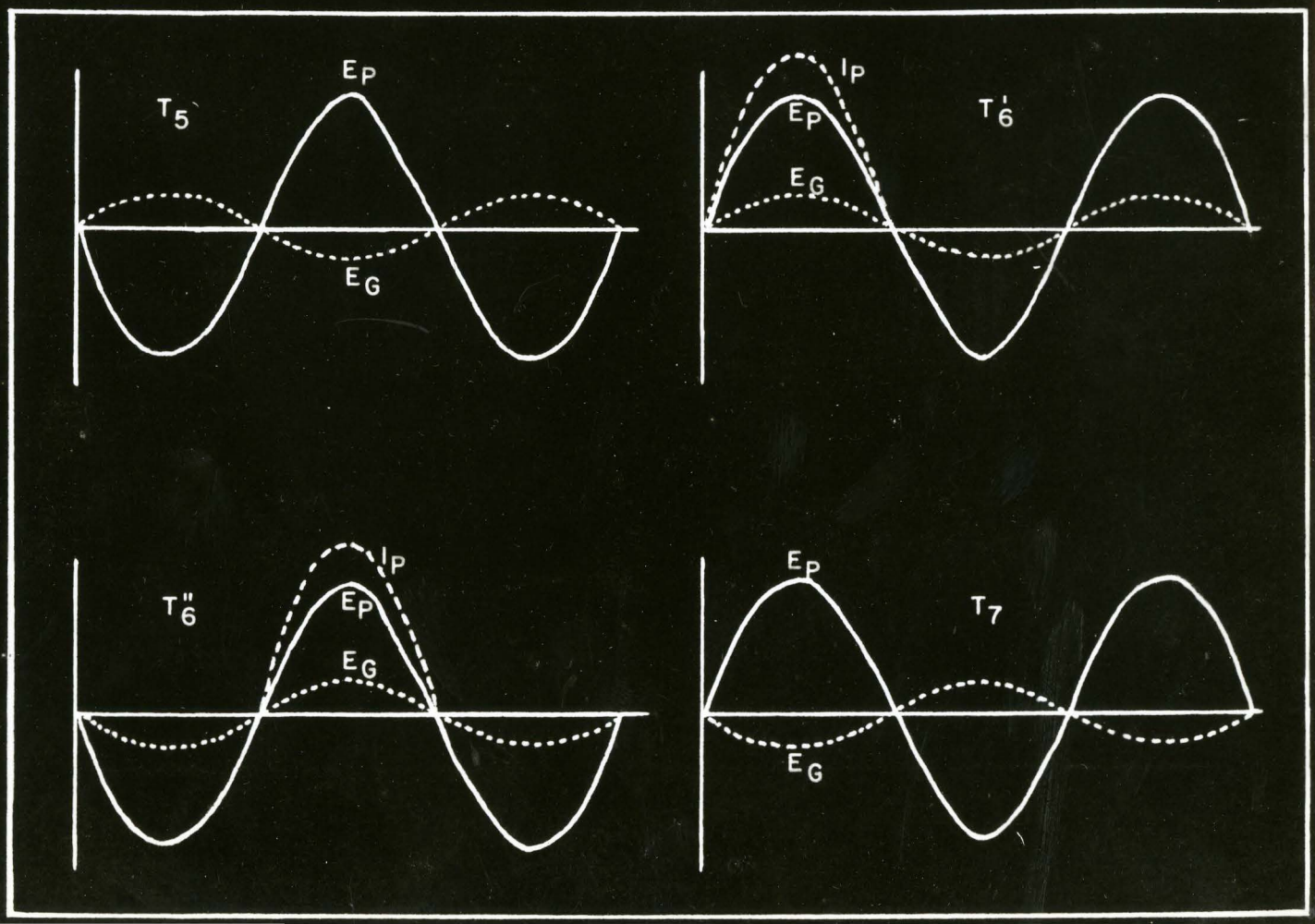

since T_7 is prevented from doing so by a sufficiently negative grid. During the next half cycle all signs will be reversed and $T_6^{\prime\prime}$ will conduct. This is shown diagrammatically in fig. 5.

The action of this circuit then is to charge the Condenser C positively during both half cycles introducing a positive signal on the grid of the cathode follower. If the polarity of the input signal is reversed the amplified A.C. signal receives a 180 degree change of phase so that the signs of the voltage across the coupling transformer are interchanged for the instance depicted in figure 4 so that the tubes T_5 and T_7 will conduct during the alternate half cycles. The condenser C is charged negatively in this case applying a negative voltage to the grid of the cathode follower. The elements of the phased rectifier tubes are arranged to assure a feedback signal of the proper polarity. The A.C. signal through the amplifier is reduced to such a low value that there is no danger of overloading which would result in non-linearity and oscillation.

There is a complete voltage gain of about 20 from the grid of the 6 V 6 to the grid of the cathode follower. The gain of the 12J5 cathode follower is 0.83. The complete gain of the amplifier will be the product of the gains of the various stages.

Voltage gain G = .2 x 1.5 x 2000 x 15 x 0.8 = 7000. This may be taken as a maximum value since full gain in the 6 V 6 stage is seldom used.

The purpose of the potentiometer circuit in the feedback line is to provide a fine adjustment for the cancelling out of the contact potential developed between the plates of the vibrating condenser.

Fluctuations due to cathode temperature changes are reduced by heating the filaments of all critical tubes from stabilized direct current provided by the regulated power supply shown on page 16. This supply is of the standard

design used in this laboratory. It supplies 180 milliamperes at 250 volts. The 90 volt tap for the 954 plate and screen voltages is shown at B. The circuit which supplies a negative 105 volts for the cathode follower is shown along with the regulated supply. Since the current drain from the 105 volt line is small, sufficient filtering was obtained from the half wave rectifier shown with a condenser input RC filter. A constant 105 volts is obtained across the voltage regulator tube as indicated.

The reed drive voltage and the phased rectifier voltage are obtained from the oscillator and the amplifier circuit shown on page 16. The primary of a #369 Hammond transformer is used to couple between plate and grid of the oscillator. The frequency range is determined by the condenser C_{25} across this choke. Within this range the frequency may be varied through 90 cycles with the 3000 ohm helipot in the grid circuit. This enables the oscillator to be tuned to the natural frequency of the reed. Two 6V6 power amplifiers supply an undistorted 50 volts to drive the vibrating reed, and an undistorted 125 volts with 175 volts maximum to the phased rectifier primaries. The input to the second power amplifier is taken from a phase shifting circuit. This corrects for the cumulative phase shifts throughout the amplifier so that the plate and grid voltages of the 12SC7 rectifiers are exactly in phase or 180 degrees out of phase as the case may be.

The three power supplies and the oscillator unit are built up on a 17" x 14" x 4" chassis with a 14" front panel. The 954 is mounted in a shielded box upon the reed chamber and the rest of the amplifier is assembled on a 16" x 8" x 4" chassis with a 10½" front panel. All inter-chassis connections are made through shielded cables and plugs. To prevent coupling between the input and the output it was found necessary to use single wire shielded cable for the line from the plate of the 954 to the grid of the first 12SF5 and for the feedback line.

ELECTROMETER—AMPLIFIER

BLOCK DIAGRAM

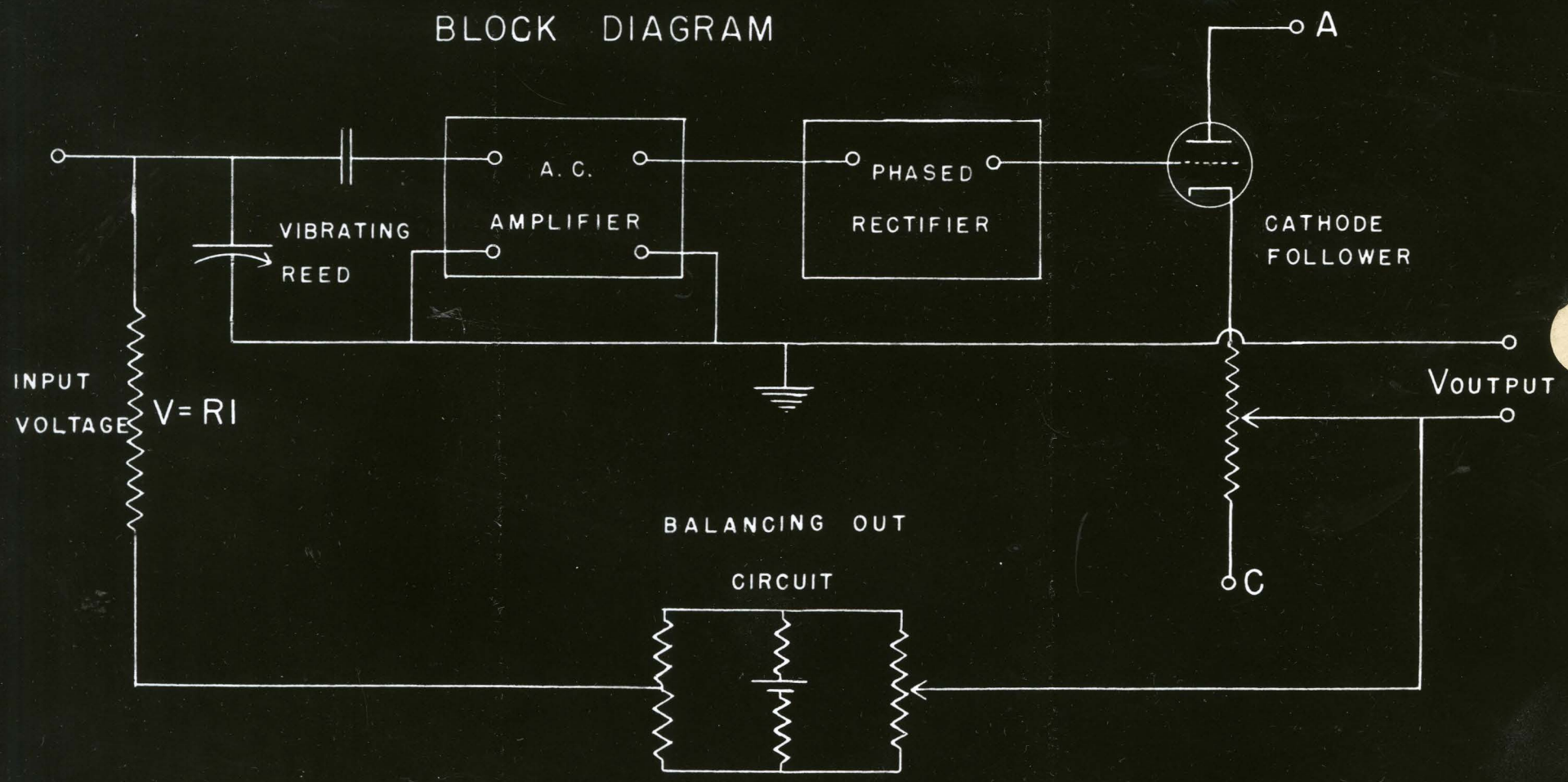

Fig. 6

ELECTROMETER—AMPLIFIER

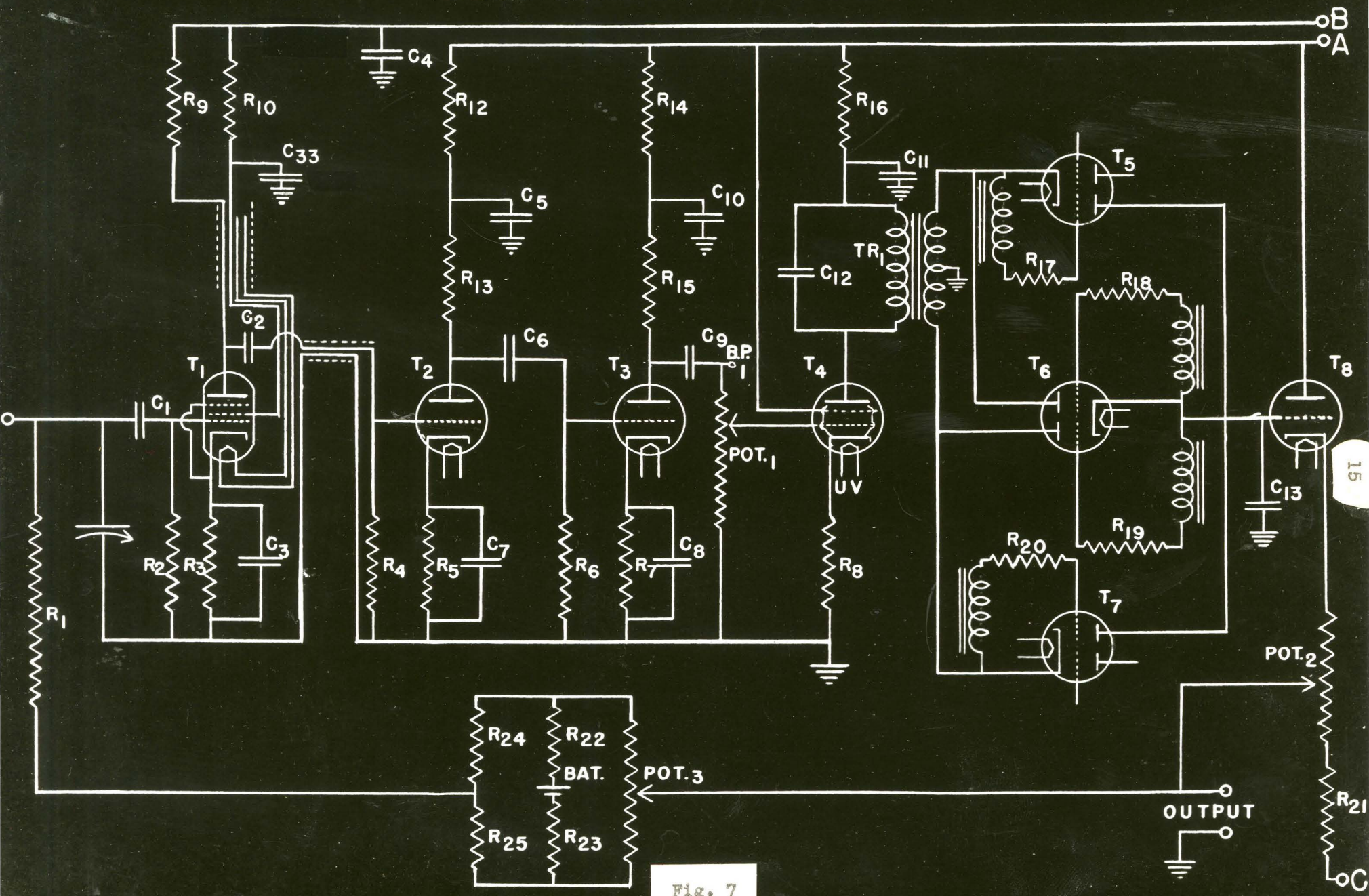

Fig. 7

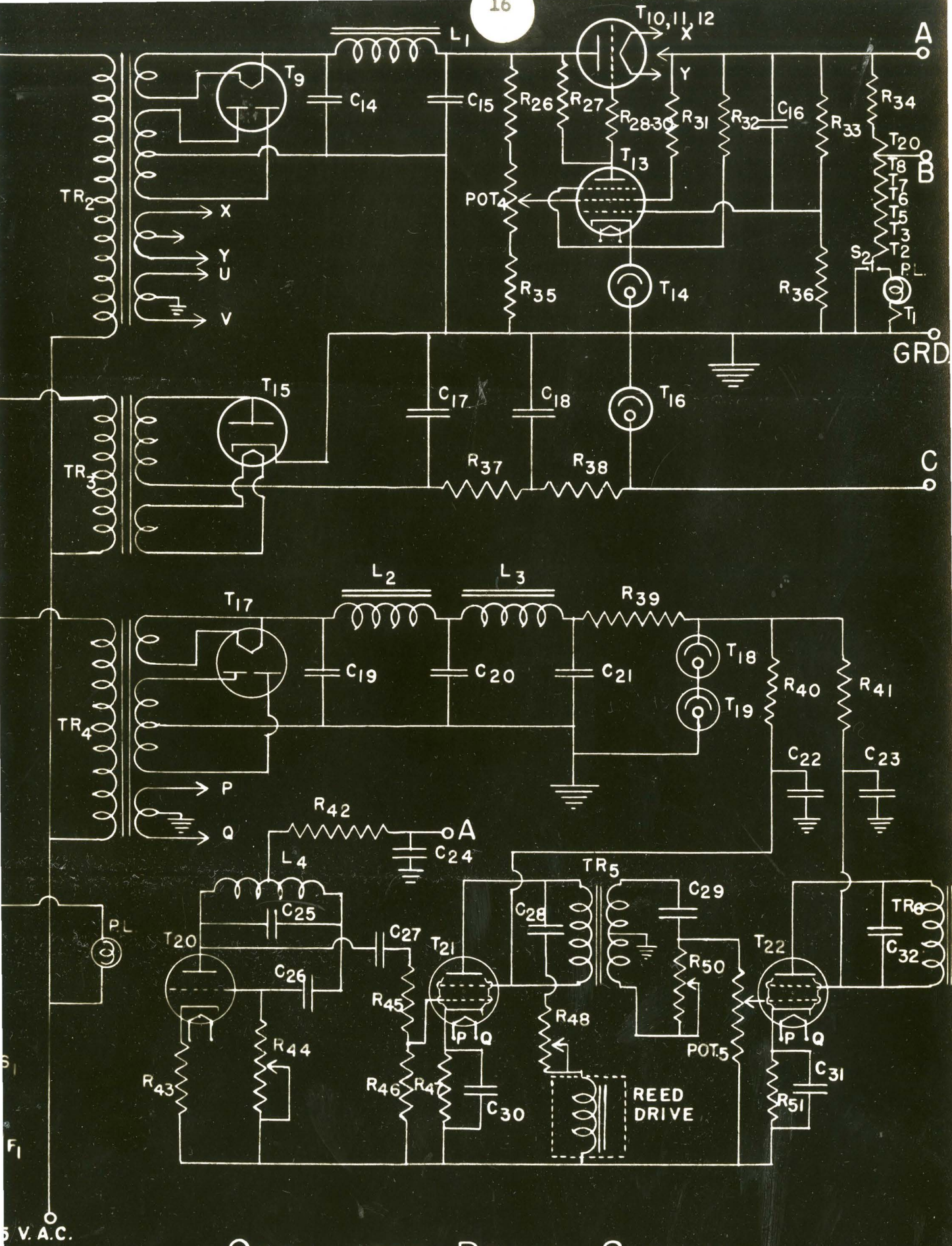

OSCILLATOR—POWER SUPPLY

Fig. 8

Operation

With the exception of the battery used in the balancing out potentiometer the instrument is operated completely with 25 cycle, 110 volt power. The power supplies for the unit are turned on by means of S_1. After these have warmed up for one minute, the amplifier proper may be put into operation by means of S_2 which connects the filament of the 954 into the heater line. This procedure was considered advisable in order that the initial surge of current would not pass through the filament of this critical tube. The gain control, Pot.1, should be set at the low end before any further adjustments are made. The zero setting on the output meter may now be made by means of Pot.2 in the cathode follower line. A cathode ray oscilloscope connected to binding post #1 shows the output of the first three stages with no feedback. A small signal may be passed through the amplifier by adjustment of the balancing out potentiometer. The frequency of the oscillator may now be tuned to the natural frequency of the reed by adjusting for maximum amplitude of the sine wave showing on the scope. The gain may now be turned up and the amplifier is ready for operation. The output may be monitored with a C.R.O. connected to the output binding posts. The zero may be adjusted to any convenient position on the output meter scale with Pot.3 of the balancing out circuit.

Performance

The performance of the circuit will be discussed under the following subsections:

1. Zero Line Stability
2. Response
3. Range

Zero Line Stability

It may be seen from figure 9, page 20, that the drift amounts to approximately 1 millivolt per hour. The record shown in this figure was made with no input to the amplifier. The instrument had been in operation for twelve hours so that it may be taken as a fairly accurate measurement of the drift factor. This compares favourably with other D.C. Feedback Amplifiers in use here at the present time which have a drift of the same order when operating at optimum efficiency. This result, however, falls far short of the 0.2 millivolt drift in twenty-four hours recorded with the Chicago circuit. The discrepancy is probably due to the comparative degrees of refinement used in the two electrometers. For ordinary applications, as with the mass spectrometer, it is not felt that the amount of drift we obtained is serious.

Zero line fluctuations indicated on the same record appear to be less than one-tenth of a millivolt. With fluctuation of this order of magnitude a signal of 10 millivolts may be read to 1% accuracy or better. With a 10^{11} ohm input resistance this allows a 10^{-13} ampere signal to be measured to the same accuracy. The output of the amplifier has an appreciable alternating component since little filtering of the rectified alternating signal is used. If greater sensitivity were desired the output of the amplifier may be filtered before application to the recording instrument. This will remove some of the 450 cycle component and any short term irregularities present in the output.

Response

It was considered desirable to study the response of the amplifier to various-sized signals under conditions similar to those experienced with an ion current signal from the mass spectrometer. A small auxiliary circuit employing a 954 pentode has been used for this purpose. The plate of the 954

is connected directly to the input of the amplifier. The screen grid is connected to the variable tap of a potentiometer. The two ends of the potentiometer are maintained one at 3 volts positive and the other at 1.5 volts negative. The filament is battery heated with two 1.5 volt dry cells. All other circuit elements are grounded. With 1.5 volts negative on the screen grid there is no input signal. When the screen grid voltage becomes positive, however, sufficient electrons reach the plate to constitute a plate current which acts as an input signal. Signals up to 40 volts have been developed across the 10^{11} ohm input resistance using this method. Figure 10, page 21, shows the pen recording of various sized output signals from the electrometer-amplifier. The motor of the Brown Recorder used for these readings drives the pen the width of the chart in four seconds. The time of response, measured from peak to zero line, is seen to be less than ten seconds for signals within the 100 millivolt range. A one volt signal and two ten volt signals are shown on this same page. Signals of this magnitude require up to thirty seconds to fall from peak to zero. Ordinarily we would consider a time lag of this magnitude to be undesirable but when one considers that the one volt signal falls to 0.1% of its final value within four seconds and the ten volt signal to 0.05% of its final zero value within this same time we feel that this lag factor is not unduly serious.

Range

The lower limit of the instrument has already been discussed with reference to drift and to zero line fluctuations, that is a signal of the order of 10 millivolts may be read to 1% accuracy or better. This corresponds to an input current of 10^{-13} amperes. With a mass spectrometer the maximum ion current ordinarily measured is of the order of 3×10^{-10} amperes which gives an R.I drop of 30 volts across the input resistance. This electrometer-amplifier will handle signals up to 40 volts but overloads with greater input.

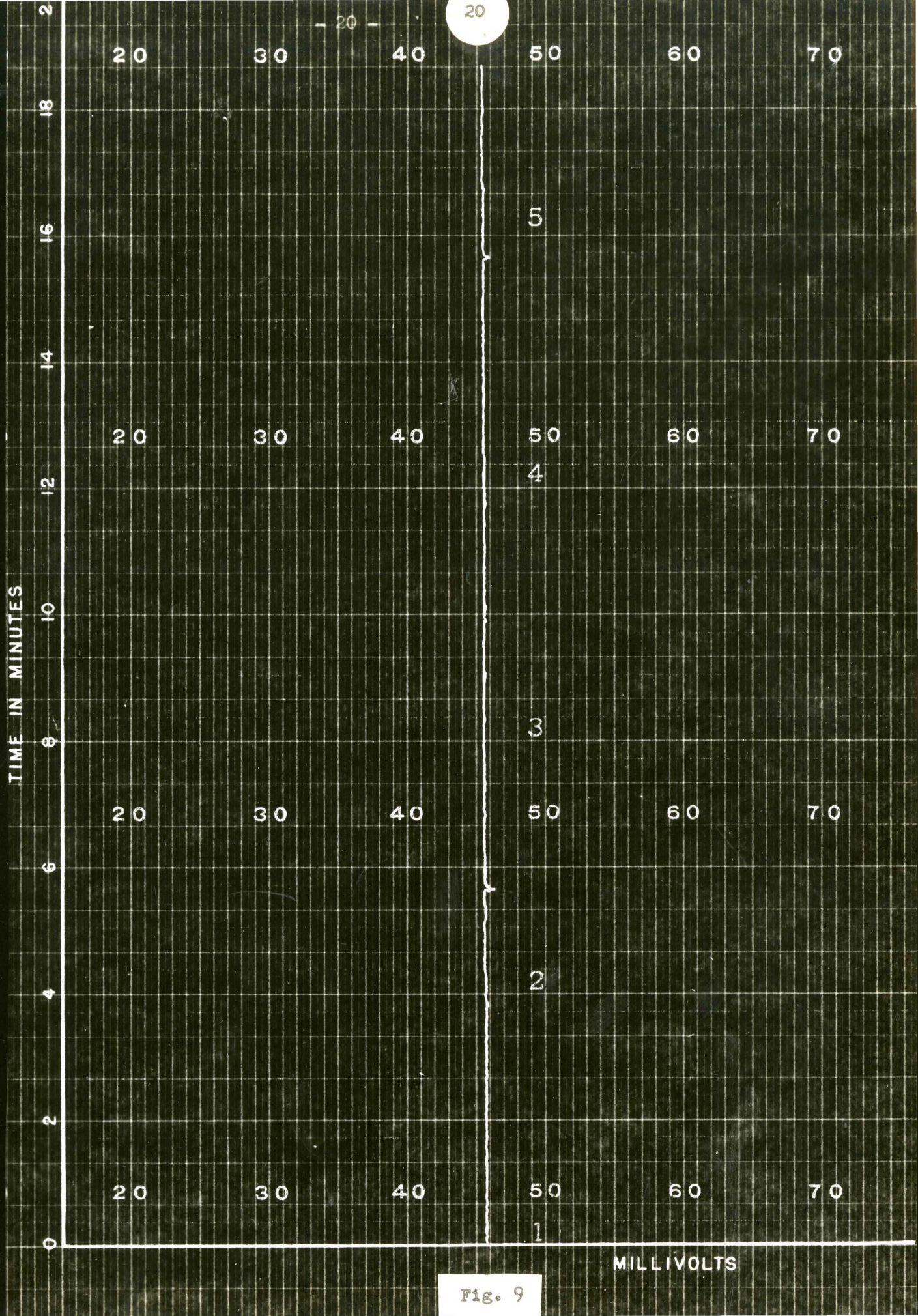
20 30 40 50 60 70
5
4
3
2
1
TIME IN MINUTES
0 2 4 6 8 10 12 14 16 18 2
MILLIVOLTS

Fig. 9

Fig.10

Fig. 10

DISCUSSION

Experimental work on this electrometer-amplifier has been aimed at the development of an instrument which would extend the sensitivity available for direct current amplification by a factor of five or ten. The discussions of the preceding pages show that the overall performance of this vibrating reed amplifier, using a 10^{11} ohm input resistor, has certainly equalled that of the conventional type D.C. Feedback Amplifier. Greater sensitivity, however, has not yet been attained. When a 10^{12} ohm input resistance is used the drift is slightly greater, zero line fluctuations amount to approximately 3 millivolts and the time factor is increased proportionately and this combination of factors gives unsatisfactory performance. Further experimentations and refinements may prove successful and these combined with input resistances of greater value than 10^{11} ohms may increase the present sensitivity, perhaps to the desired range.

The circuit and theory employed with the vibrating reed has certain practical advantages over the conventional type. Individual tube performance here is not nearly so critical, this being especially true of the 954 pentode in the first stage. In the standard type of feedback amplifier this tube is used as an electrometer and the heater current is adjusted to a "balance point" at which the plate current is independent of heater current variations over a small range. Considerable difficulty has been encountered in the selection of 954's which will attain this balance point. The only restriction placed on the 954 by the A.C. operated amplifier is that it have a low noise level. This simplifies considerably the selection of a suitable 954 to follow the vibrating reed. This is true to a lesser extent of all other tubes in the amplifier circuit. Less trouble should be encountered from thermal noise

developed across any resistor. These factors should make this electrometer-amplifier easier to service than the ordinary feedback amplifier. This should justify in part the additional complexity of the circuit.

Work aimed at improving the performance of this amplifier is being continued. With the present circuit a small alternating signal originating in the phased rectifiers appears in the feedback line and is applied to the input grid. It seems to be due to electrostatic unbalance between the two transformers feeding the grids of T_6 and must be eliminated. The time lag in the circuit could be greatly reduced if the feedback could be successfully applied to the lower side of the vibrating condenser with the lower end of the 10^{11} input resistance grounded. In this case the upper end of the resistor and the input leads would always be at some voltage approximately equal to the feedback voltage. The capacitance existing between these leads and the ground of the brass case could be degenerated by shielding these leads and the reed assembly and applying the feedback to this shield also. The case would remain at ground potential. These modifications would have the effect of decreasing still more the time lag of the circuit. With this type of shielding no capacitative limit would be placed on the length of the input leads.

The satisfactory application of these suggestions should produce an instrument with improved response having a more satisfying zero signal output. If this is completed a larger input resistance may be employed giving the desired increase in sensitivity.

BIBLIOGRAPHY

1. E. A. Johnson, Physics 7, 130-132 (1936)
2. S. A. Scherbatosky and R. E. Fearon, Physical Review 70, 96 (1946)
3. Chicago Report - M - CP - 2141.

PARTS LIST

Bat.- 4.5 Volt Dry Cell

C_1 - 50 mmf. max. variable

C_2 - 100 mmf.

C_3 - .005 mf.

C_4 - 30 mf. 450 v.

C_5 - 20 mf. 450v.

C_6 - .007 mf.

C_7 - 50 mf. 25v.

C_8 - 50 mf. 25v.

C_9 - .0006 mf.

C_{10}- 20 mf. 450v.

C_{11}- 30 mf. 450v.

C_{12}- 0.1 mf.

C_{13}- 0.5 mf.

C_{14}- 16 mf. 600v.

C_{15}- 8 mf. 600 v.

C_{16}- .02 mf.

C_{17}- 30 mf. 450v.

C_{18}- 30 mf. 450v.

C_{19}- 8 mf. 600v.

C_{20}- 8 mf. 600v.

C_{21}- 8 mf. 600v.

C_{22}- 8 mf. 425v.

C_{23}- 8 mf. 425v.

C_{24}- 40 mf. 250v.

C_{25}- .015 mf.

C_{26}- .009 mf.

C_{27}- .01 mf.

C_{28}- .04 mf.

C_{29}- .03 mf.

C_{30}- 25 mf. 50v.

C_{31}- 25 mf. 50v.

C_{32}- .04 mf.

C_{33}- .5 mf. 600v.

F_1 - 3 ampere fuse

L_1 - 10- 200X Hammond Choke

L_2 - 30-65X Hammond Choke

L_3 - 30-65X Hammond Choke

L_4 - Primary # 369 Hammond transformer

Pot.$_1$- 500 K ohm variable

Pot.$_2$- 10K ohm helipot.

Pot.$_3$- 1000 ohm helipot.

Pot.$_4$- 25 K w.w. potentiometer

Pot.$_5$- 1 megohm potentiometer

R_1 - 10^{11} ohm Victoreen resistance

R_2 - 10^9 ohm Victoreen resistance

R_3 - 10 K ohm

R_4 - 2 megohms

R_5 - 3000 ohm

R_6 - 1 megohm

R_7 - 3000 ohm

R_8 - 300 ohm

R_9 - 200 K ohm

R_{10}- 500 K ohm

R_{12}- 50 K ohm

R_{13}- 100 K ohm

R_{14}- 50 K ohm

R_{15}- 100 K ohm

R_{16}- 750 ohm

R_{17}- 250 K ohm

R_{18}- 250 K ohm

R_{19}- 250 K ohm

R_{20}- 250 K ohm

R_{21}- 30 K ohm

R_{22}- 50 ohm

R_{23}- 50 ohm

R_{24}- 100 ohm

R_{25}- 100 ohm

R_{26}- 30 K ohm

R_{27}- 100 K ohm

R_{28}- 1000 ohm

R_{29}- 1000 ohm

R_{30}- 1000 ohm

R_{31}- 30 K ohm

R_{32}- 10 K ohm

R_{33}- 150 K ohm

R_{34}- 1000 ohm

R_{35}- 30 K ohm

R_{36}- 100 K ohm

R_{37}- 5000 ohm

R_{38}- 5000 ohm

R_{39}- 150 ohm

R_{40}- 750 ohm

R_{41}- 1000 ohm

R_{42}- 2000 ohm

R_{43}- 1000 ohm precision

R_{44}- 3000 ohm variable helipot

R_{45}- 5 megohms

R_{46}- 250 K ohm

R_{47}- 300 ohm

R_{48}- 25 K ohm variable

R_{50}- 50 K ohm w.w. variable

R_{51}- 600 ohm

S_1 - S.P.S.T.

S_2 - D.P.S.T.

T_1 - 954

T_2 - 12SF5

T_3 - 12SF5

T_4 - 6V6

T_5 - 12SC7

T_6 - 12SC7

T_7 - 12SC7

T_8 - 12J5

T_9 - 5U4G

T_{10}- 6B4G

T_{11}- 6B4G

T_{12}- 6B4G

T_{13}- 12SH7

T_{14}- VR 105

T_{15}- IV

T_{16}- VR 105

T_{17}- 5Y3G

T_{18}- VR 150

T_{19}- VR 75

T_{20}- 12J5

T_{21}- 6V6

T_{22}- 6V6

Tr_1- Hammond # 448

Tr_2- Special Hammond Transformer # 20539
Primary 115 volts 25 cycle
Secondary 400-0-400 volts at 200 m.a. D.C.
Secondary 5 volts 3 amperes
Secondary 6.3 volts 4 amperes C.T.
Sedondary 6.3 volts 2 amperes C.T.

Tr_3- Hammond transformer # 269

Tr_4- Hammond transformer # 272

Tr_5- Universal Output Transformer

Tr_6- Four Universal output transformers connected in parallel.