DESIGN OPTIMIZATION

OF

VERTICAL WATER WHEEL GENERATOR

LOWER BRACKETS

DESIGN OPTIMIZATION
OF
VERTICAL WATER WHEEL GENERATOR
LOWER BRACKETS

By

DAVID LESLIE SAXTON, B.A.Sc.

A Thesis
Submitted to the Faculty of Graduate Studies
in Partial Fulfilment of the Requirements
for the Degree
Master of Engineering
McMaster University
May, 1968

MASTER OF ENGINEERING (1968)
(Mechanical)

McMASTER UNIVERSITY
Hamilton, Ontario

TITLE: Design Optimization of Vertical Water Wheel Generator Lower Brackets

AUTHOR: David Leslie Saxton, B.A.Sc. (U.B.C.)

SUPERVISOR: Professor J. N. Siddall

NUMBER OF PAGES: xiv, 217

SCOPE AND CONTENTS:

In this thesis the functions, method of structural analysis, and design limits of lower brackets are described. The results of an investigation of the design formulae, the development of a method of optimizing the design, and the results of an experimental check on the accuracy of the design formulae are presented.

The maximum stresses as determined by experiment were in good agreement with the theoretical predictions, however, the stresses measured at other locations and the deflection were not. The optimizing technique used was successful in reducing the value of the optimization function from an initial starting point and produced consistent results with different starting points.

ACKNOWLEDGEMENTS

The author wishes to express his appreciation for the assistance given him by many people during the investigation and preparation of this report. He thanks particularly Professor J. N. Siddall for his advice and guidance, Mr. L. C. Galloway of Canadian Westinghouse Co. Ltd., Hamilton, Ontario, for his information and help in formulating the problem, and Dr. G. Kardos, for his assistance during Professor Siddall's abscence. In addition, the author wishes to thank Mr. W. Raynor, of Canadian Westinghouse Co. Ltd., who made the undertaking of this project possible, and Mrs. A. Woodrow, for her typing of the thesis.

This project was supported by Canadian Westinghouse Co. Ltd. and by a grant from the Ford Foundation to McMaster University.

TABLE OF CONTENTS

CHAPTER PAGE

LIST OF ILLUSTRATIONS

LIST OF TABLES

LIST OF APPENDIX

NOMENCLATURE

SYMBOL	DESCRIPTION
UPPER CASE	
A2MAX	Maximum slope of lower flange of arm
B	Vertical distance from centreline of hub to guide bearing
B_1	Bending rigidity of ring
B(J)	Limiting values of constraining equations
C	Torsional rigidity of ring
C_i	Altered form of constraining equations
E	Modulus of Elasticity
F_1	Radial load applied to ring
FS	Factor of safety (normal)
FSC	Short circuit force
FSE	Factor of safety (emergency)
G	Shear Modulus
H	Vertical distance between arm flanges
HI	Vertical distance from soleplate to guide bearing
I	Area moment of inertia of arm section
I_o	Area moment of inertia of arm section at x=L
L	Length of arm
M	Bending moment in arm
N	Number of arms
$\overline{N}$	Normalized $\overline{NSD}$ vector
N_{cr}	Bracket critical frequency

SYMBOL	DESCRIPTION
UPPER CASE	
$\overline{NSD}$	New successful direction vector for Multiple-Gradient Summation Technique
P	Vertical reaction at arm tip
P_{cr}	Critical buckling load for compression ring
PHI(J)	Constraining equation
Q	Moment of area about neutral axis
RH	Horizontal radial reaction at arm tip under emergency conditions
RV	Vertical reaction at arm tip under emergency conditions
S_j	Slack variable in linear programming technique
SPAN	Distance over support points
SY	Yield strength of material
TL	Lower ring thickness
TF	Flange thickness
TU	Upper ring thickness
TW	Web thickness
U	Value of optimization function
U^1	Value of optimization function in linear programming method
V	Shear load in arm
W	Weight of rotating components of generator
WID	Width of beam flange
WT	Bracket weight

SYMBOL	DESCRIPTION
UPPER CASE	
X_i	Design variables in linear programming method
Z(J)	Design variables
LOWER CASE	
a	Term in arm formulae
b	Term in arm formulae
b_j	Limiting values of constraining equations
b_t	Solid beam thickness
h	Web height
h_o	Web height at x = 0
ℓ	Beam length
r	Radius to centroid of ring section
r_i	Inside radius of ring
r_o	Outside radius of ring
t	Ring thickness
t_f	Flange thickness
t_w	Web thickness
u	Vertical depth of tapered flange
w	Flange width
x	Coordinate along length of beam
xx	Distance from support point to thrust bearing

SYMBOL	DESCRIPTION
LOWER CASE	
y	Vertical coordinate from neutral axis of box beam
y_1	Vertical coordinate from neutral axis of solid beam
GREEK SYMBOLS	
α	Half-angle between radial loads on a ring
α_1	Slope of upper flange of arm
α_2	Slope of lower flange of arm
α_3	Slope of centreline of hub under emergency conditions
δ_ℓ	Radial deflection of lower ring
δ_s	Static deflection of bracket
δ_t	Total deflection of bracket
δ_u	Radial deflection of upper ring
δ_v	Vertical deflection of bracket due to rotation of hub
δX_i	Change in variable X_i in linear programming method
δX_i^+	Positive part of δX_i
δX_i^-	Negative part of δX_i
ΔX_i	Change in variable X_i in direct search method
π	3.1416
ϕ_j	Constraining equations

GREEK SYMBOLS	DESCRIPTION
σ_b	Bending stress in arm
σ_{max}	Maximum stress in tapered flange
ζ_{xy}	Horizontal shear stress in arm

I. INTRODUCTION

A lower bracket is a welded steel structure used to support and locate the rotating components of vertical water wheel generators. The location of the bracket in a generator can be seen in Figure 1. Typically, brackets consist of two hub rings and three or more beams, called arms. Figures 2 and 3 illustrate four-armed brackets. The hub rings generally fall into the class of "thick" rings, that is, those with large ratios of outside diameter to inside diameter.

The loading on and structural analysis of lower brackets will be presented in detail in Chapter 2.

This project consisted of three major parts:

(1) An investigation of the stresses and deflections in thick rings and in the arms. The validity of using ordinary beam formulae for predicting the stresses and deflections of the arms is in doubt because of the large depth to length ratio of the arms. In addition, the arms are often tapered and the effect of this taper is not taken into account.

(2) Optimization of the design of the bracket utilizing the results of the preceding investigation with minimum bracket weight as the optimization criterion, to demonstrate the applicability of optimization

techniques to industrial design problems.

(3) Building and testing a model to determine the accuracy of the stress and deflection equations.

2. LOADING, STRUCTURAL ANALYSIS, AND DESIGN OF LOWER BRACKETS

2.1 DESCRIPTION

As mentioned in the introduction, lower brackets generally consists of two hub rings and three or more arms. The arms are usually box sections or I-beams. The flanges butt onto the rings and the webs are extended between the rings to prevent relative motion of the rings in the vertical direction, thus forming a rigid structure, as illustrated in Figure 4.

The bracket supports the thrust and guide bearings, which are normally spigoted and bolted to the top ring of the bracket, as illustrated in Figure 5, or to the middle ring of the bracket illustrated in Figure 6.

In this report the structural effects of the middle ring illustrated in Figure 6 are neglected.

2.2 LOADING

The bracket functions under two kinds of loading, one being vertical, due to the weight of the rotating parts and the thrust on the hydraulic turbine, applied to the thrust bearing, and the other being horizontal, due to unbalance in the machine, and, in some cases, electrical faults, applied to the guide bearing.

Bracket analysis is generally divided into two parts:

(a) loading under normal operating conditions, and

(b) loading under emergency conditions.

Normal loading, as implied by the name, is the loading which occurs when the machine is operating at rated load, and consists of the weight of the rotating parts plus the hydraulic thrust. Lateral loading on the guide bearing due to machine unbalance is generally quite small and is therefore ignored.

Loading under emergency conditions consists of loading under normal conditions plus a lateral thrust on the guide bearing due to a magnetic force. The magnitude of the magnetic force is calculated as if half of the field poles were instantaneously shorted out, resulting in an unbalanced magnetic pull rotating at the speed of the machine.

The magnitudes of the normal and emergency forces are quite large, both being in the order of one million pounds or more.

2.3 STRUCTURAL ANALYSIS

2.3.1 NORMAL CONDITIONS

Analysis of a bracket under normal conditions generally proceeds inwards from the tips of the arms. The applied load W, consisting of the rotating weight and the hydraulic thrust, is transmitted from the runner to the bearing. Since the bearing is rigid relative to a ring loaded at right angles to its plane, the applied load is picked up at the webs and is not uniformly distributed around the ring.

The load applied to the webs of each arm, then, is equal to:

$$\frac{W}{N},$$

and the reaction applied to the tip of the arm is:

$$P = \frac{W + WT}{N}.$$

This tip reaction causes a bending moment and shear load in the arm, and from these, the bending and shear stresses are calculated using ordinary beam formulae. This loading is illustrated in Figure 7.

In many cases the arm is tapered with either the upper or lower flange being horizontal and the other sloped. In some cases, both are sloped so that the arm becomes deeper at the hub, and in even rarer cases, both may be sloped in the same direction to give a rising or falling arm.

The bending and shear deflections of the arm are calculated by approximating the beam with several straight sections.

The arm tip reaction causes a moment to be applied about the point of application of the load on the upper ring. This bending moment is resisted by the rings, the upper ring being loaded in compression and the lower in tension. The net effect of this loading is equivalent to that of applying radial loads to the rings, as illustrated in Figure 8. The magnitude of the radial force in Figure 8 is:

$$F_1 = \frac{P.xx}{H + \frac{1}{2}(TU + TL)}$$

The rings, which generally have an outside diameter to inside diameter ratio of 2, are analyzed as if the loads acting on them were point loads. Their stresses and deflections are calculated from the formulae given in Appendix A.

The vertical deflection of the bracket due to the radial motion of the rings is calculated as follows:

> If the radial deflection of the upper ring under load F_1 is δ_u, and if the radial deflection of the lower ring outwards under load F_1 is δ_ℓ, then the rings move relative to one another an amount $\delta_u + \delta_\ell$, but since the rings are rigidly joined, this relative motion can only occur through rotation of the hub, and for the hub to rotate it must deflect vertically, as illustrated in Figure 9.
>
> The deflection of the bracket due to the rotation of the hub is:

$$\delta_v = \frac{(\delta_u + \delta_\ell) \cdot xx}{H + \frac{1}{2}(TU + TL)}$$

This deflection plus those of the arm in bending and shear are added to obtain a total deflection of the bracket, δ_t.

The natural frequency of the bracket is calculated as follows:

The static deflection of the bracket under the weight of the rotating parts is:

$$\delta_s = \frac{(W + WT - \text{Hydraulic Thrust})}{W + WT} \cdot \delta_t$$

The bracket natural frequency N_{cr} is:

$$N_{cr} = 187.7\sqrt{\frac{1}{\delta_s}}$$

2.3.2 EMERGENCY CONDITIONS

As mentioned in Section 2.2, loading under emergency conditions consists of the loading under normal conditions plus the loading due to the short circuit force applied at the generator guide bearing. This loading is illustrated in plan in Figure 10 and in section in Figure 11.

The loads on individual bearing shoes are assumed to vary as the square of the cosine of the angle between the shoe and the line of action of the short circuit force. These, however, are not of concern when designing those parts of the bracket considered in this thesis. In bracket design it is assumed that the worst loading condition from both the stress and lateral deflection viewpoints occurs when FSC is directly in line with one of the arms, as illustrated in Figure 12. Furthermore, it is assumed that each of the arms directly in line with FSC takes 50 percent of the load, one arm being in compression and the other in tension. Thus, in Figure 11, the vertical and horizontal reactions are:

$$RV = \frac{FSC \,.\, HI}{SPAN} \qquad RH = \frac{FSC}{2}$$

This analysis is based on the premise that the hub is rigid.

Under short circuit loading, the bracket arms bend, resulting in a lateral deflection of the guide bearing, as shown by the dotted lines in Figure 11. The lateral deflection of the guide bearing is thus $\alpha_3.B$ plus local deflections such as the compressive deflection of the guide bearing adjusting screws.

The stresses in the arms, calculated using ordinary beam formulae, are added to those for the normal loading condition. The loads and stresses in the rings caused by the short circuit force are calculated as if the tip reactions to the short circuit force, RV, were in the same direction and occurred on all arms.

The preceeding material is illustrated with a four arm bracket, the type most commonly used by Canadian Westinghouse Company. However, the design formulae apply directly to structures having any number of arms. For analysis under short circuit conditions the vertical reactions at the arm tips are calculated with the assumptions that the hub is rigid and the resisting force at the tip of each varies as the cosine of its angle from the line of action of FSC.

In general, the torsional stiffness of the arms at right angles to the line of action of FSC is ignored.

During machine start-up, the breakaway coefficient of friction between the thrust bearing shoes and the runner can be as high as 0.35, the result being a torque exerted on the bracket and bending of the arms about their weaker axes. The stresses caused by this bending are not always checked.

2.4 DESIGN LIMITS

The design requirements for a lower bracket may be stated briefly as follows:

1. The tensile stresses should not exceed one-third the yield strength of the material under normal conditions, and the shear stresses should not exceed one-six the yield strength.
2. The tensile and shear stresses in the material should not exceed two-thirds and one-third the yield strength, respectively, under emergency conditions.

3. The maximum deflection of the bracket under normal loading should be 0.10 inches or less.
4. The natural frequency of the bracket, under the action of the weight of the rotating parts, should be greater than 1.25 times the runaway speed of the machine.
5. Under emergency conditions the rotor should not touch the stator.
6. In many cases, the bracket cross-section must fit within a given profile limit.

3. DESIGN INVESTIGATION

3.1 RINGS

A literature search for information on the stresses and deflection of radially loaded thick rings was carried out. Several papers of interest were found, particularly those of Blake [1], Srinath and Acharya [2], and Acharya, Srinath and Lakshiminarayana [3], and Leeman [4].

Briefly, Blake's paper states that the radial deflections of a diametrally loaded ring are less than those predicted by strain energy calculations, both at the points of application of the loads and at 90° to the direction of application. If this work can be extrapolated to cases of more then two loads one would expect the deflection of a bracket to be less than that predicted by the existing design formulae.

The remaining papers found deal with stresses, the general concensus being that the predicted stresses at large angles to the line of application of the forces agree with those obtained experimentally by photoelastic methods, at least to an extent which makes their use as design formulae feasible.

An analysis of the Canadian Westinghouse Company design formulae for rings indicates that they were developed from strain energy methods using curved beam theory, similar to those used by Srinath and Acharya [2] in developing the bending stress equation for a ring loaded in diametral compression.

Since the investigation of the subject of thick rings did not seem to offer any reliable improvement in terms of either stress or deflection the topic was not pursued further.

3.2 ARMS

3.2.1 SHORT BEAMS

Conway, Chow and Morgan [5] have determined the stress distribution in a square plate shown in Figure 13, using both strain energy and finite difference methods. They have also examined a rectangular plate having a depth to length ratio of 1/2. The results of their investigation are given in Figures 14, 15 and 16, which show the variation in bending stress across different sections. They also found that the shear stress across a section in such beams was much different from that predicted by the ordinary beam formula. In fact, it was much lower halfway between the top and bottom and much higher at the top and bottom.

The authors came to the conclusion that simple beam theory is an accurate predictor of the bending stresses in beams with depth to length ratios less than 1/2, and report that photoelastic methods confirmed, in general, their results.

Although the arms used in brackets are not only webs, but have flanges as well, one would expect the results of the work of Conway, Chow and Morgan, applied to a flanged beam, to give similar results. Since the arms in brackets are cantilevers, they fall into the class of beams having depth to length ratios less than 1/2, and, since the loads are not applied over the whole length of the arm, one would expect reasonable agreement between the acutal bending stresses at the hub and those predicted from simple beam theory.

3.2.2 ARM STRESSES

As mentioned in the Introduction, the effects of taper on the stresses in the arms are not considered. Seely and Smith [6] state that the bending stress on a plane at right angles to the centreline of a tapered beam can be predicted with sufficient accuracy from the formula:

$$\sigma_b = \frac{My}{I}$$

Timoshenko [7] concurs with this. However, in the case of a tapered beam the plane at right angles to the centreline of the beam is not a principal plane, and, in fact, the principal plane at the flange is at right angles to the flange. The maximum stress on this plane is:

$$\sigma_{max} = \frac{\sigma_b}{\cos^2 \alpha_1}$$

where α_1 is the angle between flange and the section on which σ_b is calculated. This formula is derived by Seely and Smith [6].

For the case of a beam which has different slopes on its upper and lower flanges the maximum stresses on the upper and lower flanges will be different.

Timoshenko [7], predicts the horizontal shear stress in the beam illustrated in Figure 17 as being:

$$\zeta_{xy} = \frac{3M}{b_t h^2} \frac{dh}{dx} + \frac{6}{b_t} \left(\frac{h^2}{4} - y_1^2\right) \frac{d}{dx} \left(\frac{M}{h^3}\right)$$

If $h_{x = L} = 2h_o$, then at the built-in and at the cantilever:

$$\zeta_{xy} = \frac{3}{8} \frac{P}{b_t h_o} \left(1 + \frac{y_1^2}{h_o^2}\right)$$

and the shear stress distribution across the section is as shown in Figure 18.

Since most of the arms on lower brackets are tapered a similar formula based on Timoshanko's analysis was developed by the author for box beams. The derivation of this formula is given in Appendix B. For the tapered box beam illustrated in Figure 19, the horizontal shear in the webs of the beam is:

$$\zeta_{xy} = \frac{P}{2} \left(\frac{x}{I}\right) \frac{dh}{dx} \left\{\frac{h}{2} + \frac{u.w}{2t_w}\right\} + \frac{P}{2} \frac{d'}{dx}\left(\frac{x}{I}\right) \left\{\frac{h^2}{4} - y^2 + \frac{u.w}{2t_w} [h + u]\right\}$$

For the above, the taper of the flange is given as a slope rather than an angle, hence:

$$u = t_f \cdot \sqrt{1 + \alpha_1^2}$$

To obtain the horizontal shear in the flanges the preceding equation is multiplied by $2t_w/w$.

A comparison between the horizontal shear stresses predicted by the simple beam theory and by the new formula is given in Appendix C.

3.2.3 ARM DEFLECTIONS

It was felt that the existing technique used by Canadian Westinghouse Company for calculating the bending and shear deflections of tapered box beams introduced a large error into the total bracket deflection. Accordingly, three new formulae were developed which give closed solutions for the deflections. For the tapered box beam shown in Figure 19 these are:

(a) Deflection due to Bending:

$$\delta_b = \frac{P}{EI_o}\left[\frac{\ell}{(a-b)(1+a\ell)} + \frac{1}{(b-a)^2}\left\{\frac{1}{b}\ln(1+b\ell) + \frac{b-2a}{a^2}\ln(1+a\ell)\right\}\right]$$

where I_o = moment of inertia at $x = o$

$$a = \frac{\alpha_1 + \alpha_2}{h_o + t_f}$$

$$b = \frac{t_w(\alpha_1 + \alpha_2)}{t_w(h_o+t_f)+3(w-t_w)t_f}$$

(b) Deflection due to Shear Using $\zeta_{xy} = VQ/IT$

$$\delta_s = \frac{P(h_o+t_f)}{4I_o t_w G} \left[\frac{t_w(h_o+t_f)\ln\{1+b\ell\}}{2b} - \frac{t_w t_f^2 a\ell}{2(h_o+t_f)(b-a)(1+a\ell)}\right.$$

$$\left. + \frac{1}{b-a} \ln\{\frac{1+b\ell}{1+a\ell}\}(w.t_f - t_w.t_f + [\frac{b}{b-a}] \frac{t_w . t_f^2}{2(h_o + t_f)})\right]$$

(c) Deflection due to Shear from New Formula

$$\delta_s = \frac{P}{2GI_o} \left(\frac{\ell}{\{1+a\ell\}^2\{1+b\ell\}}\right)\left[\left\{\frac{h_o + (\alpha_1+\alpha_2)\ell}{2}\right\}^2 + \frac{u.w}{2t_w} \{h_o+(\alpha_1+\alpha_2)\ell+u\}\right]$$

The derivations of these three formulae are given in Appendix B, and are based on an approximation to the moment of inertia which is in error from the exact value at any section by less than one percent.

Comparisons between deflections predicted by approximating arms with a series of straight sections and the new formulae are given in Appendix D. Note that the deflections due to bending and shear obtained by integrating the approximated moment of inertia in the simple beam formulae are singular at $\alpha_1 + \alpha_2 = 0$.

4. DESIGN OPTIMIZATION

4.1 FORMULATION OF PROBLEM

The weight of the bracket is a function of ten variables and several constants. The ten variables are:

Z(1) = OD ..... outside diameter of rings [in]
Z(2) = TU ..... thickness of upper ring [in]
Z(3) = TL ..... thickness of lower ring [in]
Z(4) = IT ..... distance between rings [in]
Z(5) = TF ..... thickness of arm flange [in]
Z(6) = TW ..... thickness of arm web [in]
Z(7) = IDL .... internal diameter of lower ring [in]
Z(8) = WID .... width of arm flange [in]
Z(9) = ALPHA1.. slope of upper flange relative to horizontal
Z(10)= ALPHA2.. slope of lower flange relative to horizontal

The slopes of the flanges are positive when they make the arm depth less at the tip than at the hub, as illustrated in Figure 18.

There are 42 limits and limiting equations on the design, of which 20 are nonlinear and 22 are linear. Of the 22 linear limits 20 are the lower and upper limits on the sizes of the variables. These limit equations and limits are described below, the PHI's being the limit equations and the B's the limiting values of the PHI's.

PHI(1)	bracket deflection at the bearing
PHI(2)	bracket critical frequency
PHI(3)	radial load applied to upper ring minus one-third of the critical buckling load for the upper ring
PHI(4)	upper ring thickness minus lower ring thickness minus 1 inch
PHI(5)	slope of upper flange plus slope of lower flange
PHI(6)	maximum upper ring bore stress between loads
PHI(7)	maximum upper ring bore stress under load
PHI(8)	maximum lower ring bore stress between loads
PHI(9)	maximum lower ring bore stress under load
PHI(10)	maximum horizontal shear stress at arm tip during normal conditions
PHI(11)	maximum horizontal shear stress at arm tip during emergency conditions
PHI(12)	maximum horizontal shear stress in arm at hub during normal conditions
PHI(13)	maximum horizontal shear stress in arm at hub during emergency conditions
PHI(14)	maximum horizontal shear stress in arm minus limit from CSA S16-1961 (Clause 12.5)
PHI(15)	maximum bending stress in arm during normal conditions
PHI(16)	maximum stress in compression flange during emergency conditions
PHI(17)	maximum stress in tension flange during emergency conditions
PHI(18)	PHI(16) minus whichever is greater of CSA S16-1961 (Clause 12.4.1) or maximum allowable stress in compression flanges to limit local buckling

PHI(19)	maximum depth of arm at support	
PHI(20)	maximum elevation of upper ring, measured from support	
PHI(21)	minimum elevation of upper ring	
PHI(22)	difference in elevation between upper ring and bracket profile limit (see Figure 20)	
PHI(23)	Z(1)	
⋮		
PHI(32)	Z(10)	
PHI(33)	Z(1)	
⋮		
PHI(42)	Z(10)	
B(1)	0.100	[inches]
B(2)	N_{cr}	[c.p.m]
B(3)	0.	[lb.]
B(4)	0.	[inches]
B(5)	0.	
B(6)	SY/FS	[p.s.i]
B(7)	SY/FS	[p.s.i]
B(8)	SY/FS	[p.s.i]
B(9)	SY/FS	[p.s.i]
B(10)	SY/2FS	[p.s.i]

B(11) .... SY/2FSE [p.s.i]

B(12) .... SY/2FS [p.s.i]

B(13) .... SY/2FSE [p.s.i]

B(14) .... 0. [p.s.i]

B(15) .... SY/FS [p.s.i]

B(16) .... SY/FSE [p.s.i]

B(17) .... SY/FS [p.s.i]

B(18) .... 0. [p.s.i]

B(19) .... maximum allowable depth of arm at support [inches]

B(20) .... maximum allowable elevation of upper ring [inches]

B(21) .... minimum allowable elevation of upper ring [inches]

B(22) .... 0. [inches]

B(23) .... lower limit on variable size (dimensions are the same as those for variables)

⋮

B(32) .... lower limit on variable size

B(33) .... upper limit on variable size

⋮

B(42) .... upper limit on variable size

The bracket profile limits are combinations of limits on variable sizes and four other limits. In Figure 20, the line joining the maximum height of arm at the support and the maximum elevation of the upper ring at the maximum slope of the flange forms a profile limit for the upper half of the structure. The line joining the soleplate and the maximum outside diameter of the rings at a slope equal to A2MAX forms a limit profile for the lower half of the structure.

In the preceding, there are both equal to or less than constraints and equal to or greater than constraints. In order to make the constraints uniform the equal to or greater than constraints were converted by multiplying by minus one, i.e. if

$$PHI(J) \geq B(J),$$

then

$$-PHI(J) \leq - B(J).$$

The preceding limits do not include any on the lateral deflection of the bracket or the stresses in the rings during emergency conditions since a reliable and accurate method for calculating these was not available. The author [8] has developed a mathematical model based on combinations of springs in two to four planes to represent the various components of brackets. This model, with further development, could be used to predict the lateral deflections and ring stresses, however, it was felt that such work was beyond the scope of this thesis and unnecessary for the demonstration of the usefullness of optimization in design.

The object then, is to minimize the optimization function U, which is the weight of the bracket and is a function of the 10 variables, subject to the condition that none of the 42 limits are exceeded.

4.2 DIRECT SEARCH METHOD

Due to the complexity of the nonlinear limit equations it was felt that an optimizing technique based on iterative numerical calculations performed by a digital computer would be most desirable. The first technique to be tried was that of direct search [9,10].

The direct search algorithm operates in the following manner. Starting from an initial point, a variable X_i is increased (or decreased) an amount ΔX_i. The value of U is then calculated for this new value of X_i. If this produces a better value of U the same procedure is applied to the second variable, and so on. If it is unsuccessful, the value of X_i is changed from its initial value by an amount ΔX_i in the opposite direction and a new value of U calculated. If this is successful, the value of X_i is left at its new value and a similar procedure applied to X_{i+1}. If searches in both directions are unsuccessful, then the value of X_i is returned to its initial value and the procedure applied to X_{i+1}. This process is repeated until all variables have been tried, at which point a univariate search is complete.

If the univariate search is successful, then a pattern move is made and a new univariate search carried out. The pattern move is equal in magnitude to the result of the preceding pattern move plus the preceding univariate search. The value of U after the univariate search is compared to the value of U before the move, and, if this is successful, another pattern move is made. If not, the previous pattern move is cancelled and a univariate search made from the end of the previous search.

This process is repeated until a univariate search cannot find a better value of U, the process then being terminated or the step size reduced.

A direct search technique is illustrated in two dimensions in Figure 21.

This technique utilizes both sequential and simultaneous changes in the variables, the simultaneous changes or pattern moves being much faster than the sequential changes, or univariate searches, but less accurate.

This technqiue, in a modified form can be used with problems having constraints. In the modified algorithm, the values of the limit equations are checked after each search or move. If any limit is exceeded, the difference between the limit equation value and limit is multiplied by a large number, for example, 10^7, and this added to U, thus creating an artificially large value of U. This soon forces the optimization into a feasible region and also permits starting at an infeasible point.

A computer programme to apply the modified direct search algorithm was written for this problem. The direct search method was included in the main programme while the calculation of U and of the limit equations was put into a subroutine.

Since brackets are normally constructed from commerical steel plate, the step sizes or incremental change sizes for the variables were set at values corresponding approximately to those of commerical steel plate and not reduced.

The direct search computer programme is not included in this thesis since it forms part of a more extensive programme to be discussed later.

Initial results obtained from the direct search method produced designs in which the rings were very thin and had diameters very near that of the pit diameter. After several runs produced this result it became obvious that some limit on the outside diameter of the rings was required. It should be noted that an unlimited diameter design is not practical from the point of view of generator design since it would not permit access to the bearing from below and would also pose design, manufacturing, and shipment problems. From a strcutural point of view the behaviour of such a bracket could no longer be predicted from the equations for rings and arms. Also, it was felt that the compression ring would tend to buckle when it became thin.

As a result of this initial work a literature search was carried out in an attempt to find a suitable formula which would predict the magnitude of the radial loads which would cause the upper ring to buckle. None was found, consequently, the author derived the following formula:

$$P_{cr} = \frac{2\alpha}{r^2}\left[\frac{B_1}{r}\left(\frac{\pi}{2\alpha}\right)^2 + C\left(\sqrt{r_o} - \sqrt{r}\right)^2\right],$$

where:

P_{cr} = critical buckling load

α = one half the angle between loads

r = mean radius of ring

r_o = outside radius of ring

B_1 = bending rigidity of ring

C = torsional rigidity of ring.

The derivation of this formula and an explanation of the symbols used are included in Appendix E.

This formula, which forms part of PHI(3), apparently provided the necessary limit equation since, after its inclusion in the direct search programme, designs similar to actual designs were produced by the optimization.

After the direct search programme was fully developed runs were made for three different designs (sets of input data), each starting from three different points. The results are given in Appendix F. The results were not at all encouraging. Each starting point produced a different end result.

Examination of these results indicated that the direct search method was stalling on one or more constraints and was not reaching the optimum. This problem is illustrated in Figure 22, and is discussed by Klingman and Himmelblau [11]. Reducing the step size produced slightly better optima in each case, as did altering the ratios of the step sizes, however, the changes produced were not significant.

In order to overcome this difficulty, the direct search method was combined with each of two different optimizing methods, the Multiple-Gradient Summation Technique and the Method of Approximation Programming.

4.3 MULTIPLE-GRADIENT SUMMATION TECHNIQUE

The Multiple-Gradient Summation Technique, proposed by Klingman and Himmelblau [11], is an algorithm created to change the variables in a constrained nonlinear optimization problem in such a manner as to improve the optimization function after a direct search technique has become stalled on a constraint, as shown in Figure 22.

For this technique the limits for the constraining functions must be in the form

$$C_i\ (X_1, \ldots\ldots, X_n)\ \geq\ 0,$$

and U a maximum. When a constraint has been reached by the direct search method, a New Successful Direction ($\overline{NSD}$), along which a move is to be made, is defined as follows:

$$\overline{NSD} = \frac{\Sigma \text{Grad } C_i(X_1,\ldots X_n)}{|\Sigma \text{Grad } C_i(X_1,\ldots X_n)|} + \frac{\text{Grad } U(X_1,\ldots .X_n)}{|\text{Grad } U(X_1,\ldots .X_n)|}\ .$$

This, then, is the vector sum of the normalized gradients of the contacted constraints and the optimization function. This technique is illustrated in Figure 23. The $\overline{NSD}$ vector is then normalized to yield a unit vector:

$$\overline{N} = \frac{\overline{NSD}}{|\overline{NSD}|}\ ,$$

along which a move is to be made. Next, moves are made along

$\overline{N}$. If the same constraint is reached, the size of the move along $\overline{N}$ is reduced, or, if a different constraint is contacted, new values of $\overline{NSD}$ and $\overline{N}$ are calculated. If the amount of the move size is reduced to a limiting value specified by the programmer, the direct search step size is reduced and the optimization returned to the direct search method. If the direct search, at this stage, is unsuccessful, the Multiple-Gradient Summation Technique is applied again with an accelerating factor. If the direct search step sizes become less than a specified amount, the algorithm is terminated.

This technique was applied to the problem of bracket design optimization by altering the limit equations as follows:

$$C_i(X_1, \ldots . X_n) = PHI(I) - B(I) \leq 0$$

Since all the constraints were of the equal to or less than type, and the object to minimize the optimization function, the New Successful Direction took the form:

$$\overline{NSD} = -\frac{\Sigma \text{Grad } C_i}{|\Sigma \text{Grad } C_i|} - \frac{\text{Grad } U}{|\text{Grad } U|}$$

The gradients were evaluated numerically rather then analytically.

The application of this technique to the end results of the direct search method was only partly successful. While the optimization function was reduced, the amount of reduction achieved for long run times on the computer was not significant, hence work with this method was terminated.

Examination of the computer results suggests that the reason for the slowness of this technique is that the constraints are concave, as illustrated in Figure 24, in which case the algorithm would only change the variable slightly before hitting the same constraint. One would expect, for convex constraints, that the Multiple-Gradient Summation Technique would produce a $\overline{N}$ along which large moves could be made before hitting a different limit.

4.4 METHOD OF APPROXIMATION PROGRAMMING

4.4.1 DESCRIPTION OF METHOD

The Method of Approximation Programming (MAP), used by Griffith and Stewart [12] to solve oil refinery problems, essentially consists of linearizing the nonlinear optimization function and constraints followed by a linear programming solution of the linearized system. This cycle is applied repetitively in such way that the solution of the linear problem converges to the solution of the nonlinear problem.

Mathematically, the lower bracket optimization problem may be stated as follows;

Minimize: $U=f\ (X_1,\dots,X_n)$

Subject To: $\phi_j(X_1,\dots,X_n) \le b_j \qquad j = 1,m$

The ϕ's also include the upper and lower bounds on the sizes of the variables. At some point $X_i = X_i^o$ the nonlinear problem can be linearized by expanding U and the ϕ_j in Taylor series and ignoring terms of higher order than the first. The linearized problem then takes the form:

$$\text{Minimize:} \quad U = f(x_1^o,\ldots X_n^o) + \sum_{i=1}^{n} (X_i - X_i^o) \frac{\partial f(X_1^o,\ldots,X_n^o)}{\partial X_i}$$

$$\text{Subject To:} \; \phi_j(X_1^o,\ldots\ldots,X_n^o) + \sum_{i=1}^{n} (X_i - X_i^o) \frac{\partial \phi_j(X_1^o,\ldots\ldots,X_n^o)}{\partial X_i} \leq b_j$$

$$j = 1,m$$

This form is not yet suitable for a linear programming solution. If $X_i - X_i^o$ is denoted as δX_i, a requirement of the linear programming technique is that δX_i be positive. Another requirement is that all the limit equations be equality constraints. To meet the first requirement δX_i is defined as being:

$$\delta X_i = \delta X_i^+ - \delta X_i^-$$

This step effectively doubles the number of variables, however, in the linear programming solution either δX_i^+ or δX_i^- will be zero. The second requirement is met by adding slack variables S_j to the limit equations. Denoting the partial derivatives as constants; i.e.,

$$\frac{\partial f(X_i^o,\ldots,X_n^o)}{\partial X_i} = C_i,$$

and $$\frac{\partial\phi_j(X_i^o,\ldots.,X_n^o)}{\partial X_i} = a_{ji},$$

the linear programming problem takes the form:

$$\text{Minimize:}\quad U^1 = U-f(X_1^o,\ldots,X_n^o) = \sum_{i=1}^{n} C_i\delta X_i^+ - \sum_{i=1}^{n} C_i\delta X_i$$

$$\text{Subject To:}\quad \sum_{i=1}^{n} a_{ij}\delta X_i^+ - \sum_{i=1}^{n} a_{ij}\delta X_i^- + S_j = b_j-\phi_j(X_1^o,\ldots.,X_n^o)$$

$$j = 1,m$$

Starting with a nonlinear problem having 10 variables and 42 constraints, the development of a linear programming problem has resulted in a linear problem having 62 variables and 42 constraints.

In the MAP algorithm, the changes in the variables, that is, the δX_i, are limited to small ranges so as to make the linear approximations reasonably accurate.

Since the exact details of linear programming algorithm are well documented elsewhere, they will not be presented here.

4.4.2 APPLICATION TO PROBLEM

A modified version of MAP was applied to the lower bracket problem. Instead of limiting the δX_i to small changes in the variables the changes were allowed to be large, that is, in the order of plus or minum 10 percent of the variable size. The linear programming solution, in most cases, would violate one or more limits. If this occurred, the capacility of the direct search method to find a feasible solution was utilized. This is illustrated in Figure 25.

A computer programme for the modified version of MAP, discussed above, was added to that of the direct search method. This programme, with its six subroutines, is listed in Appendix F. The main programme, into which the data is read, calculates all the constants related to the input data. It also contains the direct search method, the output, and the CALL statements to the various subroutines. Subroutine EVAL calculates the numerical derivatives, while subroutine XMAT formulates the linear programming matrix. Subroutine SIMP, supplied by Mr. V. Gurunathan*, solves the linear programming problem. Subroutine CHECK, which is called after each change in a variable or variables in the direct search method, calculates the values of ϕ_j and of U, compares ϕ_j and b_j, and, if ϕ_j is greater than b_j, multiplies $\phi_j - b_j$ by 10^7 and adds it to U. Subroutine CHECK2 is identical to CHECK except that it does not multiply $\phi_j - b_j$ by 10^7 and add it to U. CHECK2 is used to determine the actual value of U. Subroutine SIZE, which is called at the end of the programme, allocates the variables to stepped sizes within the variable rings, thus producing material sizes approximating those commercially available.

---

* Graduate Student, Department of Mechanical Engineering, McMaster University, Hamilton, Ontario.

The computer programme and a typical output are listed in Appendix G. They are, in general, self explanatory, except for the following:

NNN	.....	number of univariate searches
NCALL	.....	number of linear programming solutions
U(11)	.....	value of U after univariate search
U(22)	.....	value of U after univariate search following pattern move
U(31)	.....	value of U plus $10^7 \times (\phi_j - b_j)$ after linear programming solution
U(45)	.....	feasible value of U obtained by direct search from linear programming solution

Note that there are two OPTIMUM SOLUTIONS, one being that before the variables are adjusted by calling SIZE and the other after. If the direct search method cannot find a feasible solution, the direct search step size is reduced, the magnitude of the linear programming solution reduced by one-half, and the execution returned to the direct search.

In the event that a linear programming solution does not violate any constraints a pattern move of magnitude equal to the solution is tried. 'If this move is unsuccessful it is retracted, the direct search step size reduced, and another linear programming solution attempted.

When the linear programming algorithm will not reduce the actual value of U by more than 0.05 percent, execution is terminated.

4.5 OPTIMIZATION RESULTS

The results of modified MAP method, starting from the end points of the three designs in Appendix F, were very encouraging. Both the direct search end results and modified MAP results are presented in Tables I, II and III, for Designs 1, 2 and 3 respectively. The number of linear programming - direct search iterations and approximate run time necessary to produce the modified MAP results listed in Tables I, II, and III are given in Table IV.

5. EXPERIMENTAL

A model was designed, built and tested in order to check the accuracy of the design formulae. The model was proportioned dimensionally to approximately 1/8th scale, within the limits of commercially available steel plate. The design formulae were directly applicable to this model insofar as stress was concerned.

The model dimensions and material thickness are shown in Figure 26. Ten strain gages were placed on the model, four on the bores of the rings and six on the arm flanges. The exact locations of the gages are shown in Figures 27 and 28. The model is illustrated in Figure 29 and the experimental set-up in Figure 30.

The model, as shown in Figure 29, was loaded through a 10 inch long piece of Schedule 40 steel pipe, both ends of which were turned. The cross-head of the machine and the pipe were assumed to be rigid so that the downwards movement of the cross-head, measured with a dial gage which would read to 0.0001 inch, was assumed to be the total bracket deflection. For the initial tests dial gages reading to 0.0001 inch were mounted vertically at the outside diameter of the upper ring in an attempt to measure the deflection there and thus determine the amount of deflection and rotation of the ring.

The top ring was faced and the bottom of the support blocks turned flat and parallel to the face of the top ring.

5.1 TEST PROCEDURE

Fourteen tests, in all, were performed. Details of these tests are presented below:

Test 1: Test 1 consisted of loading the model from zero to 12000 lb. in 1000 lb. increments as a trial run. During this test gages 1 and 2, which did not appear to be performing well, were changed from switch and balance channels 1 and 2, respectively, to channels 7 and 12. In addition, the dial gage mounted on the upper ring at arm #2 was moved.

Test 2: Test 2 was a repeat of test 1. Again, gages 1 and 2 did not appear to be performing well.

Tests 3 and 4: In order to ascertain if gages 1 and 2 were malfunctioning, the model was tested as a two-armed bracket by shimming arms #2 and #4 so that arms #1 and #3 did not touch the bedplate. Thus, gages #1 and #2 were halfway between loads instead of under the load. Loading was from zero to 3500 lb. and down to zero again in 500 lb. steps. During these tests the gages appeared to function well.

Tests 5 and 6: Tests 5 and 6 consisted of complete load-unload cycles of the model as a four-armed bracket. Loading was from zero to 12000 lb. and down to zero in 1000 lb. steps. During the unload cycle gage #6 and the dial gage measuring the deflection of the upper ring at arm #2 seemed to be sticking, i.e. the readings changed very little with decreasing load.

Test 7: Test 7 consisted of a complete load-unload cycle with dial gage readings only being taken. The dial gage readings taken were the total bracket deflection and the deflection of the upper ring measured at arms #1 and #4. The dial gage measuring the upper ring deflection at arm #1 appeared to be sticking during the first part of the unload cycle.

Test 8: Test 8 was a repeat of tests 5 and 6. Again, the dial gage measuring the deflection of the upper ring at arm #1 appeared to be sticking at the start of the unload cycle, as did strain gage #6.

Test 9: Test 9 was a repeat of test 7, only with the vertical ring deflections being measured at arms #2 and #4. The readings at arm #2 did not decrease when the load decreased from 12000 lb. to 8000 lb., consequently no further readings were taken here during this test.

Test 10: In test 10 the model was tested as a two-armed bracket by shimming arms #1 and #3. Loading was from zero to 5000 lb. and back to zero in 500 lb. steps. In this test the readings of gage #6 actually increased slightly at the start of the unload cycle. Measurements of the upper ring deflections at the outside diameter were not taken in this test. It was postulated at this time that the erratic behaviour of the dial gages measuring the vertical deflection of the upper ring at arms #1 and #2 might be caused by the arm moving outwards during the loading cycle, then being held by friction at the start of the unload cycle.

Tests 11 and 12: Tests 11 and 12 consisted of loading the bracket to 12000 lb. from zero, then unloading to zero, in 1000 lb. steps. Two dial gages were mounted horizontally and radially so as to measure the outwards movement of arms #1 and #2. The results were very enlightening. Arm #1 moved outwards approximately 0.0025 inches on the load cycle, then the dial gage reading remained almost constant while the load decreased to 8000 lb., after which its readings started to decrease, returning near its initial value at zero load. The dial gage on arm #2 showed a slight decrease at the start of the load cycle, then increased for a net change from its initial value of 0.0013 inches.

On the unload cycle it increased slightly down to a load of 8000 lb., at which point it started to decrease, returning to its initial value at zero load.

Test 13: In view of the findings of tests 11 and 12, it was decided to lubricate the bedplate and the bottom of the support blocks with heavy grease. Test 14 consisted of loading the model from zero to 12000 lb. in 1000 lb. steps, then unloading in the same manner. The only dial gage reading taken was that o f the total bracket deflection. Even with the support blocks lubricated in this manner the readings of gage #6 remained constant as the load decreased from 12000 lb. to 10000 lb.

Test 14: Test 14 was performed as a check on Test 13, and consisted of loading the model from zero to 12000 lb. in 2000 lb. steps, then unloading in the same manner.

5.2 RESULTS

The results of the 14 tests are presented in tabular form in Appendix H. The strains have been converted to stresses by multiplying the strain readings, in micro-inches per inch, by the modulus of elasticity of steel, 30 x 10^6 p.s.i. Beside each column of experimental results is a column of theoretical results obtained from an analysis identical to that used in the optimization except that the upper flange stresses have been divided by $\cos^2\alpha_1$. Also included in each table are the theoretical slopes of the curves and experimental slopes for the load cycle, unload cycle, and last 5 points on the load cycle. The slopes were obtained by fitting the best straight line through the points using the least squares method.

Experimental points for Test 13 are plotted against theroetical curves in Figures 31 to 37, as listed below:

Figure 31 - Upper Ring Stresses - Gages 1 and 4
Figure 32 - Upper Ring Stresses - Gages 2 and 3
Figure 33 - Lower Flange Stresses - Gages 5 and 6
Figure 34 - Upper Flange Stress - Gage 7
Figure 35 - Upper Flange Stresses - Gages 8 and 9
Figure 36 - Upper Flange Stress - Gage 10
Figure 37 - Bracket Deflection

Table V contains the experimental and theoretical stresses and deflection at the 12,000 lb. load, the percentage deviation from the theoretical, and the experimental and theoretical slopes of the curves, all from Test 13.

6. DISCUSSION

6.1 DESIGN INVESTIGATION

There are several important points concerning the results of the theoretical investigation of the stresses and deflections in the arms and rings.

First, the formulae derived by the author for predicting the shear and bending deflections appear to be sufficiently accurate when compared to the deflections obtained by approximating the beams with 50 linear steps, as shown in Appendix H. For large slopes, the shear deflections obtained from the formulae based on Timoshenko's are considerably lower than those obtained from simple beam theory. Note, however, that the formulae obtained using the approximation to the area moment of inertia of a section are functions of small differences and small natural logarithms, consequently they are accurate only when calculated with a high degree of accuracy, such as on a desk machine or digital computer.

Second, all the formulae are based on the assumption that the bending stress in a tapered beam can be predicted from simple beam theory. In the case of a lower bracket arm, this is probably reasonable when predicting the bending stresses near the hub, however, the formulae for the shear stress and both bending and shear deflections depend on this being true along the length of the arm, consequently, these are probably inaccurate.

Third, the ring formulae, as mentioned earlier, are supposedly accurate for predicting stresses at large angles to the lines of actions of the loads but are inaccurate, as one would expect, for predicting the stresses at the loads. The deflections of the rings under radial loads should be somewhat less than predicted if the work of Blake [1] is applicable to rings with more than two loads. Since the loads are not point loads, but are distributed across the flanges and along the webs, the actual ring stresses and deflections should be somewhat less than expected, providing the technique for predicting the loading on the rings is reasonably accurate.

Fourth, and last, the analysis of the loading on the various components of the structure and the overall deflection of the structure is based on the assumption that the only reactions generated on the structure, at the arm tips, are vertical. This may or may not be true.

6.2 OPTIMIZATION

The results of the work on optimization provide much insight into the optimization of nonlinear functions with nonlinear constraints. This work has added evidence to the hypothesis that the direct search method can stall on constraints. The technique of adding the modified MAP method to a direct search method provided an algorithm which was able to solve this particular problem. The Multiple-Gradient Summation Technique could probably be modified in the same manner as MAP, that is, allowing moves along $\tilde{N}$ to violate constraints, then using the direct search method to bring the optimization back into the feasible region.

The optima reached by the modified MAP algorithm are very interesting. Optimization of Design 2, starting from three different starting points produced three identical solutions, while that of Design 3 produced three similar solutions, differing only slightly in IDL, WID, and ALPHA1. Optimization of Design 1, however, produced two identical solutions and one markedly dissimilar, the dissimilarity being in TF and WID. For Starting Point 1,

$$\mathrm{TF} = 1.75 \text{ inches}$$

$$\mathrm{WID} = 23.75 \text{ inches}$$

while for Starting Points 2 and 3,

$$\mathrm{TF} = 2.875 \text{ inches}$$

$$\mathrm{WID} = 15.0 \text{ inches}.$$

This indicates the presence of multi-nodal optima for this particular design, a phenomenon which can occur in nonlinear optimization.

It is felt that the modified MAP method, although possibly not the fastest method, is suitable for most nonlinear optimization problems. Another technique, somewhat similar to the

Multiple-Gradient Summation Technique, would be to project the gradient of the optimization function onto the voilated constraint, then follow that particular constraint until another is reached. This in effect, would be the nonlinear equivalent of a linear programming method, and could be used when the direct search method stalls on a constraint.

6.3 EXPERIMENTAL

Examination of the experimental results in Table V, Figures 31 to 37, and Appendix H, indicates the following:

(1) The bore stresses in the rings under the loads, as expected, were very much different from those predicted.

(2) The bore stess in the lower ring half-way between loads was reasonably close to the theoretical while that in the upper ring was much higher than predicted

(3) The stresses on the lower flange of arm 1 at gage 5 were fairly close to the theoretical while those at gage 6 were low.

(4) The stress on the upper flange at gage 7 on arm 1 was lower than expected while that at gage 10 on arm 2, in a similar location, was close to the expected value.

(5) The stresses at gages 8 and 9 on the upper flange of arm 1 were higher than expected, with that at gage 9 being slightly higher than that at gage 10.

(6) The total bracket deflection was much larger than predicted, the deflection curve resembling a parabola rather than a straight line.

(7) Several of the curves appeared to "stick" at the start of the unload cycle.

Measurements of the horizontal deflections of the arms (Tests 11 and 12) indicated that the arms did move outwards a large amount on loading, then were held by friction until the load decreased approximately 4000 lb. This probably accounts for the "sticking" readings of the strain gages.

There are a number of possible explanations for the differences between the theoretical and experimental stresses. Among these are:

(1) Compressive loads applied to the arm tips by frictional resistance to the radial movement of the arms.

(2) The fact that the arms are relatively short, hence the strain readings can be affected by local loading and by changes in section.

(3) Built-in strains created during fabrication.

(4) Non uniformity of loading due to differences in dimensions and material thickness.

(5) Effect of the large weld on the area moment of inertia of arm sections.

(6) The maximum stresses may not have been in the directions predicted.

Since the maximum positive error in the stresses was only 31 percent while the normal factor of safety is generally 3, the stress formulae are reasonable for use in predicting maximum stresses. The bracket deflection, however, was 131 percent larger than expected. Part of this was due to initial deflections experienced as the bearing surfaces came into better contact, but even the slope of the line through the last 5 experimental points was 83 percent higher than the theoretical.

Actual brackets do not experience large radial movements of the arms since the arms are keyed or bolted to soleplates. This probably reduces the bracket deflection considerably but causes a large radial reaction at the arm tip. Consequently, one would expect the total deflection to decrease and the compressive stresses in the arms and in the upper ring to increase.

6.4 RECOMMENDATIONS

There are several subjects presented in this thesis that bear further investigation, both experimentally and theoretically. These are:

(a) The radial deflections of thick rings. As mentioned previously, Blake [1] has found, experimentally, that the radial deflections of a ring in diametral compression, loaded at the outside diameter, are less than predicted by theory. However, Blake's deflection measurements were made at the bores of the rings rather than at the outside, where the loads were applied. Further work might be done for cases of more than two loads in both compressive and tensile directions with deflection measurements being made at the inside and outside diameters.

(b) The stresses in thick rings. Experimental results have confirmed that the stress formulae for thick rings are reasonably accurate at predicting stresses at 90 degrees to the line of action of loading in diametrally loaded rings. From a design point of view similar investigations should be carried out to determine the degree of accuracy of these formulae for predicting the stresses between loads for rings with more than two loads.

(c) The critical buckling load for a radially loaded compression ring. The formulae derived by the author should be checked experimentally. In addition, the differential equations describing the buckling could be set up and solved numerically as a check on the energy method used by the author.

(d) The stresses and deflections in short beams, both straight and tapered. Most literature on beams seems to deal with the stresses in long beams, however, knowledge of the locations and magnitudes of maximum stresses in short box or I-beams and a reasonably accurate method, either theoretical or empirical, would be useful to the designer.

(e) The loading and stresses in lower brackets. As a matter of academic interest, a more detailed theoretical and experimental study of lower brackets to determine why the experimental results in this thesis are so different from the theoretical predictions might be useful for the understanding of the behaviour of similar structures.

(f) The optimization of designs. The optimization problem formulated in this thesis, although incomplete, was part of a real design problem, and as such, contained all the elements necessary to demonstrate that design optimization is both possible and practical. However, the technique presented in this thesis is just one of many that might have been used. Much more work remains to be done in the field of design optimization, particularly in the development and application of techniques to real industrial design problems. The author suggests that further work in this area be carried out, and, in particular, that techniques permitting large moves with consequent violation of constraints followed by a technique which returns the optimization to a feasible design region be investigated.

7. CONCLUSIONS

Much of the work in this thesis pertains directly to lower brackets, however, the formulae derived, including that of the critical buckling load for a ring loaded in radial compression, are applicable to the design of other structures.

Designs of supporting structures similar to lower brackets should include analyses to determine if loading at right angles to the plane of the structure causes large deflections or loads in the plane of the structure. If so, these must be considered in the design.

The modified MAP technique presented in this thesis illustrates just one method of optimizing a nonlinear design. The optimization function, which in this case was minimum weight, can readily be altered in industrial design situations to include manufacturing costs since these are generally functions of the design variables.

ILLUSTRATIONS

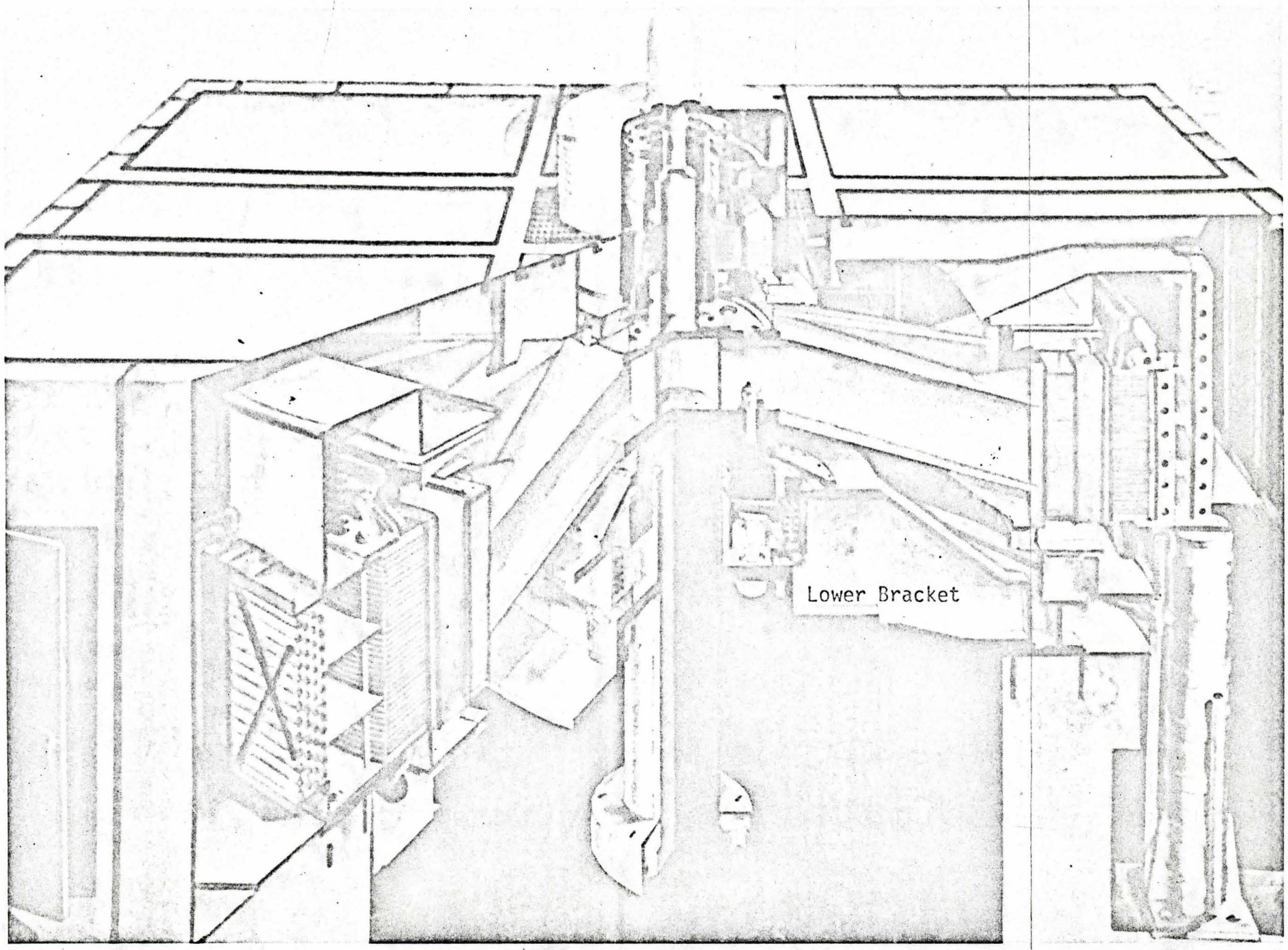

Figure 1. Section of Water Wheel Generator

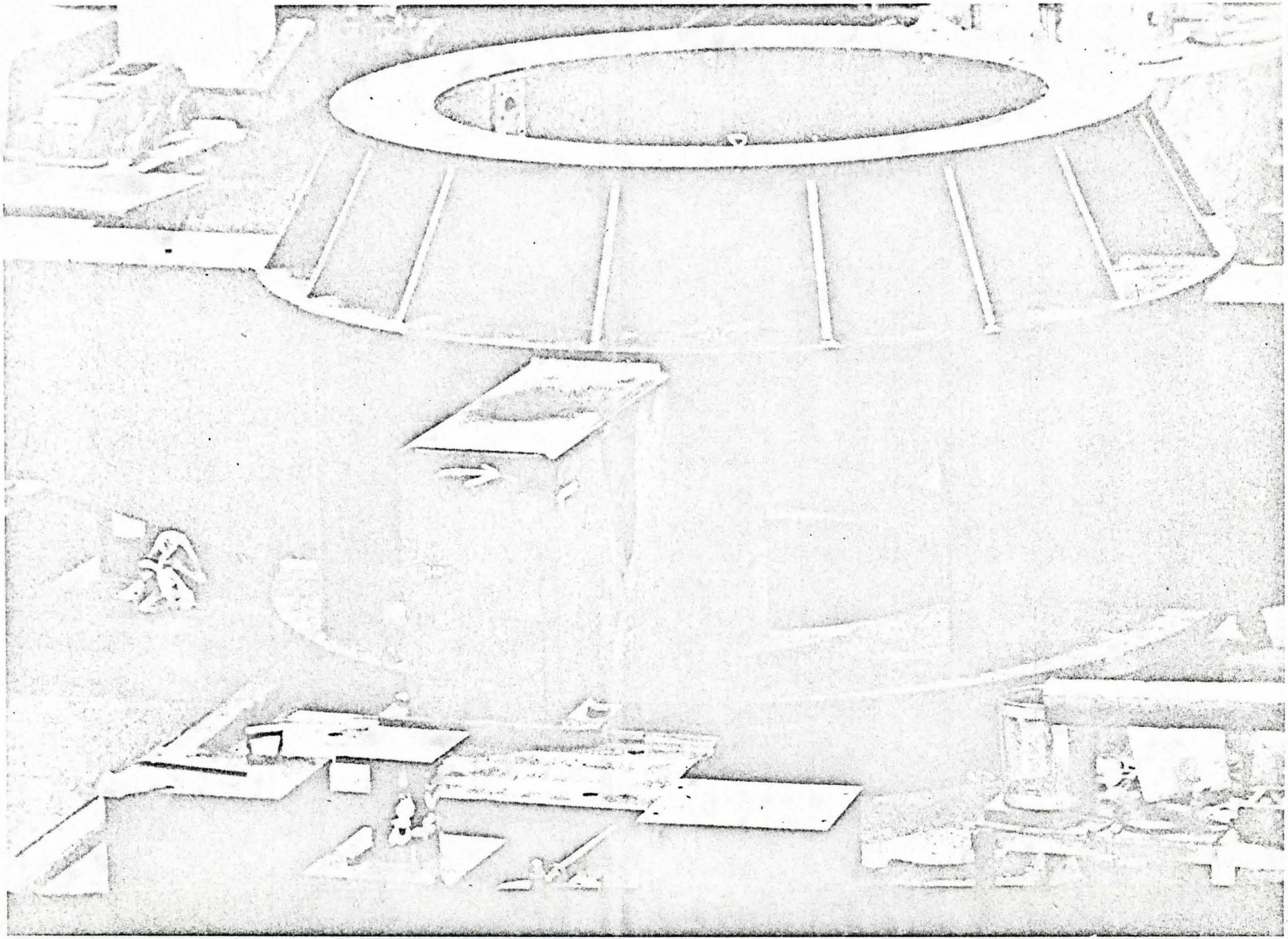

Figure 2. Lower Bracket

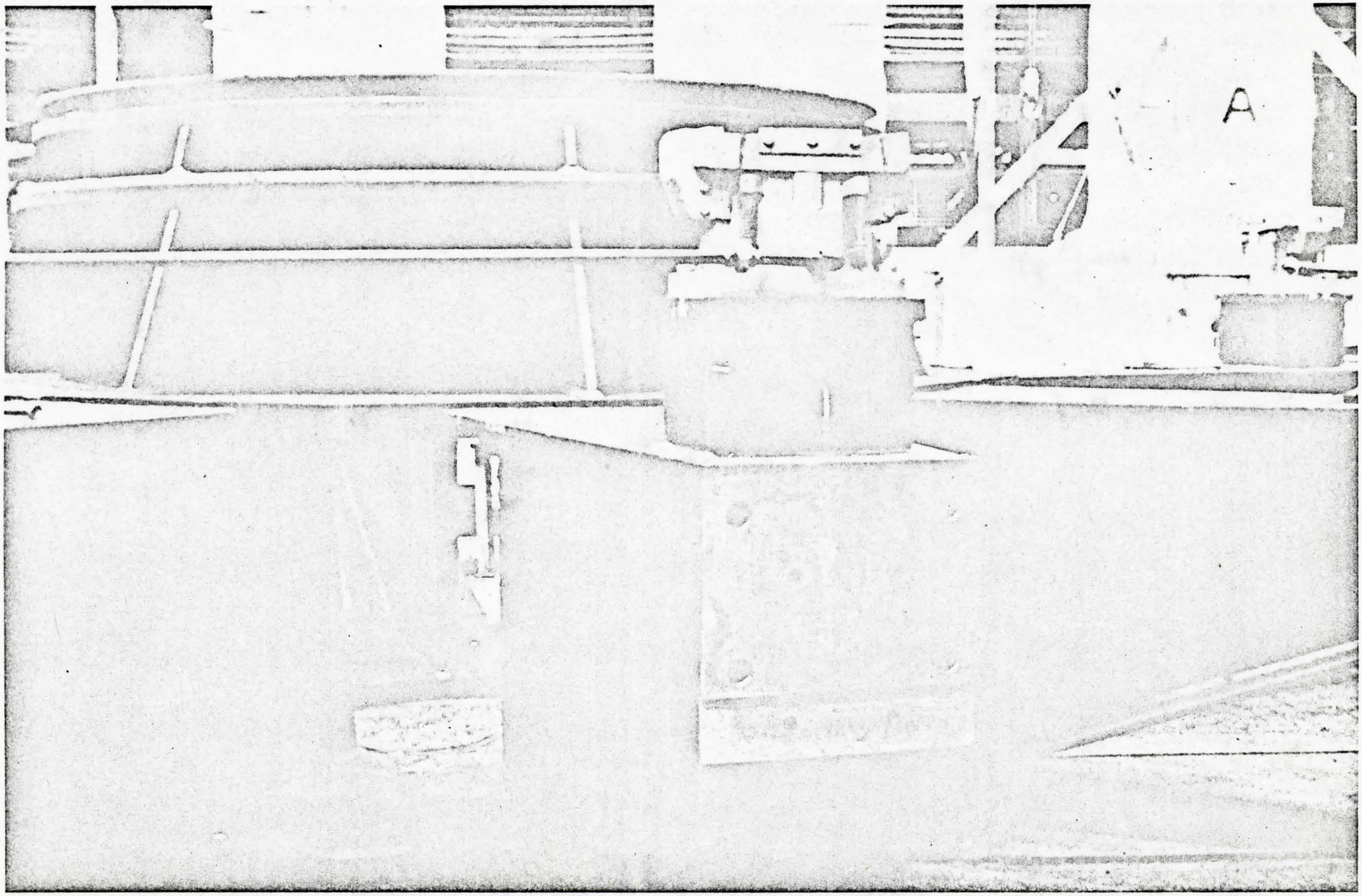

Figure 3. Lower Bracket

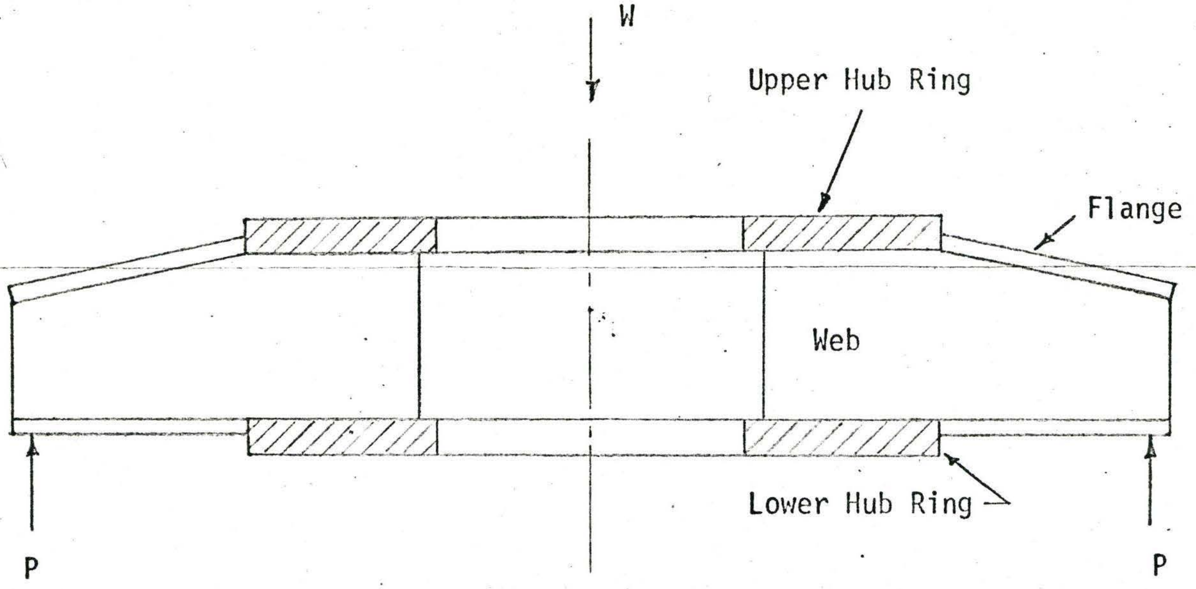

Figure 4. Section of Bracket

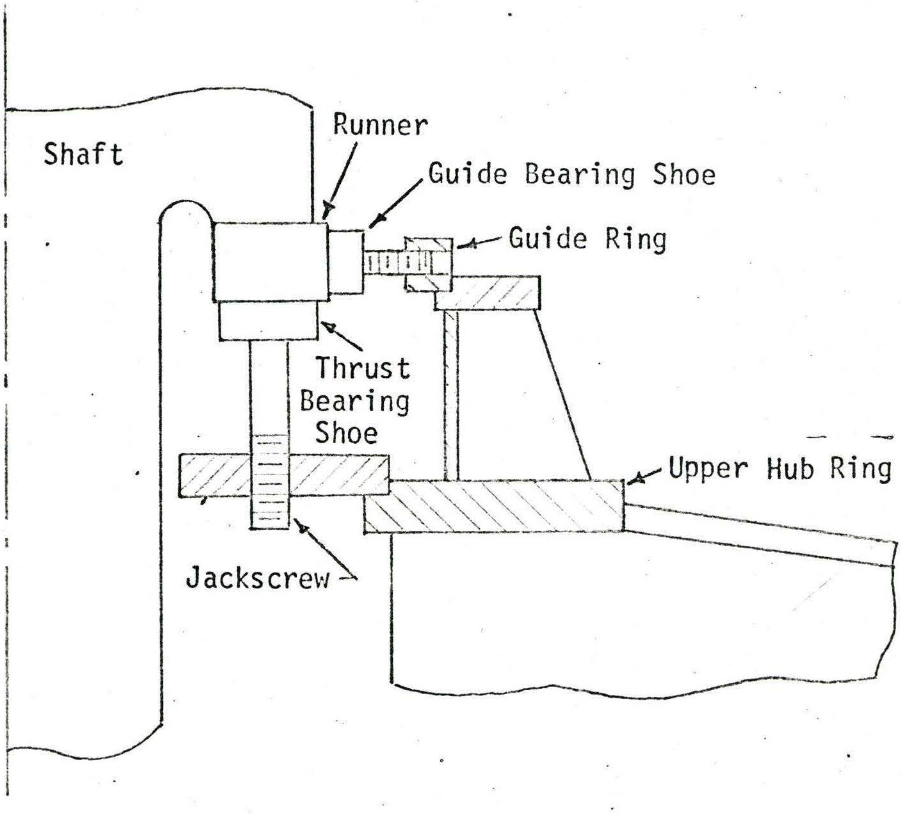

Figure 5. Section of Bearing

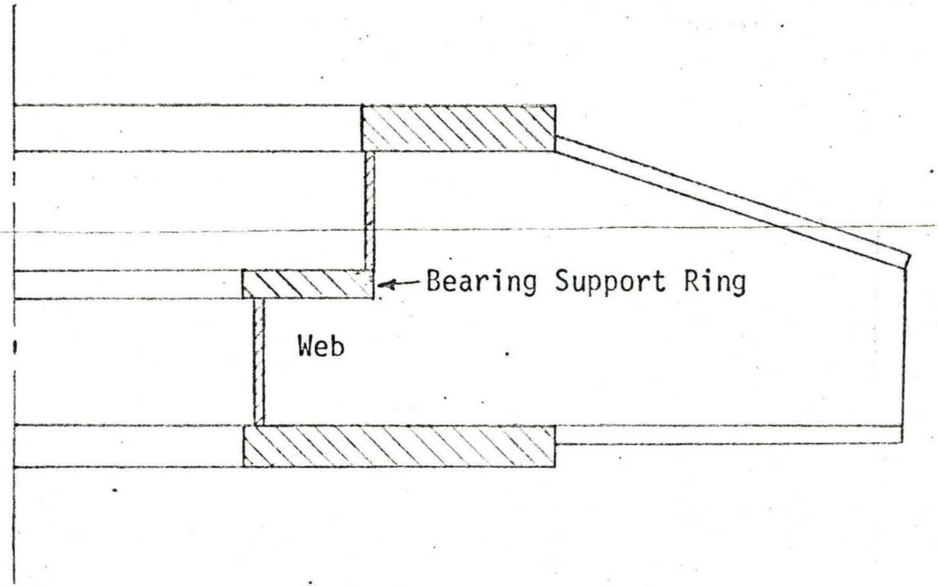

Figure 6. Section of Three Ring Bracket

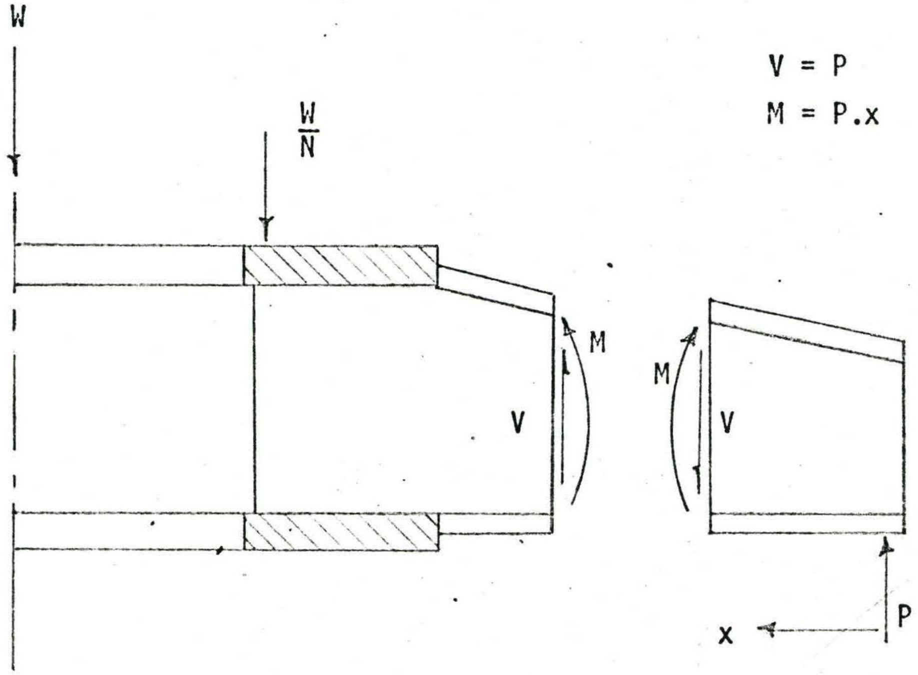

Figure 7. Loading on Structure

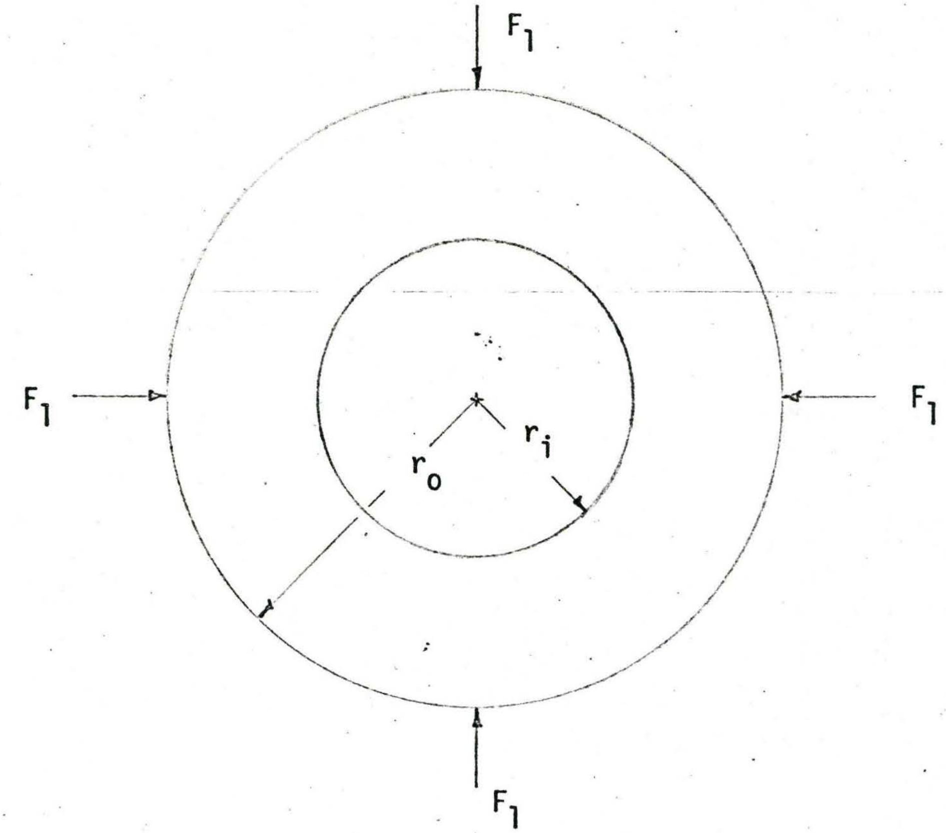

Figure 8. Loading on Upper Ring

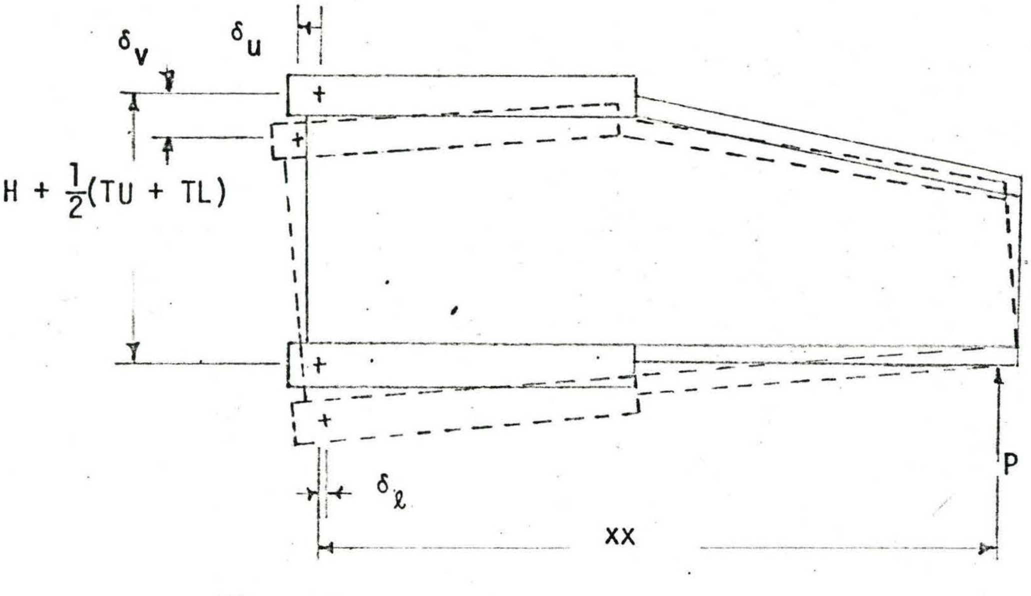

Figure 9. Deflection of Bracket Due to Rotation of Hub

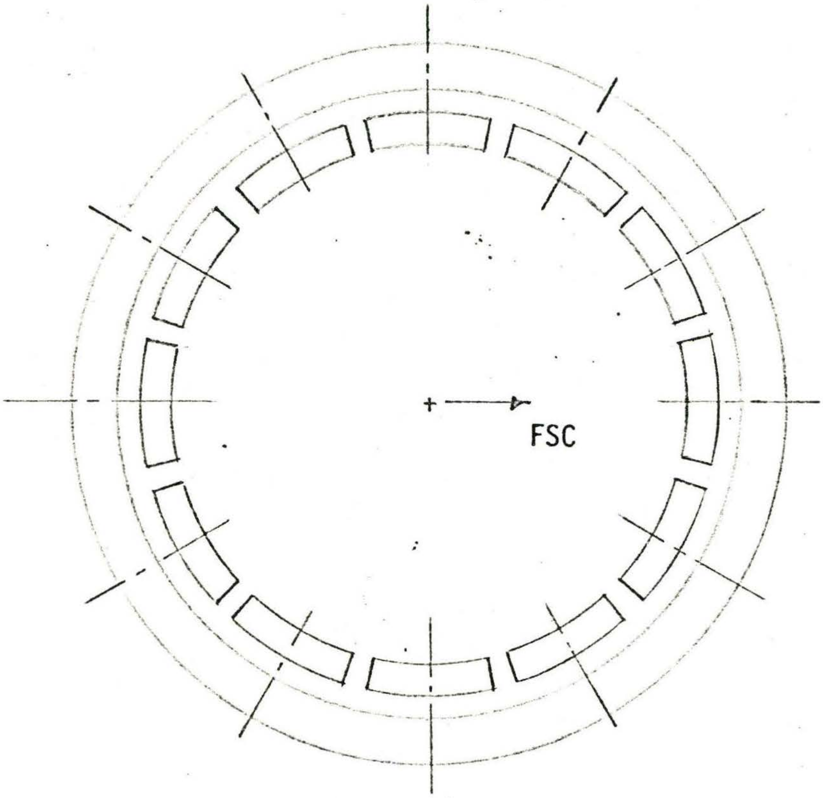

Figure 10. Plan View of Guide Bearing Under Short Circuit Loading

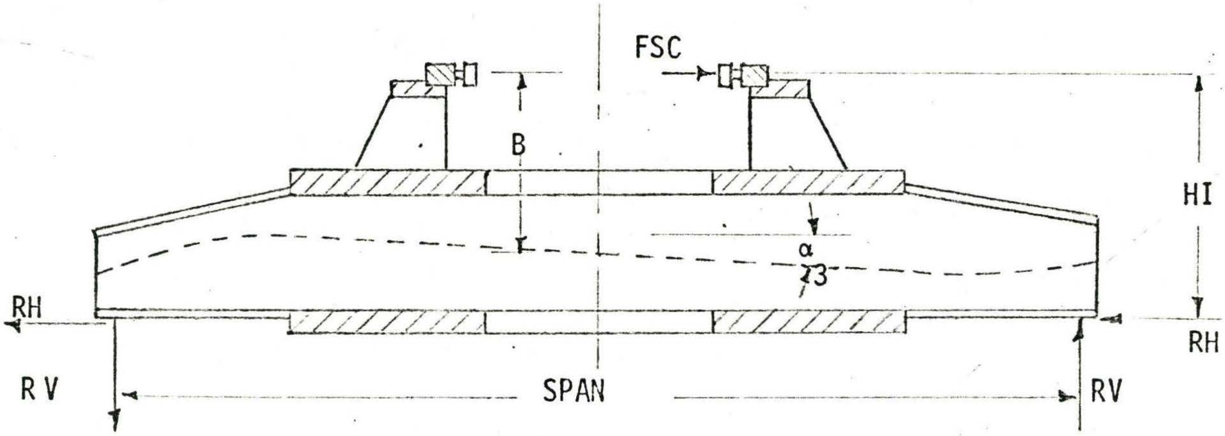

Figure 11. Schematic Section of Guide Bearing and Bracket Under Short Circuit Loading

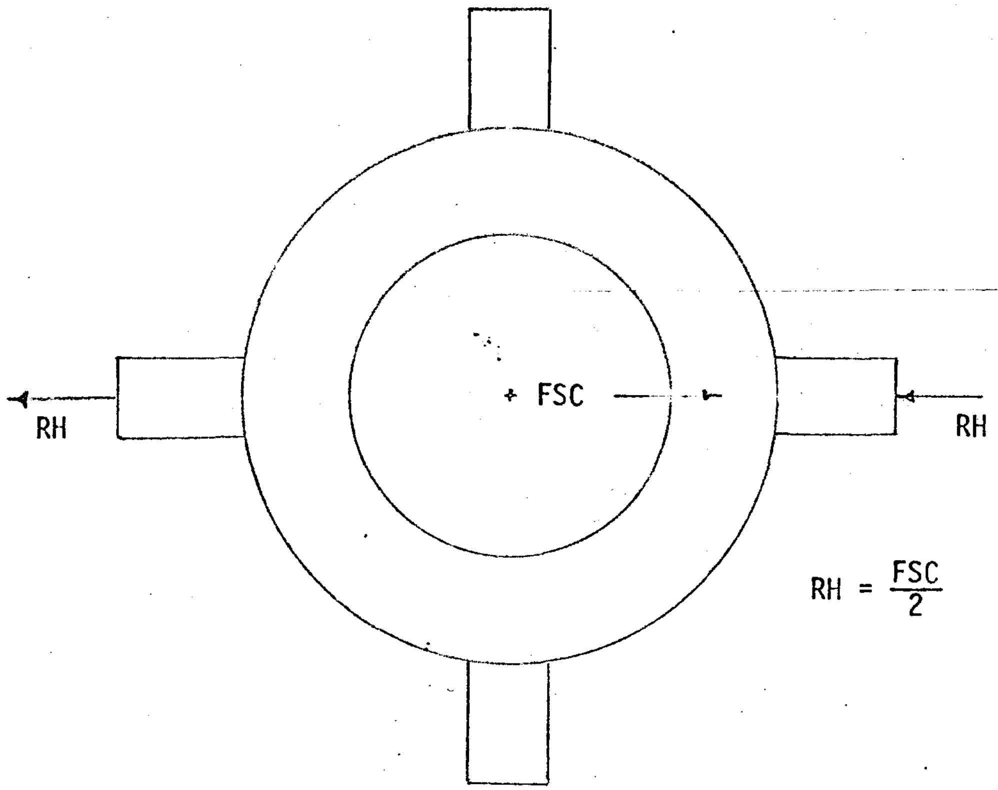

Figure 12. Plan View of Bracket Under Short Circuit Loading

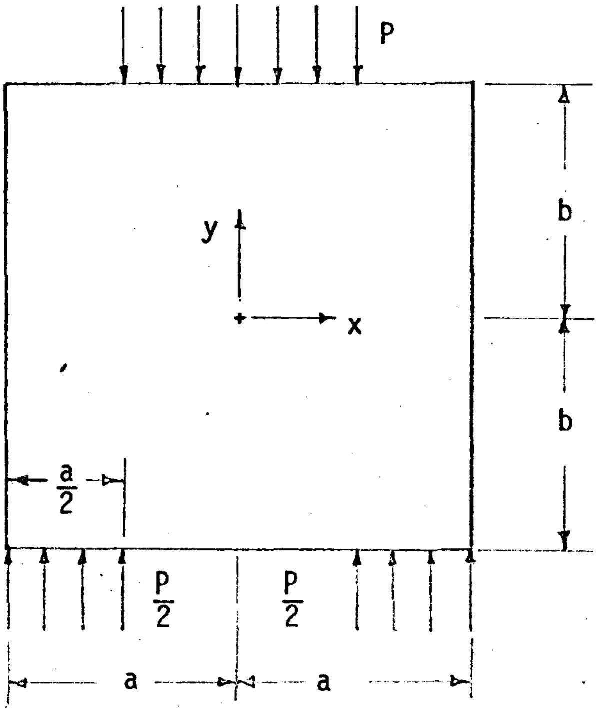

Conway, Chow, and Morgan [5]

Figure 13. Loading on Square Plate Beam

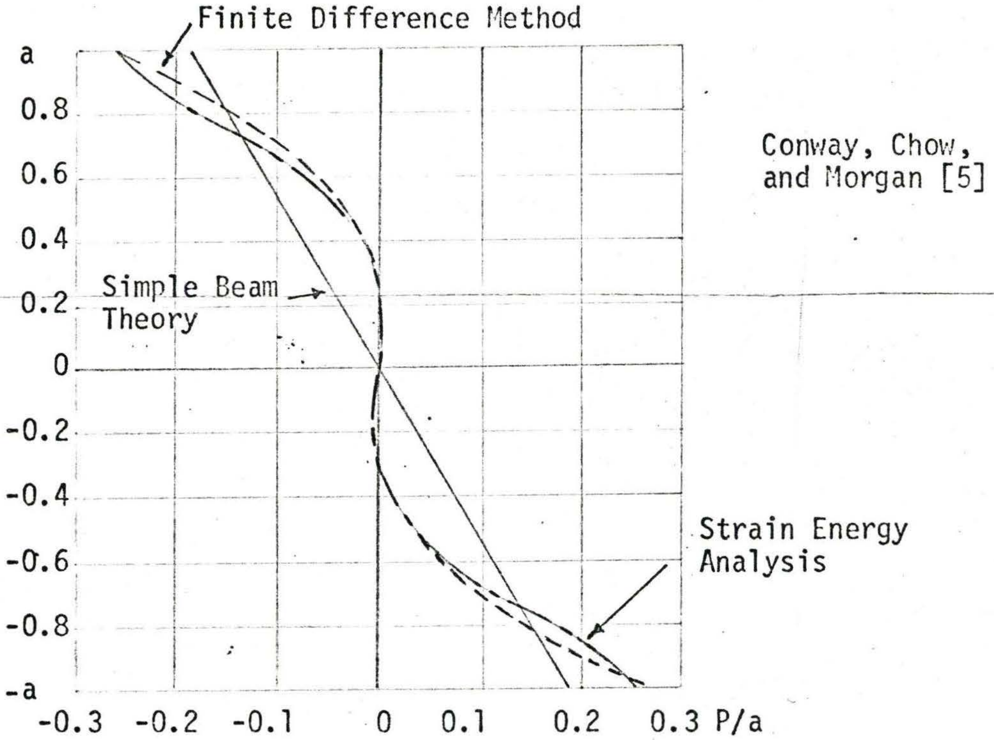

Figure 14. Variation of Bending Stress on Sections x=± a/2 for Square Plate Beam

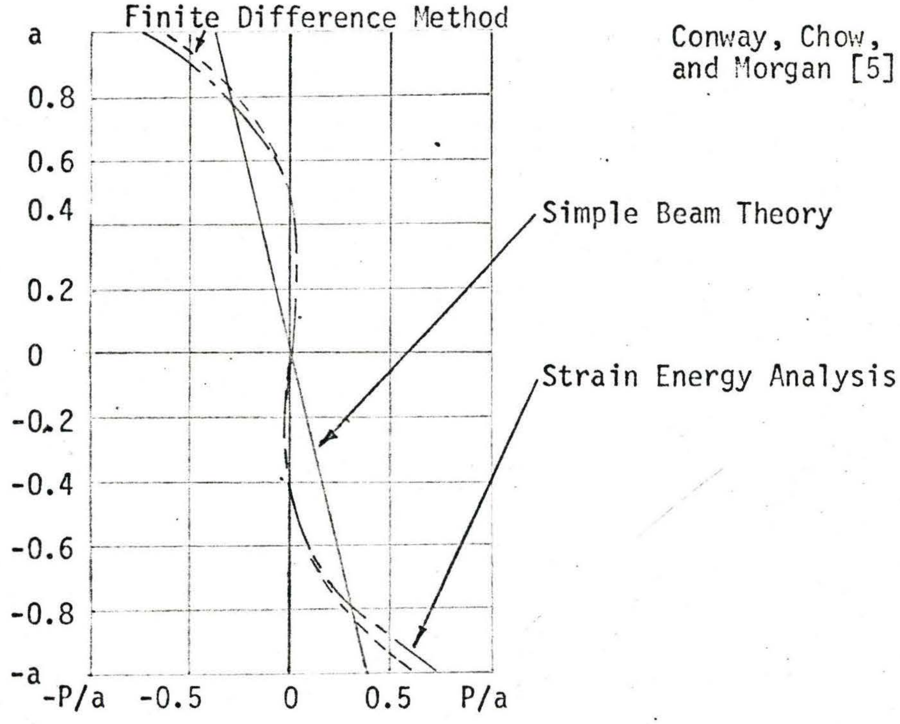

Figure 15. Variation of Bending Stress at x=0 for a Square Plate Beam

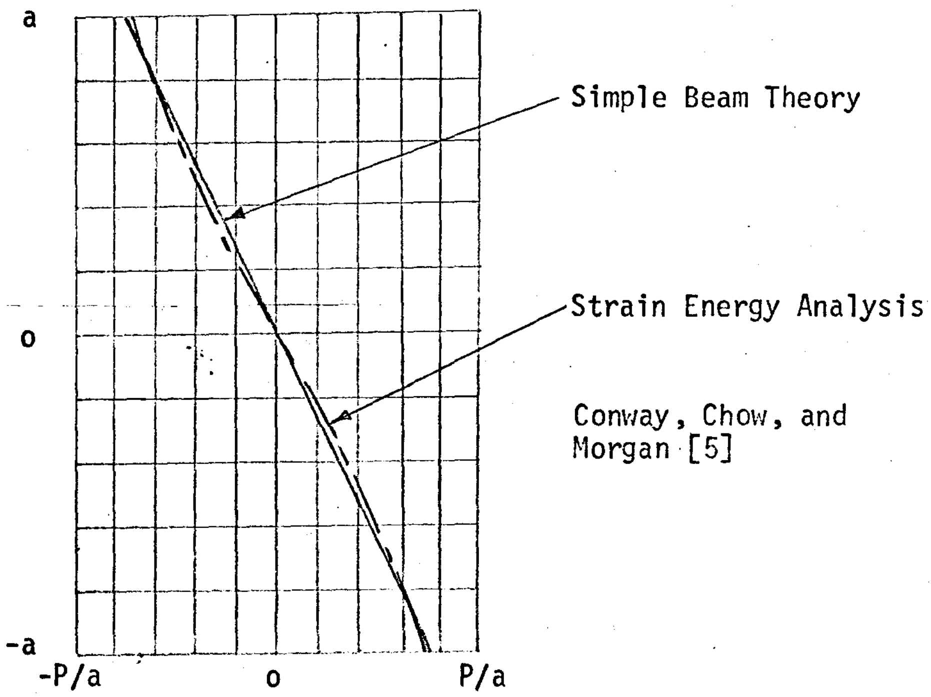

Figure 16. Variation of Bending Stress on Sections $x = \pm a/2$ for a Plate with $b/a = 1/2$

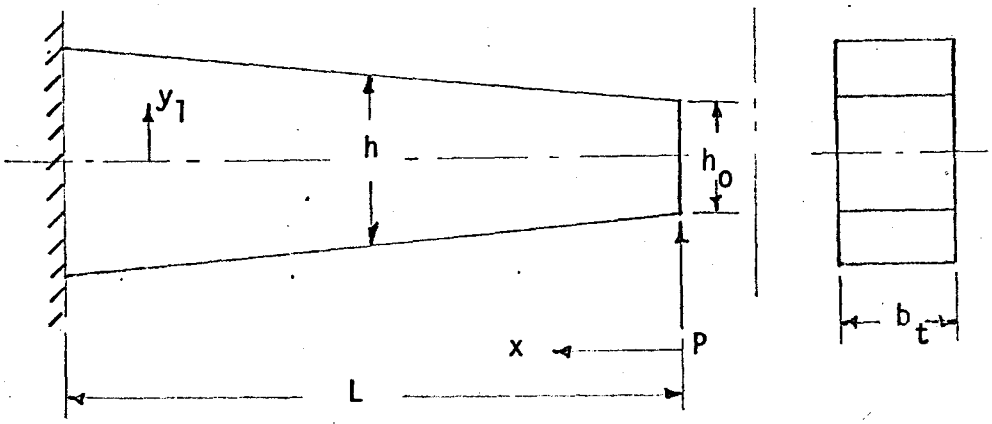

Figure 17. Tapered Solid Beam

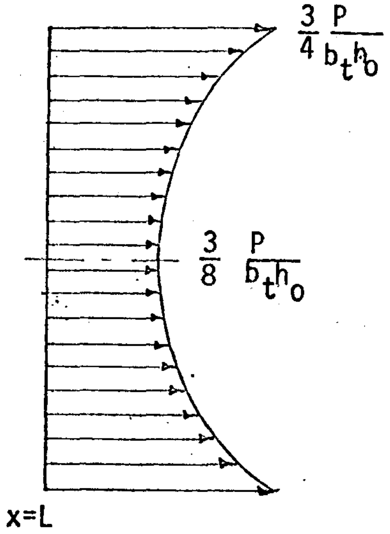

Timoshenko [7]

Figure 18. Horizontal Shear Stress in a Solid Tapered Beam with $h_L=2h_o$ at $x=L$

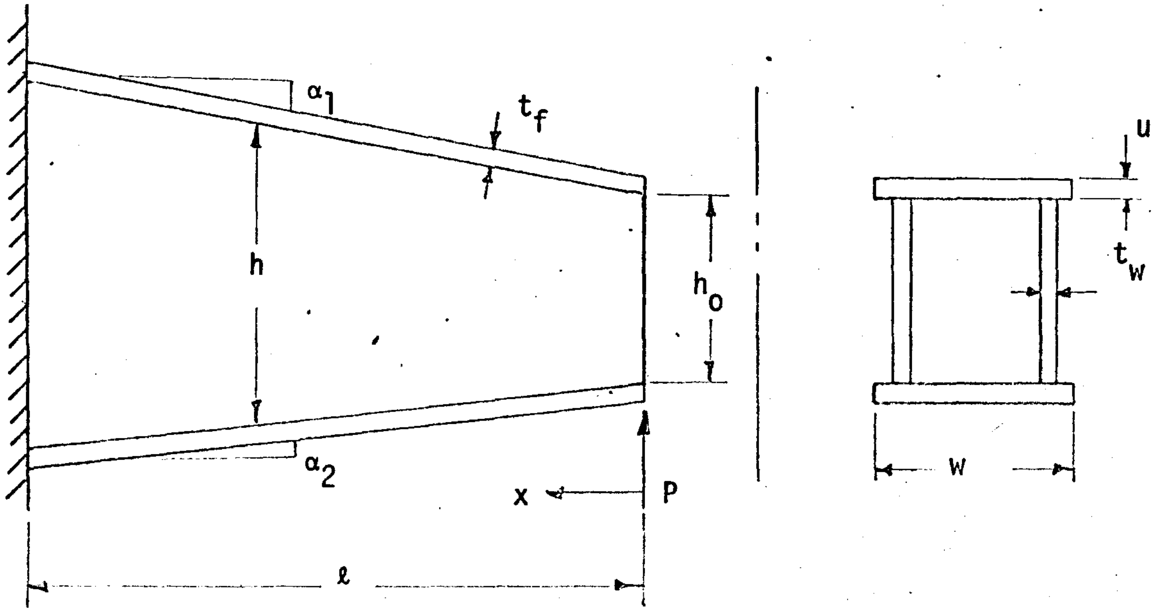

Figure 19. Tapered Box Beam

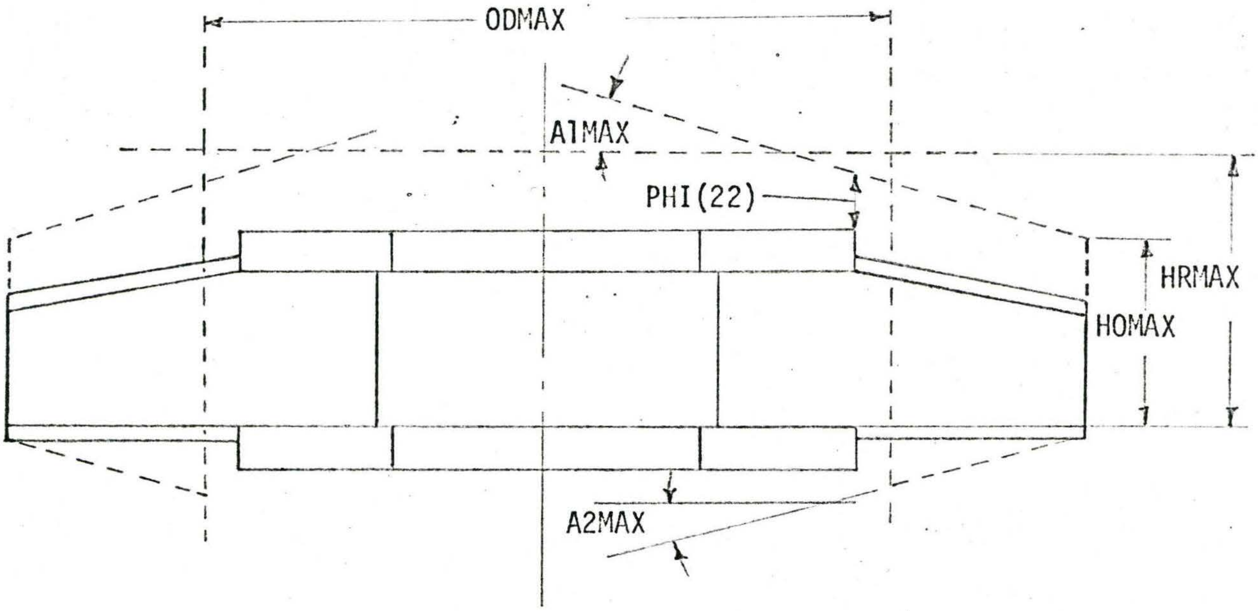

Figure 20. Bracket Profile Limits

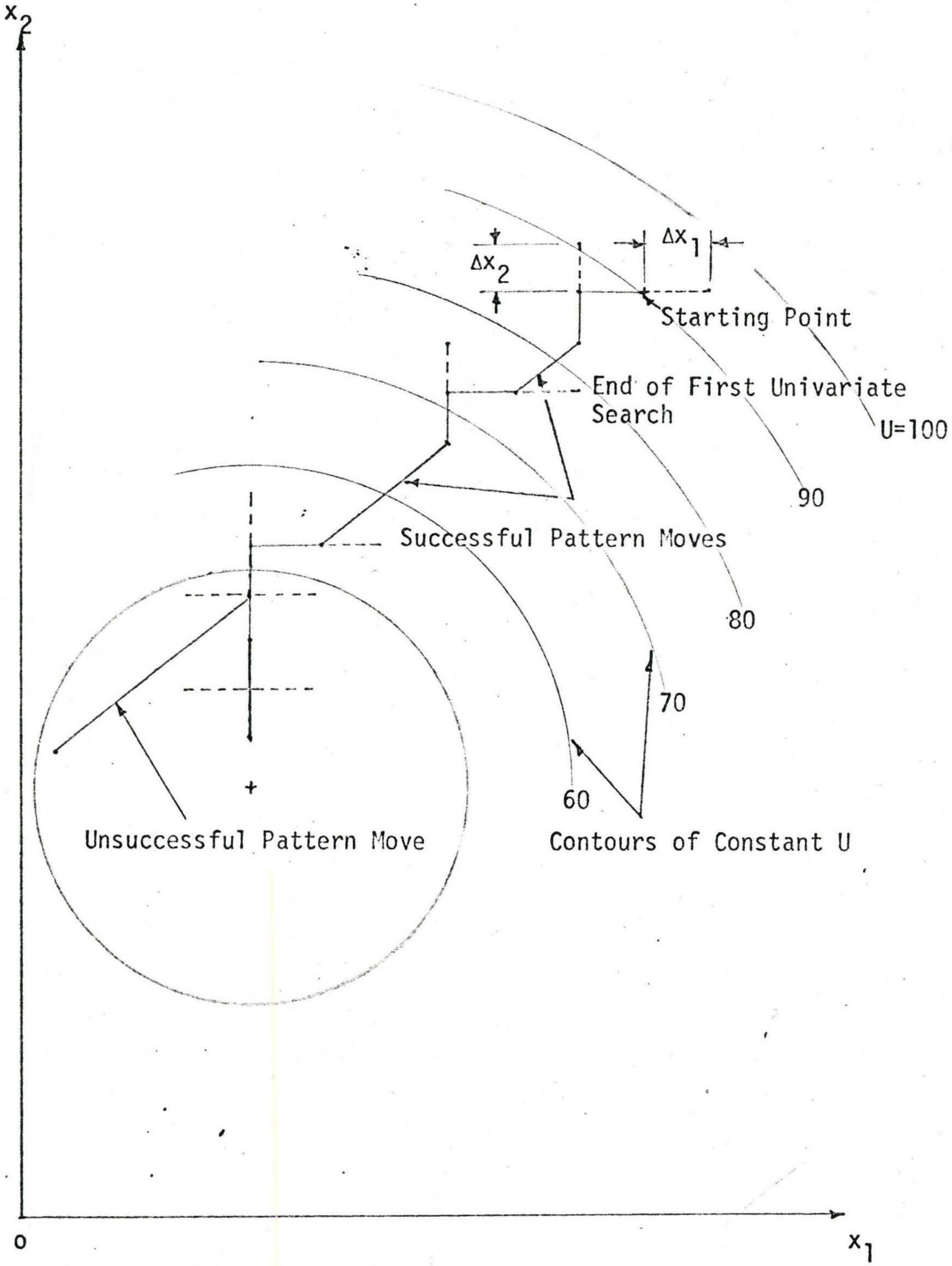

Figure 21. Direct Search Method

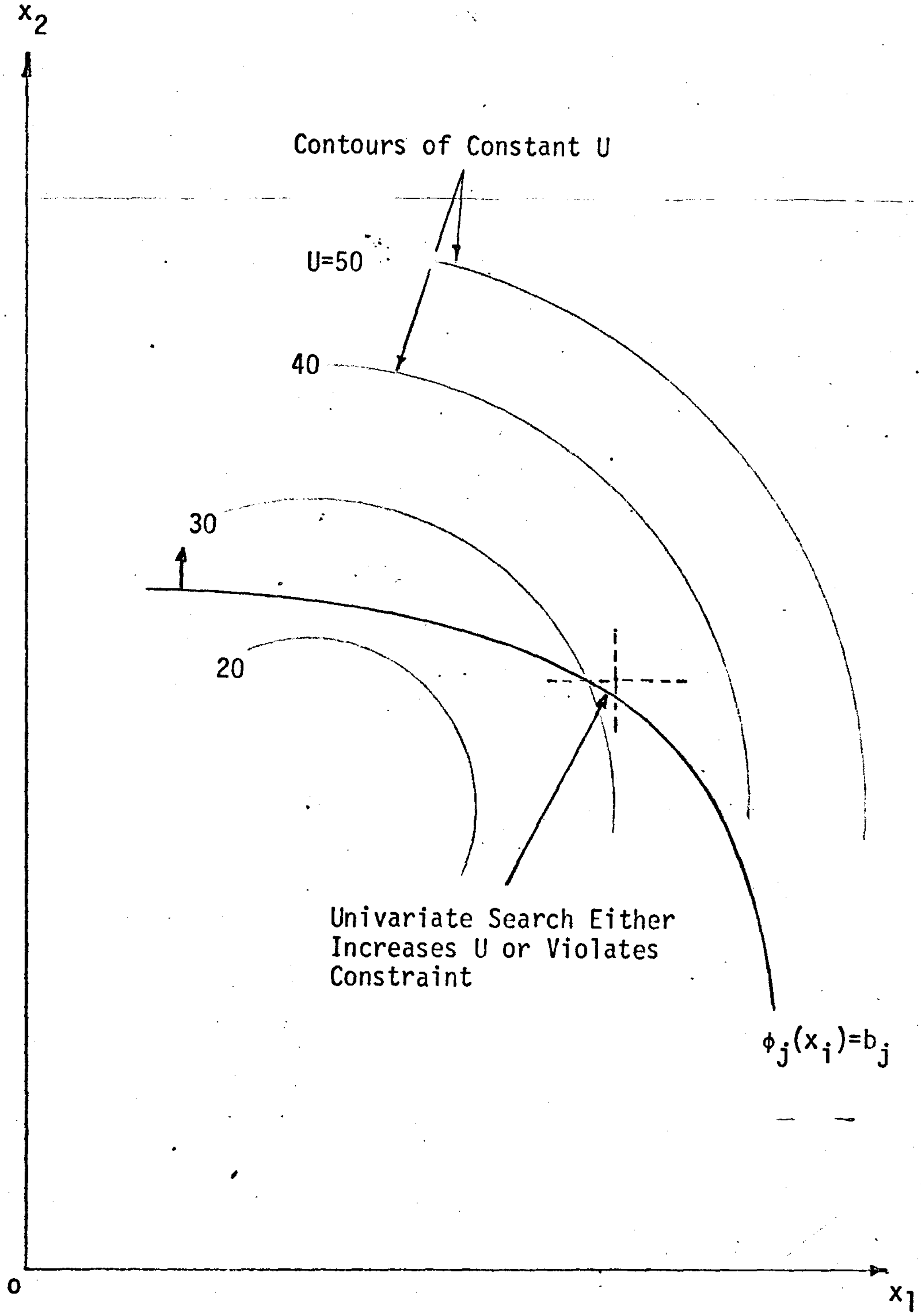

Figure 22. Stalling of Direct Search Method on a Constraint

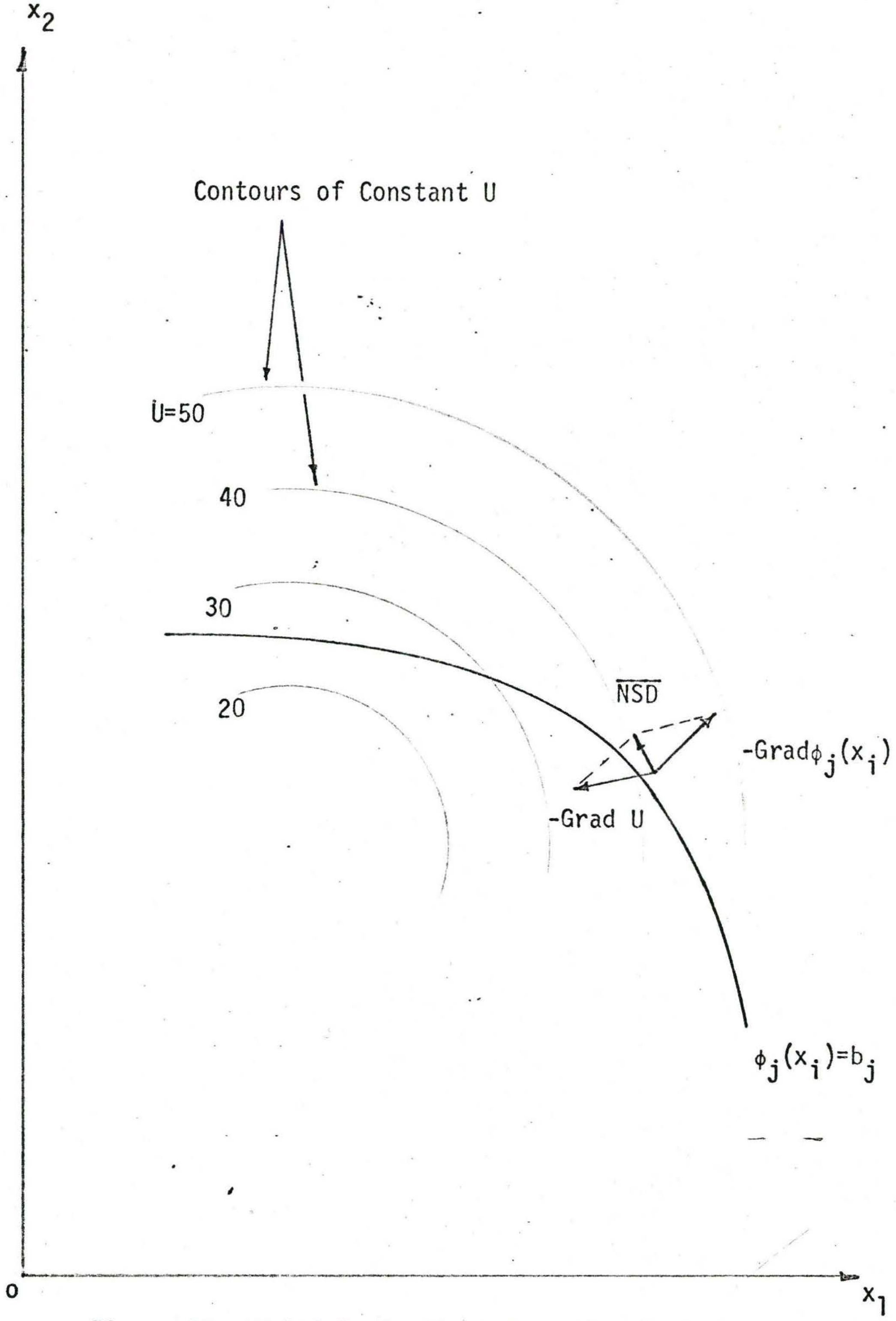

Figure 23. Multiple Gradient Summation Technique

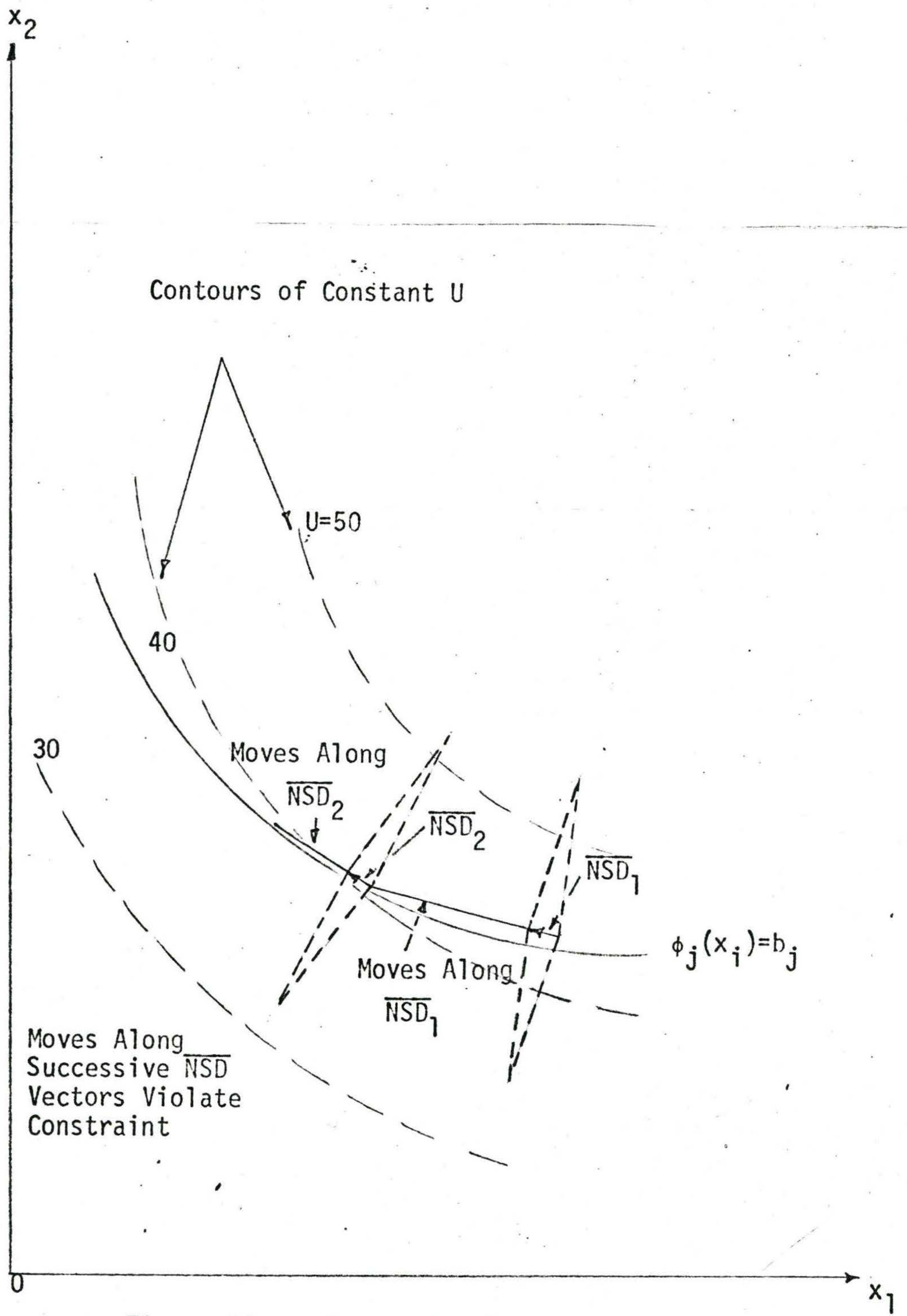

Figure 24. Multiple-Gradient Summation Technique With Concave Constraint

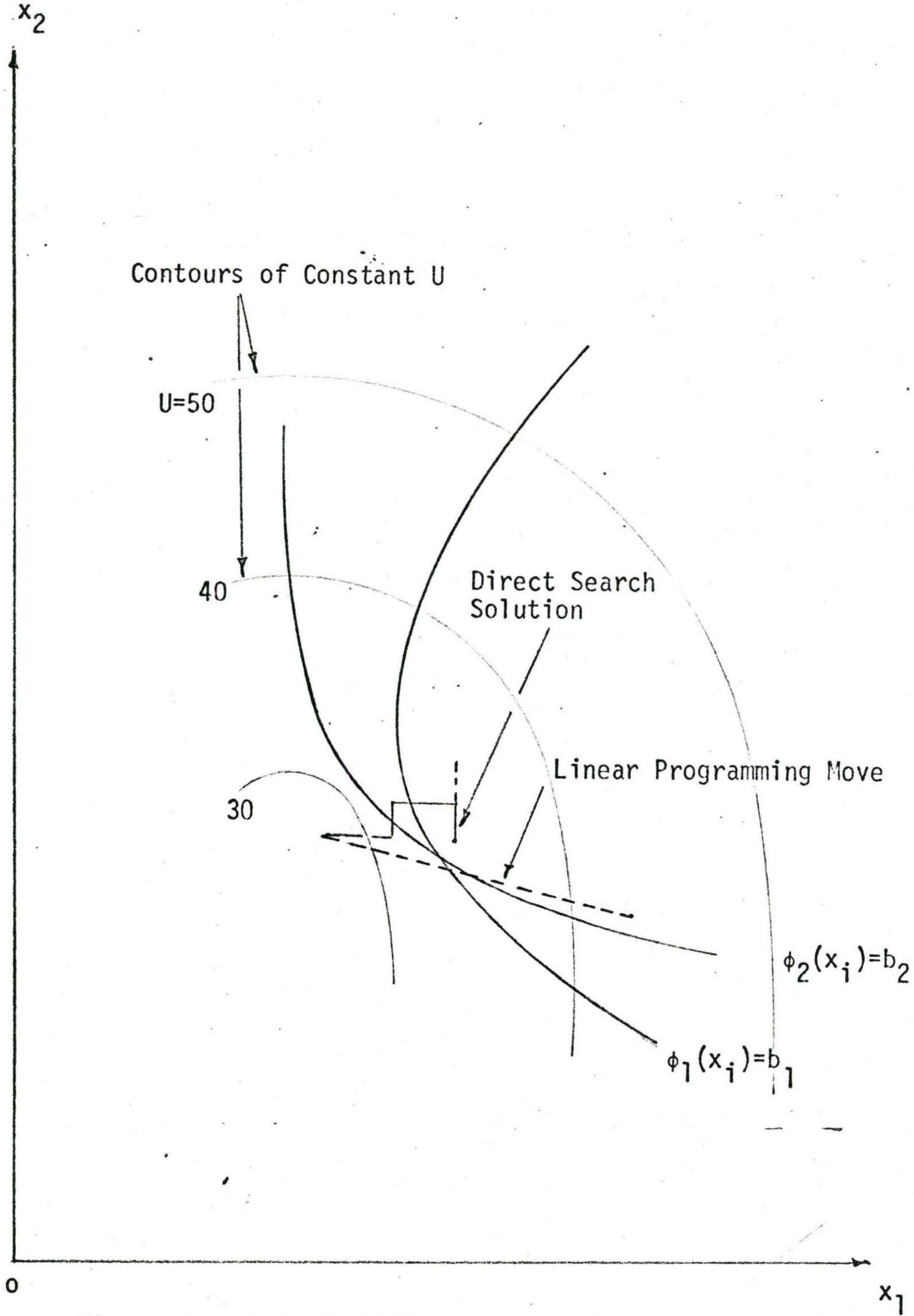

Figure 25. Modified MAP and Direct Search Method

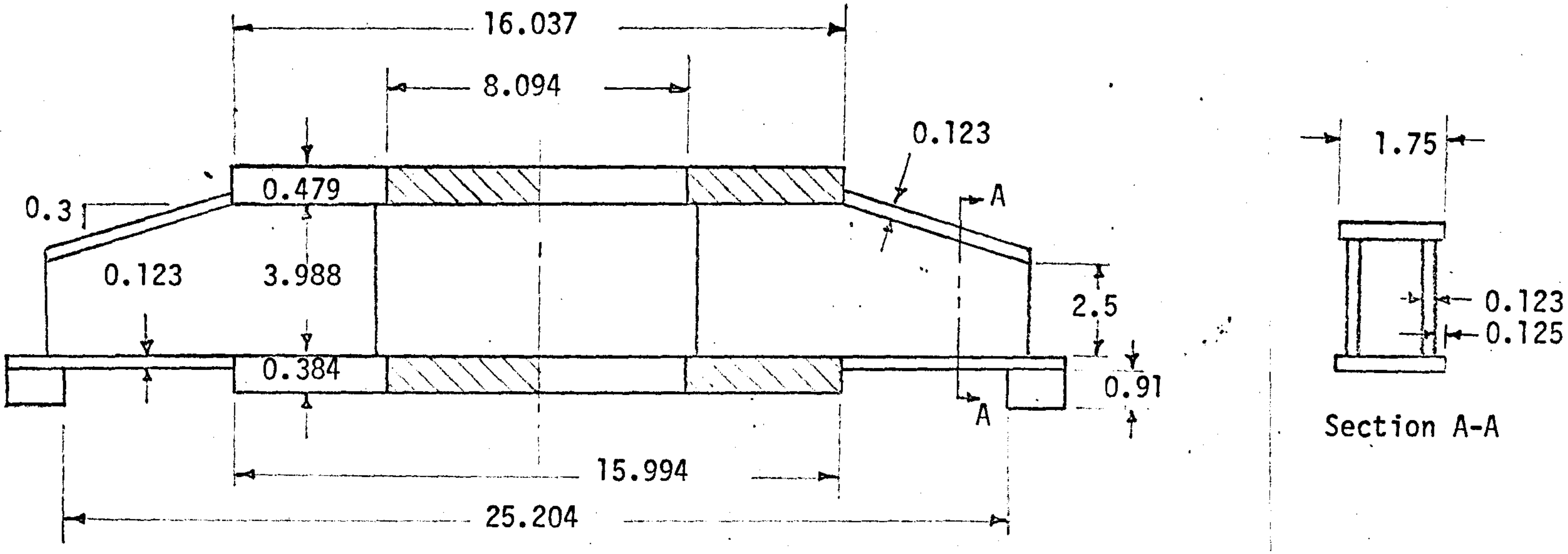

Section A-A

Figure 26. Model Design

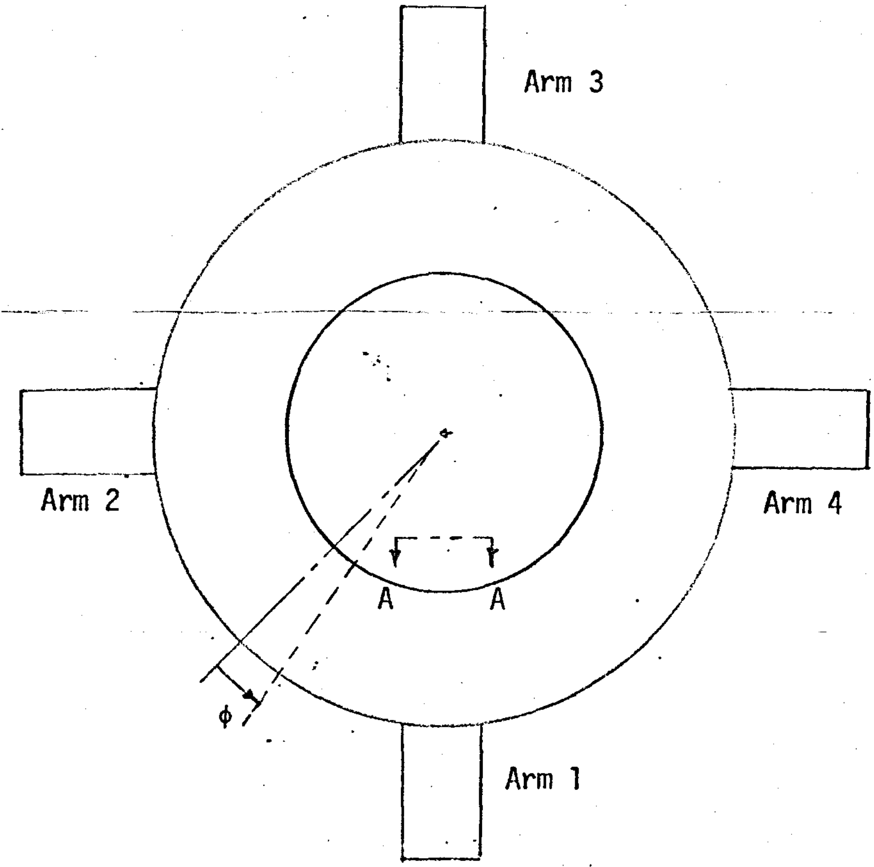

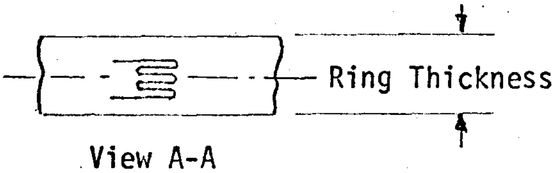

View A-A

Gage 1	Upper Ring	$\phi = 44.1°$
Gage 2	Lower Ring	$\phi = 44.1°$
Gage 3	Lower Ring	$\phi = -3.6°$
Gage 4	Upper Ring	$\phi = -0.9°$

Figure 27. Location of Strain Gages on Rings

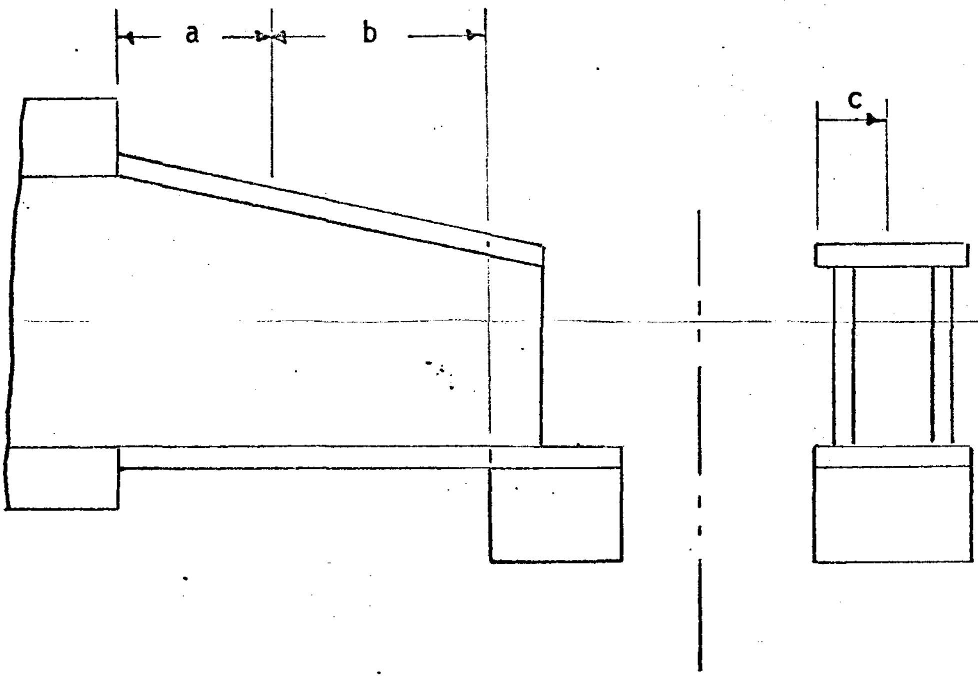

Gage Number	Arm	Upper or Lower Flange	a (inches)	b (inches)	c (inches)
5	1	Lower	1.03	3.65	0.22
6	1	Lower	3.10	1.58	0.24
7	1	Upper	1.06	3.62	0.26
8	1	Upper	3.08	1.60	0.32
9	1	Upper	3.08	1.60	0.84
10	2	Upper	1.09	3.46	0.24

Figure 28. Locations of Strain Gages on Arms

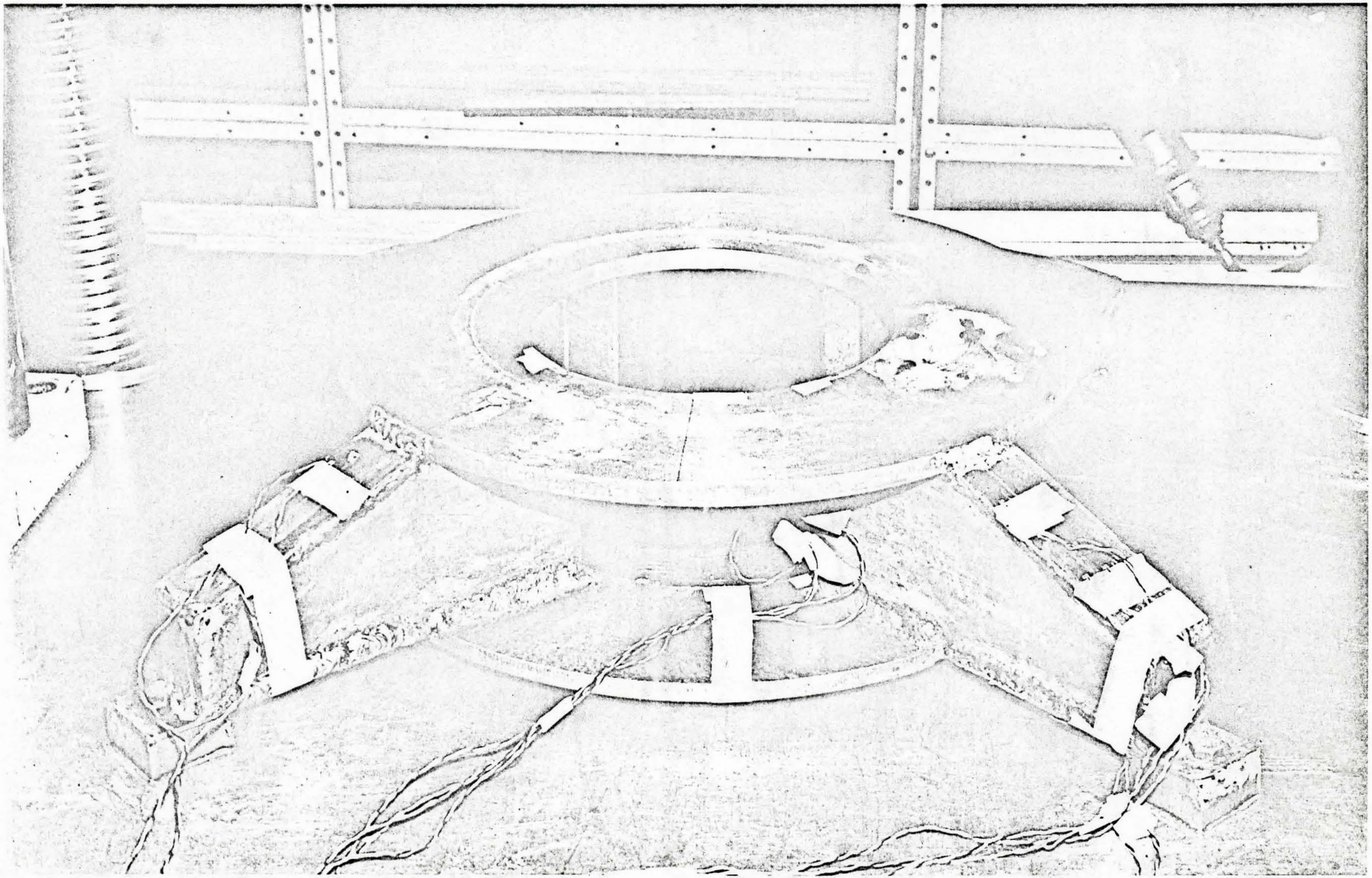

Figure 29. Model

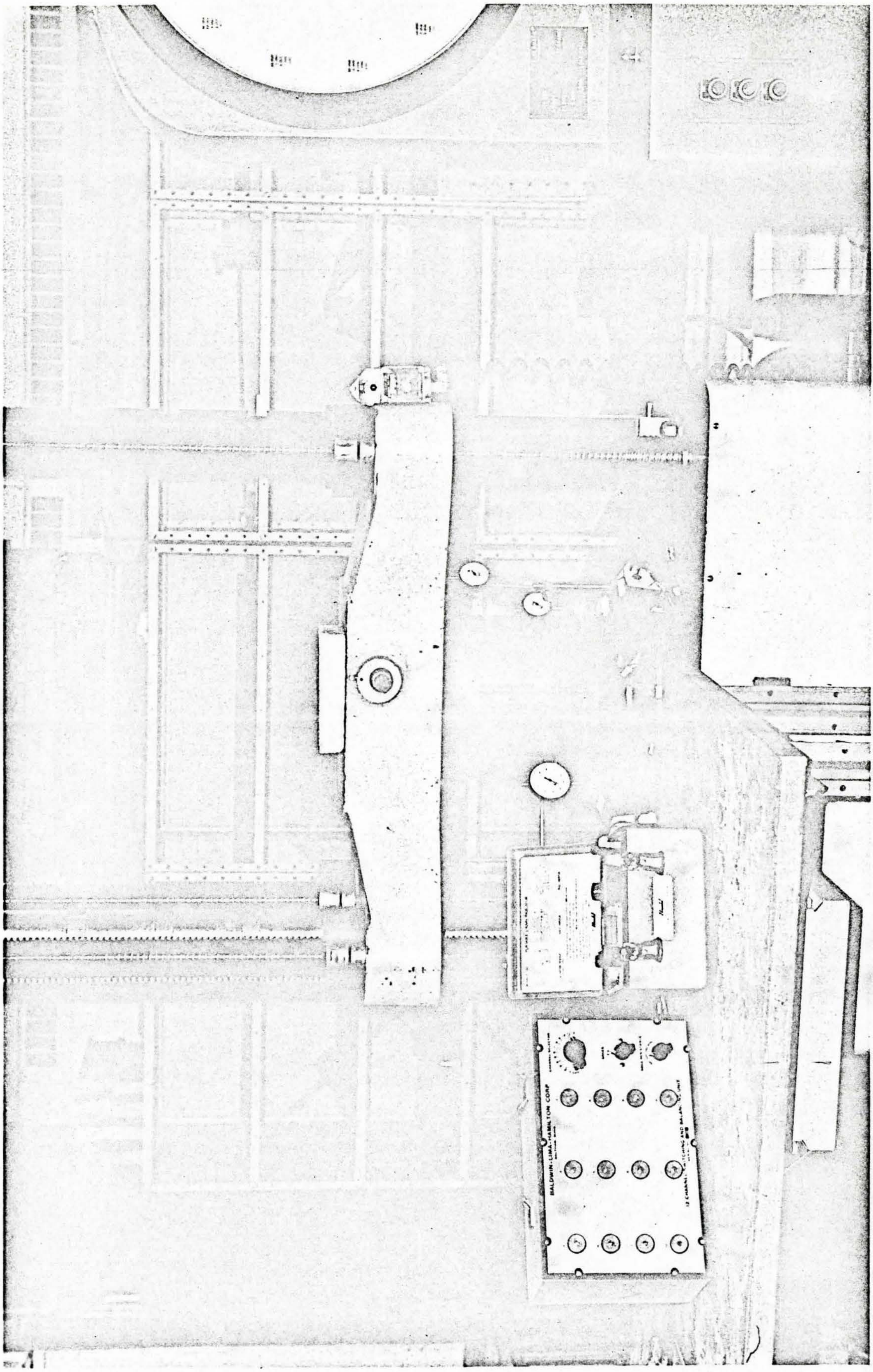

Figure 30. Experimental Set-Up

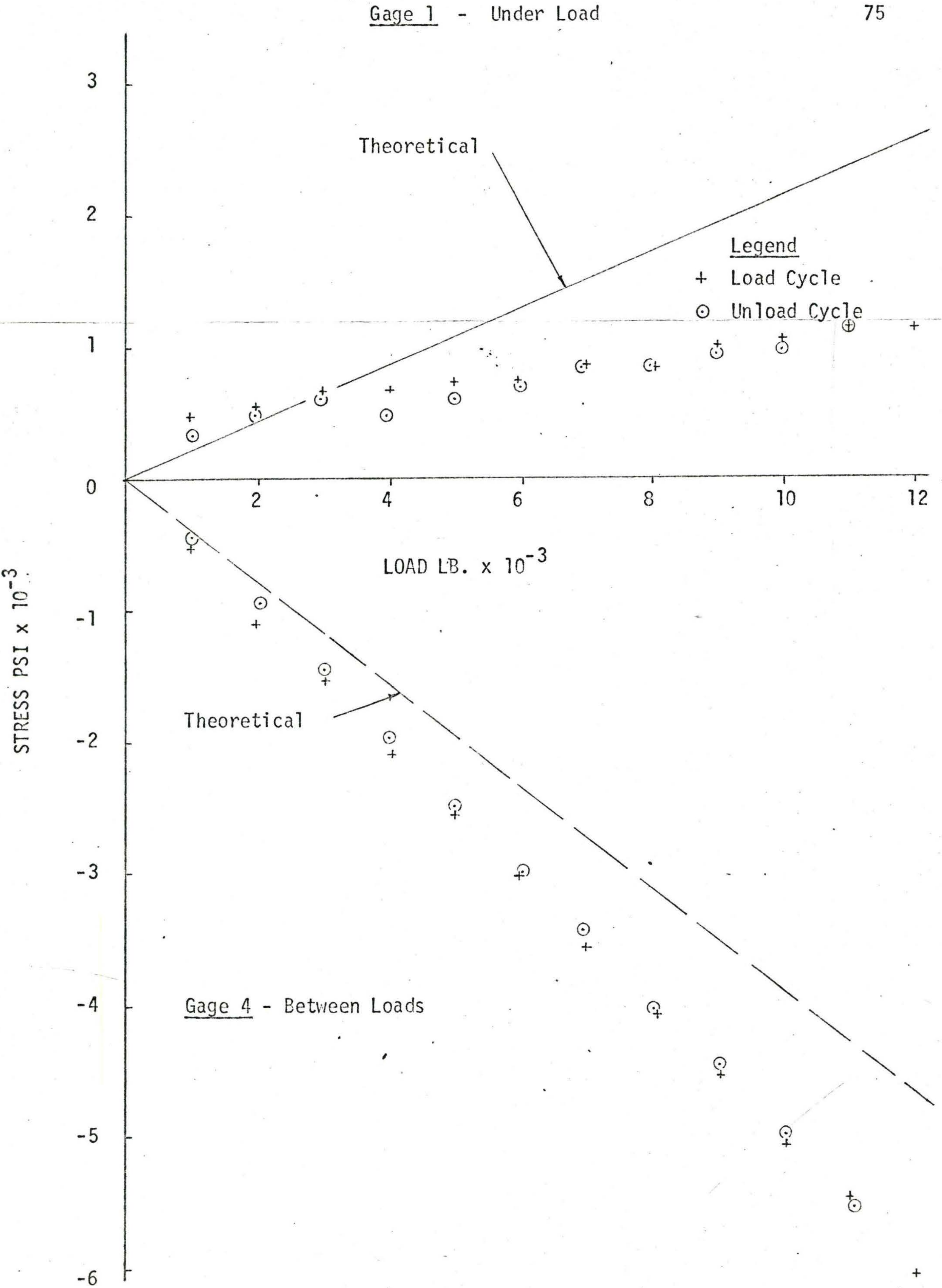

Figure 31. Upper Ring Stresses - Test 13

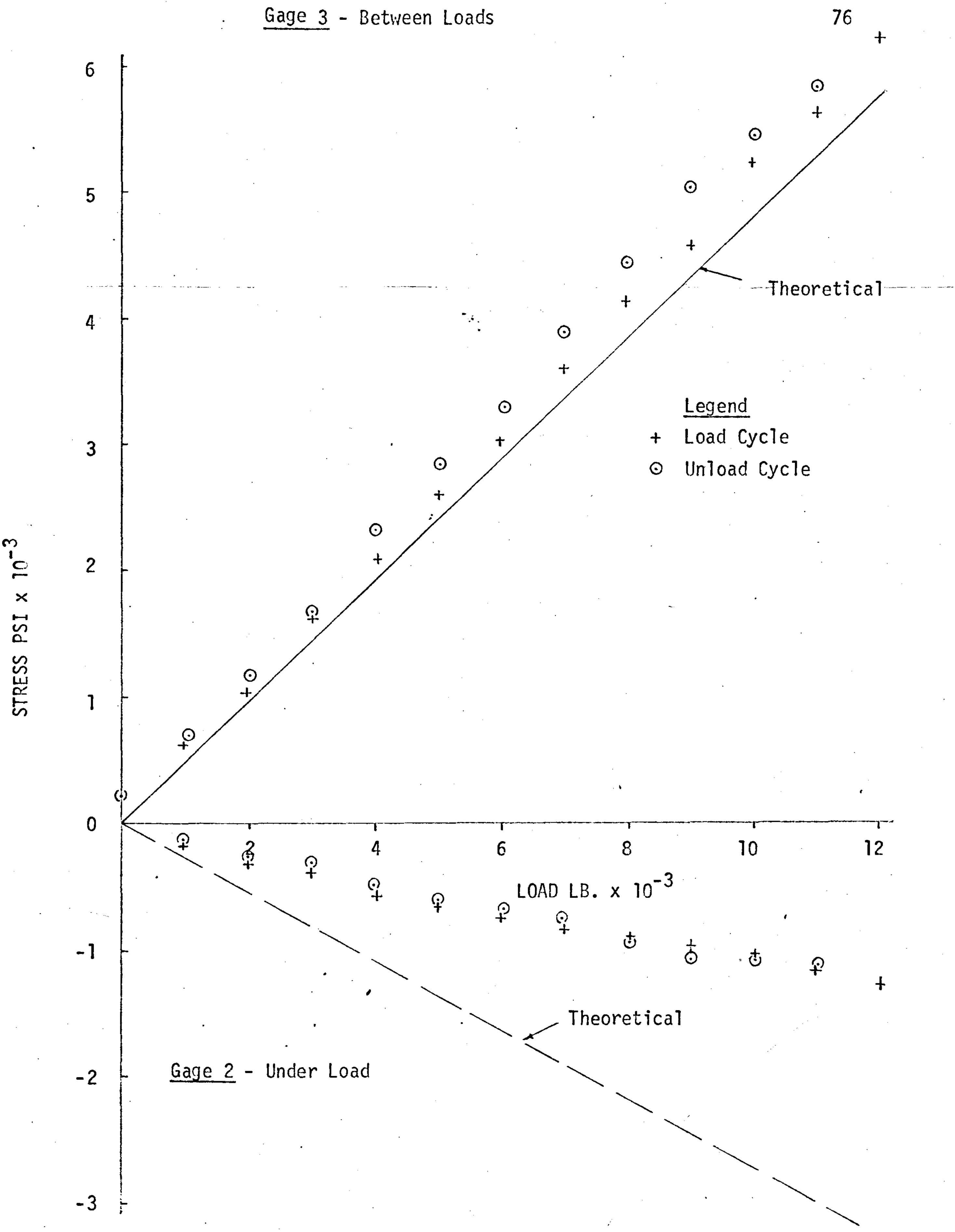

Figure 32. Lower Ring Stresses - Test 13

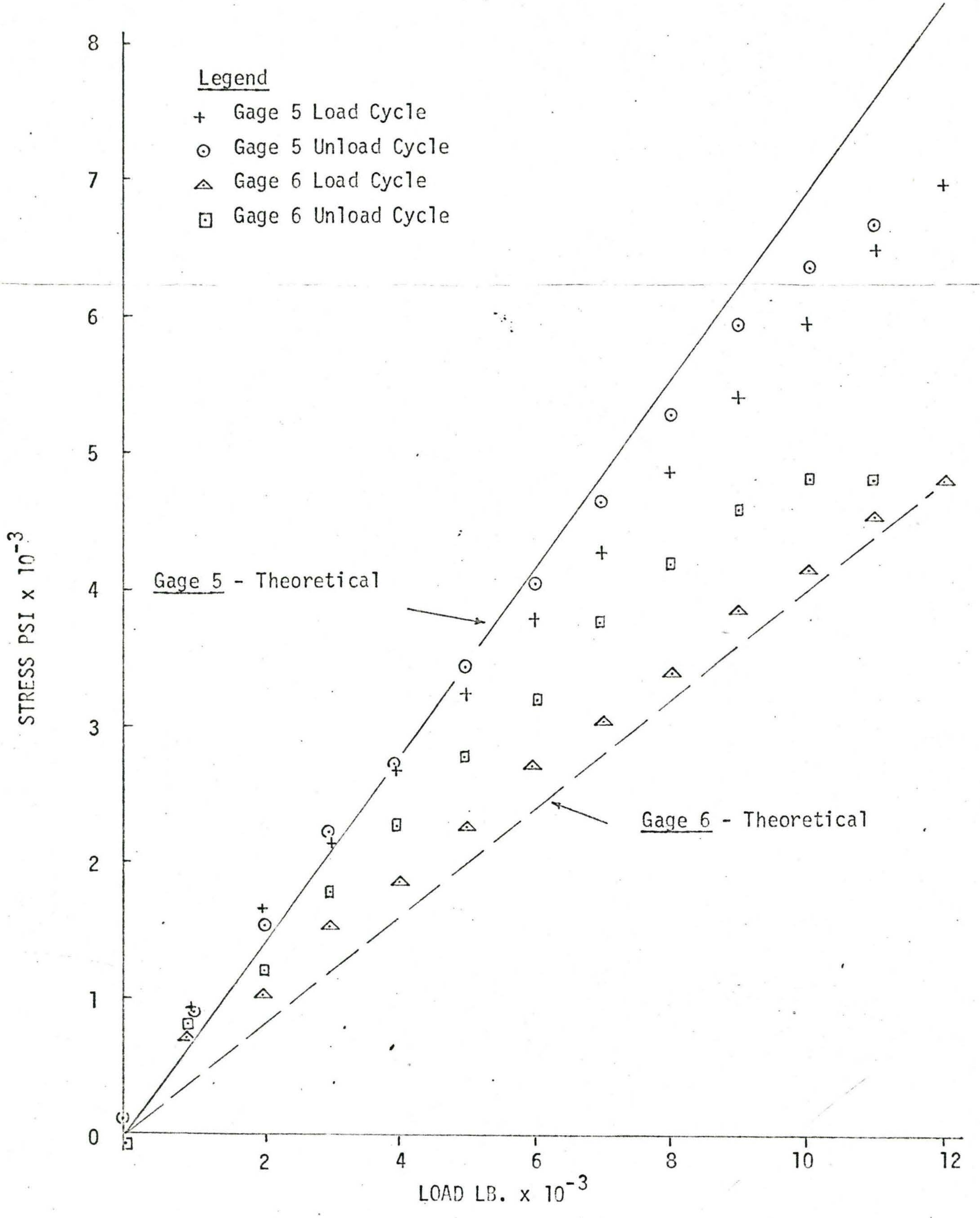

Figure 33. Lower Flange Stresses - Gages 5 and 6
Test 13

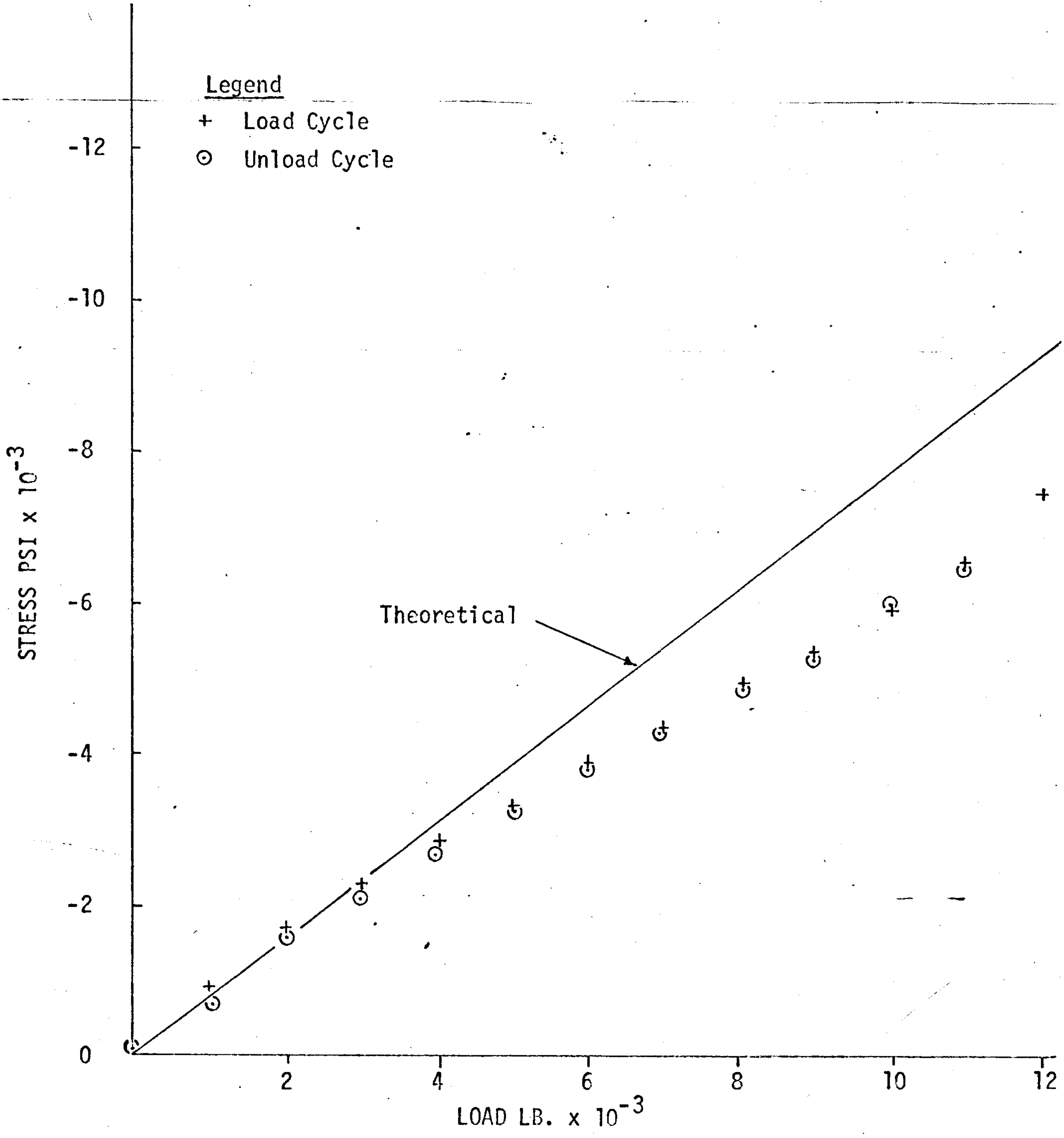

Figure 34. Flange Stress - Gage 7 - Test 13

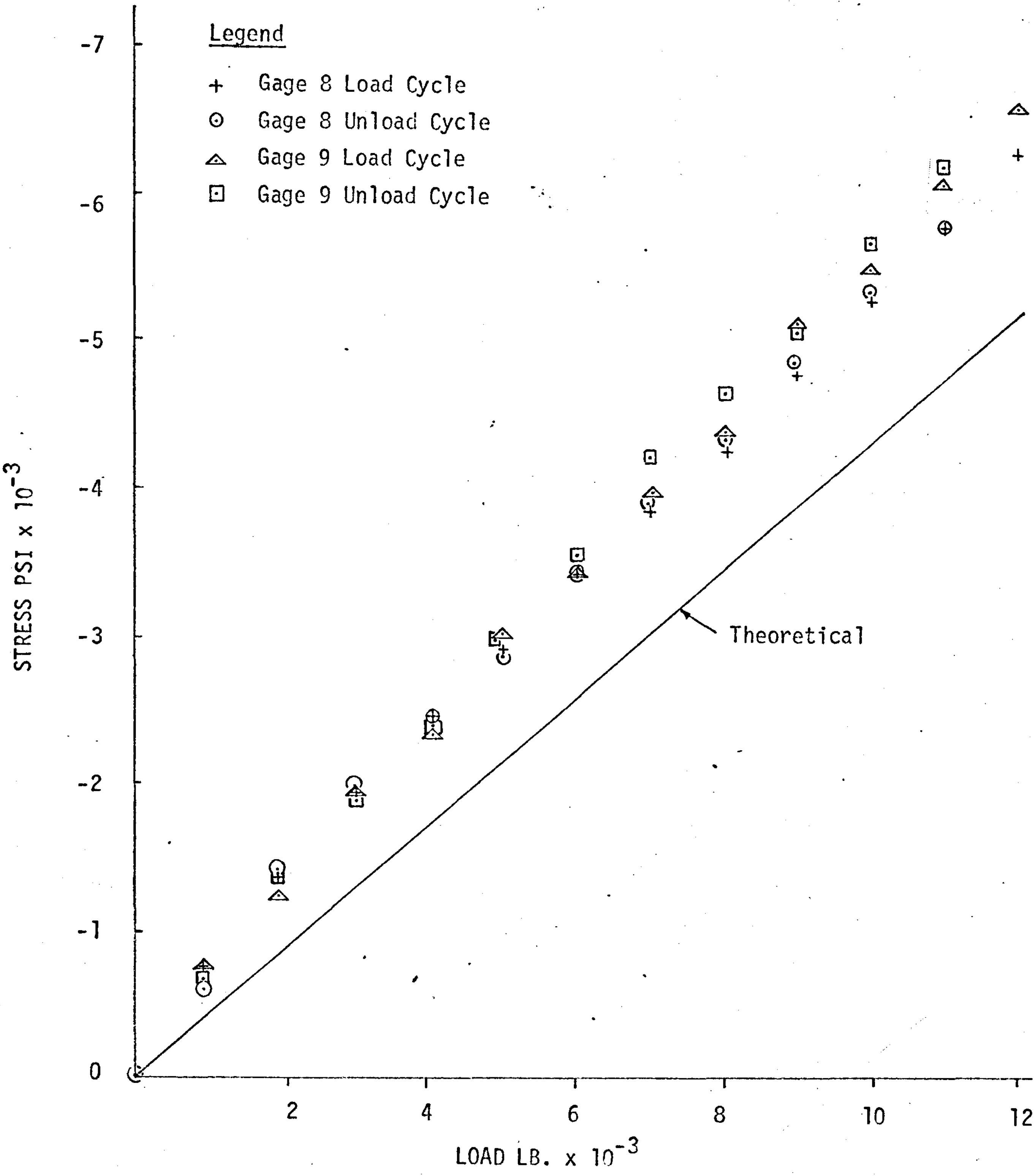

Figure 35. Flange Stresses - Gages 8 and 9 - Test 13

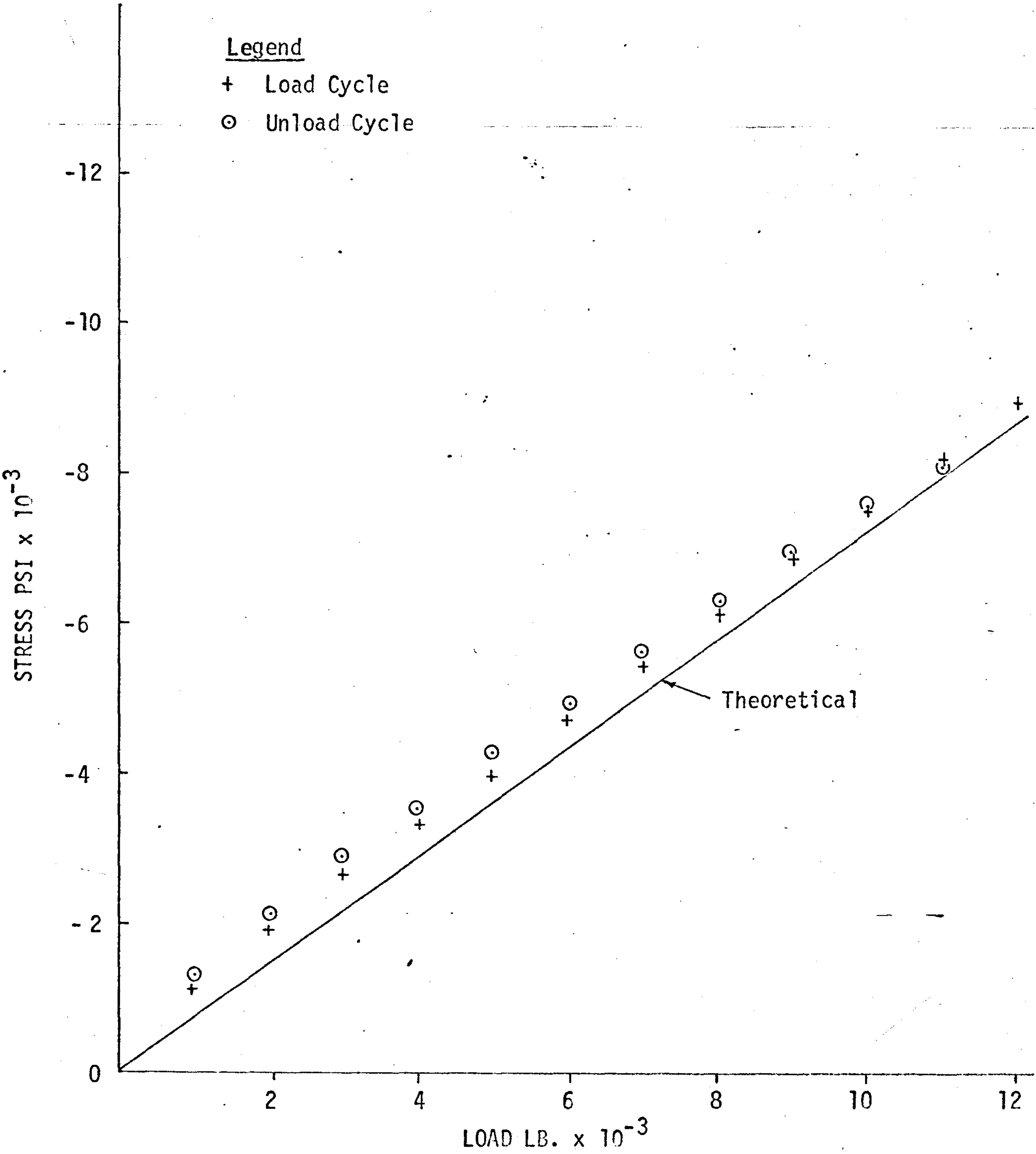

Figure 36. Flange Stress - Gage 10 - Test 13

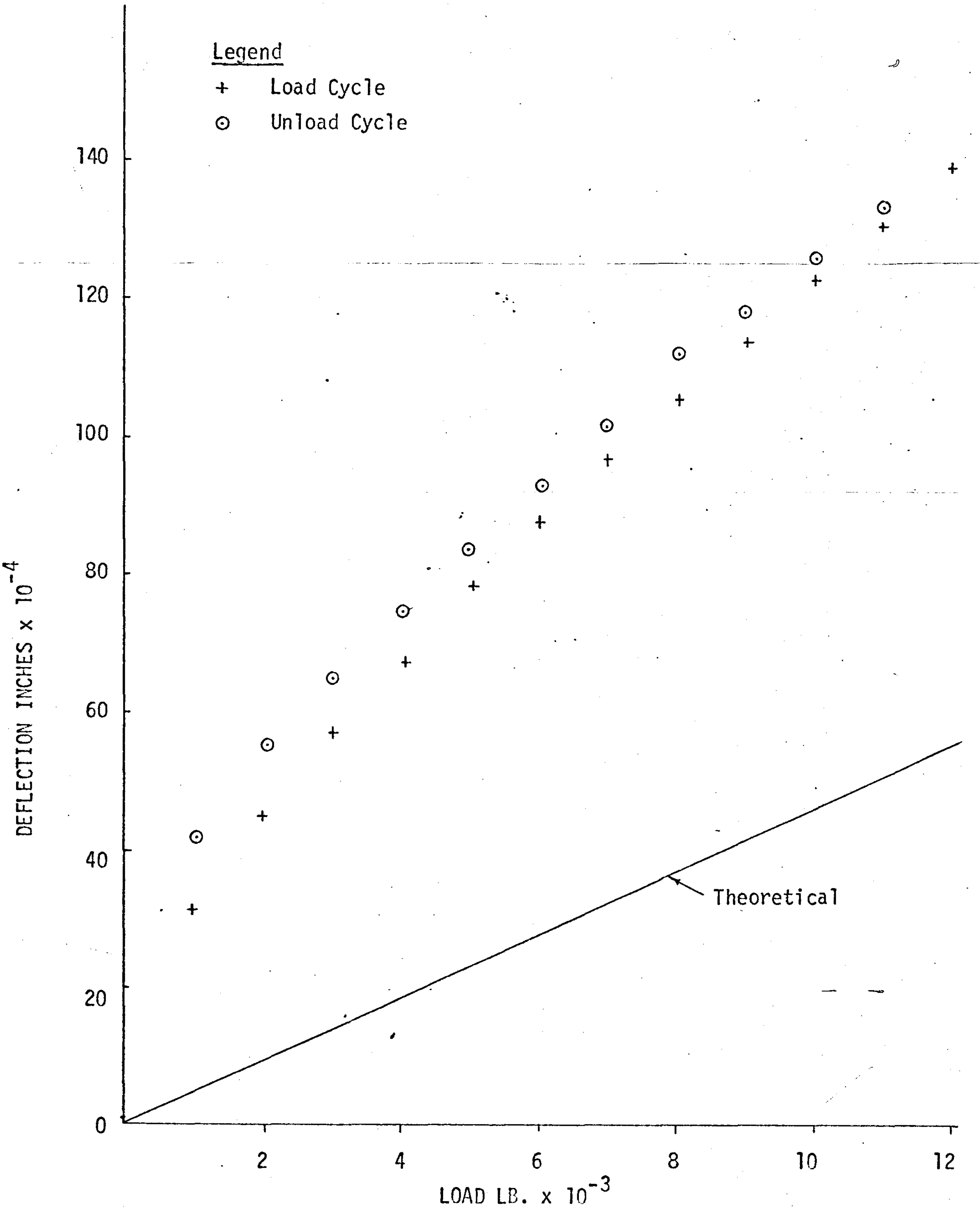

Figure 37. Total Deflection - Test 13

TABLES

TABLE I

OPTIMIZATION RESULTS - DESIGN NO. 1

VARIABLE	STARTING POINTS			DIRECT SEARCH RESULTS			MODIFIED MAP RESULTS		
	#1	#2	#3	#1	#2	#3	#1	#2	#3
OD	157.	180.	200.	159.	196.	185.	132.	132.	132.
TU	4.	2.	6.	2.75	2.125	2.25	3.25	3.25	3.25
TL	3.5	2.	6.	2.5	2.	2.	3.25	3.25	3.25
H	49.5	35.	60.	49.25	52.75	54.	60.	60.	60.
TF	1.5	1.	4.	1.5	1.6875	2.3125	1.75	2.875	2.875
TW	1.5	1.	4.	1.5	1.6875	2.8125	1.	1.	1.
IDL	49.5	64.	75.25	75.25	75.25	75.25	75.25	75.25	75.25
WID	20.	10.	30.	20.	23.	23.	23.75	15.	15.
ALPHA1	0.5	0.2	0.	0.	0.	0.	0.	0.	0.
ALPHA2	0.1	0.8	1.	0.1	0.68	0.99	0.23	0.26	0.26
U	49986.	30879.	143371.	40387.	49369.	57926.	33794.	33907.	33907.

TABLE II

OPTIMIZATION RESULTS - DESIGN NO. 2

VARIABLE	STARTING POINTS			DIRECT SEARCH RESULTS			MODIFIED MAP RESULTS		
	#1	#2	#3	#1	#2	#3	#1	#2	#3
OD	157.	180.	200.	195.	186.	200.	175.	175.	175.
TU	4.	2.	6.	2.75	2.75	2.5	2.875	2.875	2.875
TL	3.5	2.	6.	2.125	2.25	2.	2.25	2.25	2.25
H	49.5	35.	60.	48.75	51.5	56.	58.5	58.5	58.5
TF	1.5	1.	3.	1.625	2.625	2.375	1.875	1.875	1.875
TW	1.5	1.	3.	1.625	2.5625	2.625	1.5	1.5	1.5
IDL	49.5	64.	90.	90.	90.	90.	90.	90.	90.
WID	20.	10.	30.	15.	23.	24.25	15.	15.	15.
ALPHA1	0.5	0.2	0.	0.	0.	0.	0.	0.	0.
ALPHA2	0.1	0.8	1.	0.29	0.75	1.	0.45	0.45	0.45
U	47345.	29230.	123872.	49120.	57468.	62093.	44176.	44176.	44176.

TABLE III

OPTIMIZATION RESULTS - DESIGN NO. 3

VARIABLE	STARTING POINT			DIRECT SEARCH RESULTS			MODIFIED MAP RESULTS		
	#1	#2	#3	#1	#2	#3	#1	#2	#3
OD	135.	240.	66.	127.	137.5	136.5	133.	133.	133.
TU	4.	8.	1.5	3.25	3.125	2.875	3.	3.	3.
TL	4.	10.	1.	2.25	2.25	2.25	2.	2.	2.
H	43.75	4.	0.5	43.375	43.125	43.875	43.75	43.75	43.75
TF	2.	3.5	0.5	1.125	1.5	1.	1.	1.	1.
TW	2.	75.	45.	1.125	1.	1.0625	1.	1.	1.
IDL	54.	60.	35.	68.5	77.	76.5	55.	54.	55.
WID	30.	25.	10.	26.5	16.5	18.75	16.	16.5	15.75
ALPHA1	0.1	0.05	0.	0.24	0.38	0.24	0.21	0.24	0.2
ALPHA2	0.1	0.05	0.2	0.	0.	0.	0.	0.	0.
U	50415.	227571.	-102035.	26990.	26782.	26169.	25213.	25188.	25229.

TABLE IV

NUMBER OF MODIFIED MAP ITERATIONS

DESIGN NUMBER	STARTING POINT	NUMBER OF ITERATIONS	APPROXIMATE RUN TIME (MINUTES)
1	1	20	10.35
	2	17	6.93
	3	46	26.90
2	1	9	4.80
	2	14	7.60
	3	14	7.73
3	1	10	6.62
	2	10	7.15
	3	20	7.53

TABLE V

COMPARISON OF THEORETICAL AND EXPERIMENTAL RESULTS FOR TEST 13. At 12000 LB. LOAD

LOCATION	EXP.	THEOR.	PERCENT DEVIATION	EXP. SLOPE	THEOR. SLOPE
Gage #1	1140 p.s.i.	2585 p.s.i.	-55.9	0.1255	.2158
#2	-1260	-3256	-61.4	-0.1314	-.2718
#3	6210	5795	7.2	0.4992	.4837
#4	-6060	-4621	31.1	-0.5147	-.3857
#5	6960	8309	-16.2	0.6373	.6936
#6	4800	4655	3.1	0.4624	.3886
#7	-7020	-8989	-21.9	-0.6565	-.7503
#8	-6240	-5109	22.1	-0.5768	-.4265
#9	-6570	-5109	28.6	-0.5775	-.4265
#10	-8760	-8621	1.6	-0.8085	-.7196
TOTAL DEFLECTION	0.0138 in.	0.0055 in.	151.0	1.04×10^{-6}	0.46×10^{-6}

APPENDIX

APPENDIX A

RINGS UNDER THE ACTION
EQUALLY SPACED RADIAL
LOADS

RINGS UNDER THE ACTION OF EQUALLY SPACED RADIAL LOADS

P = Radial Load

R = Radius to the gravity centre

r_o = Outside radius of ring

r_i = Inside radius of ring

2α = Angle between two loads

ϕ = Angle between the centreline between loads and any point on the ring

Δ = Distance between neutral axis and the gravity centre of the ring

$$= R - \frac{r_o - r_i}{\ln\left(\frac{r_o}{r_i}\right)}$$

h_1 = Distance from neutral axis to inside radius of ring

$$= R - r_i - \Delta$$

h_2 = Distance from neutral axis to outside radius of ring

$$= r_o - R + \Delta$$

I_{o1} = Moment of Inertia of the ring around axis O1.

a = cross sectional area of the ring

$M\phi$ = Bending moment in the ring at angle ϕ

$= \frac{PR}{2}\left(\frac{1}{\alpha} - \frac{\cos\phi}{\sin\alpha}\right)$. [For thick rings $M\phi = \frac{PR}{2}\left(\frac{1}{\alpha} - \frac{\cos\phi}{\sin\alpha} - \frac{1}{2\alpha} \cdot \frac{\Delta}{R}\right)$]

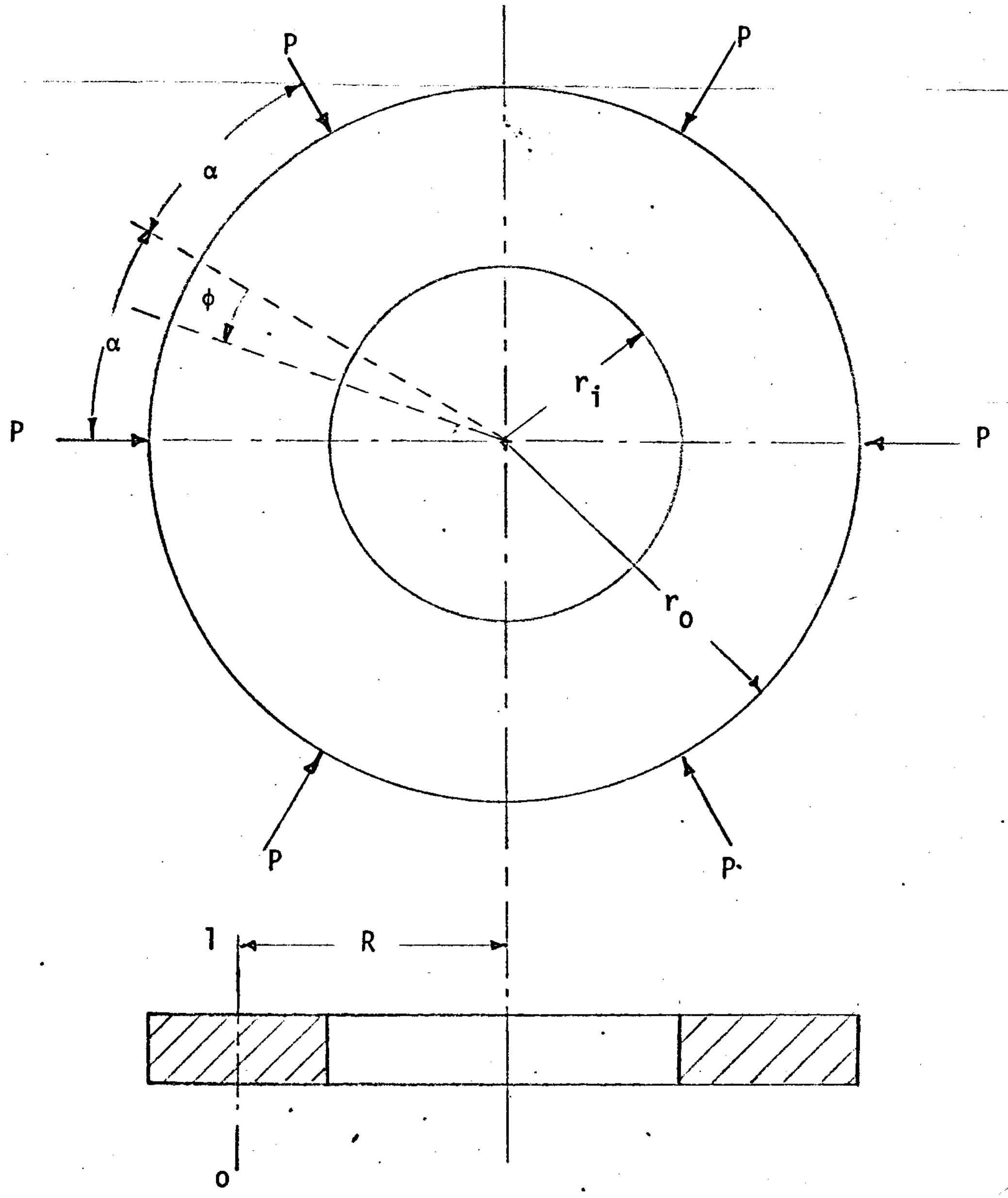
P
P
P
P
P
P
α
α
ϕ
r_i
r_o
R
1
o

M_o = Bending moment half-way between loads (ϕ=o)

= C_1PR [For thick rings $M\alpha = (C_1 - \frac{1}{4\alpha} \cdot \frac{\Delta}{R})PR$.]

M_o = Bending moment half-way between loads (ϕ=o)

= C_2PR [For thick rings $M_o = (C_2 + \frac{1}{4\alpha} \cdot \frac{\Delta}{R})PR$]

$F\phi$ = Normal force at cross section at angle ϕ

= $P \frac{\cos \phi}{2\sin\alpha}$

$F\alpha$ = Normal force at the cross section under the load ($\phi=\alpha$)

= C_3P

F_o = Normal force at the cross section half-way between loads (ϕ=o)

= C_4P

δ_M = Radial deformation under load due to bending

= $C_5 \cdot \frac{PR^3}{EI_{o1}}$ [For thick rings $\delta_M = C_5(1-2\frac{\Delta}{R}) \frac{PR^3}{EI_{o1}}$].

δ_F = Radial deformation under load due to normal forces

= $C_6 \frac{PR}{Ea}$ [For thick rings $\delta_F = (C_6 - \frac{1}{2\alpha} \cdot \frac{\Delta}{R}) \frac{PR}{Ea}$]

δ_S = Radial deformation under load due to shearing forces

= $C_7 K \frac{PR}{Ga}$

where: , G = Modulus of elasticity in shear

$= \frac{E}{2.6}$

K = Factor of stress concentration

$= \frac{aQ_o}{t\ I_{o1}}$ = 1.5 for a rectangular section

δ = Total radial deformation under load

$$= \delta_M + \delta_F + \delta_S$$

$$C_1 = \frac{1}{2}\left(\frac{1}{\alpha} - \frac{\cos\alpha}{\sin\alpha}\right)$$

$$C_2 = \frac{1}{2}\left(\frac{1}{\sin\alpha} - \frac{1}{\alpha}\right)$$

$$C_3 = \frac{1}{2}\,\frac{\cos\alpha}{\sin\alpha}$$

$$C_4 = \frac{1}{2\sin\alpha}$$

$$C_5 = \frac{1}{2\sin^2\alpha}\left(\frac{\sin 2\alpha}{4} + \frac{\alpha}{2}\right) - \frac{1}{2\alpha}$$

$$C_6 = \frac{1}{2\sin^2\alpha}\left(\frac{\sin 2\alpha}{4} + \frac{\alpha}{2}\right)$$

$$C_7 = C_6 - C_3$$

σ_1 = Tensile Stress at the inside diameter

$$= \frac{Mh_1}{a\Delta(R-h_1)} = \frac{Mh_1}{a\Delta r_i}$$

σ_2 = Tensile Stress at the outside diameter

$$= \frac{Mh_2}{a\Delta(R + h_2)} = \frac{Mh_2}{a\Delta r_o}$$

APPENDIX B

DERIVATIONS OF TAPERED BOX BEAM HORIZONTAL SHEAR STRESS AND DEFLECTION FORMULAE

B.1 HORIZONTAL SHEAR STRESS

The following is the derivation of the horizontal shear stress in the webs of a tapered box beam such as that illustrated in Figure 19. This derivation is applicable only to the case where the slopes of the upper and lower flanges are equal, i.e., $\alpha_1 = \alpha_2 = \alpha$. When the derived formula is used, components of the load parallel and perpendicular to the centreline of the beam must be taken if α_1 does not equal α_2.

Inherent in the analysis is the assumption that the bending stress at any section can be adequately represented by the formula:

$$\sigma_x = \frac{My}{I}$$

Derivation

If a section such as that shown below is taken from the beam

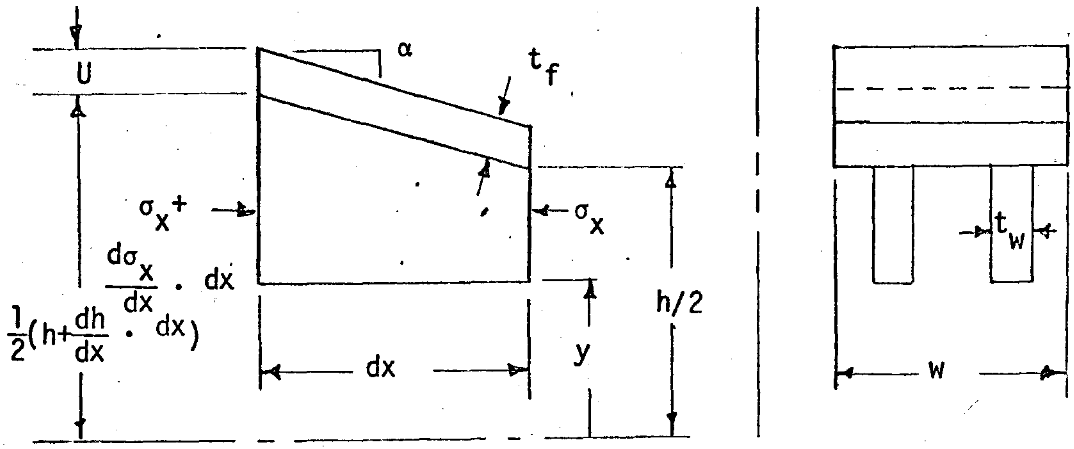

illustrated in Figure 19 at any x, then for equilibrium of the section the sum of integrals of the stresses over their respective areas must be zero.

For equilibrium of the section, then,

$$2\,.\,\zeta_{xy}.tw.dx - \int_{y}^{1/2\,(h+\frac{dh}{dx}.dx)} (\sigma_x + \frac{d\sigma_x}{dx}\,.\,dx)\;2.tw.dy$$

$$-\int_{1/2\,(h+\frac{dh}{dx}\,.dx)}^{1/2(h+\frac{dh}{dx}\,.dx)+u} (\sigma_x + \frac{d\sigma_x}{dx}\,.dx)\;\; wdy + \int_{y}^{1/2h} \sigma_x.2.tw.dy$$

$$+\int_{1/2h}^{1/2h+u} \sigma_x.w.dy = 0$$

Now: $\sigma_x = \frac{Pxy}{I}$

$$\frac{d\sigma_x}{dx}\,.\,dx = \frac{P}{I}\,(\,1 - \frac{x}{I}\,\frac{dI}{dx})\,y.dx$$

$$\frac{dh}{dx}\,.\,dx = 2.\alpha.dx$$

Substituting for σ_x, $\frac{d\sigma_x}{dx}\,.\,dx$, and $\frac{dh}{dx}\,.\,dx$, and integrating,

$$\zeta_{xy}.dx = \frac{P}{2}(\frac{x}{I})\,[y^2\,\Big|_{y}^{1/2\,(h+2\alpha dx)} - y^2\,\Big|_{y}^{1/2h}$$

$$+\;\frac{w}{2tw}\,\{y^2\,\Big|_{1/2(h+2\alpha.dx)}^{1/2(h+2\alpha.dx)+u} - y^2\,\Big|_{1/2h}^{1/2h+u}\;\}]$$

$$+ \frac{P}{2I}\left(1 - \frac{x}{I}\frac{dI}{dx}\right).dx\left[y^2 \Big|_{y}^{1/2(h+2\alpha.dx)} + \frac{w}{2tw} \Big|_{1/2(h+2\alpha.dx)}^{1/2(h+2\alpha.dx)+u}\right]$$

Evaluating

Dividing both sides by dx and neglecting all differential terms,

$$\zeta_{xy} = \frac{P}{2}\left(\frac{x}{I}\right)\left[h.\alpha + \frac{w}{2tw}\{2\alpha.u\}\right]$$

$$+ \frac{P}{2I}\left(1-\frac{x}{I}\frac{dI}{dx}\right)\left[\frac{h^2}{4} - y^2 + \frac{w}{2tw}\{hu + u^2\}\right].$$

Now $2\alpha = \frac{dh}{dx}$,

$$\frac{1}{I}\left(1 - \frac{x}{I}\frac{dI}{dx}\right) = \frac{d}{dx}\left(\frac{x}{I}\right).$$

Hence,

$$\zeta_{xy} = \frac{P}{2}\left(\frac{x}{I}\right)\frac{dh}{dx}\left[\frac{h}{2} + \frac{w.u}{2.tw}\right]$$

$$+ \frac{P}{2}\frac{d}{dx}\left(\frac{x}{I}\right)\left[\left(\frac{h^2}{4} - y^2\right) + \frac{w.u}{2tw}(h+u)\right]$$

If the beam is solid, the preceding formula reduces to that in Section 3.2.2.

B.2 DEFLECTION DUE TO BENDING

In order to find a closed solution for the bending deflection of a tapered box beam, such as that illustrated in Figure 19, two approximations are made. These are:

(1) The area moment of inertia of any section can be represented by the formual:

$$I_1(x) = \frac{1}{12}\{w(h+2t_f)^3 - (w-2t_w)h^3\}$$

This approximation neglects the fact that the cross-sections of the flanges are larger than the material thickness when the flanges are tapered and that the neutral axis of the "negative" moment of inertia is not at the same location as that of the "positive" moment of inertia when the slopes of the two flanges are different.

(2) The area moment of inertia, as given in (1) above, can be approximated by:

$$I_2(x) = \frac{1}{6}.tw(h+t_f)^3 + \frac{1}{2}(w-t_w).t_f(h+t_f)^2$$

The error introduced by approximating $I_1(x)$ with $I_2(x)$ is:

$$E(x) = \frac{I_1(x) - I_2(x)}{I_1(x)} = \frac{{t_f}^2}{6I_1(x)}\{w.t_f+6t_w.h.4t_w.t_f\}$$

Typical dimensions for these beams are:

$w \simeq 20$ inches

$t_w \simeq 1.5$ inches

$t_f \simeq 1.5$ inches

$20 \leq h \leq 60$ inches

For $h = 20$ inches, $E(x) \approx 0.83$ percent

$h = 40$ inches, $E(x) \approx 0.30$ percent

Since the error is generally in the order of 1 percent or less, the effect of the error is small and can be ignored.

Derivation

$$h(x) = h_o + (\alpha_1 + \alpha_2).x$$

$$I(x) = \frac{1}{6}\,[h_o+t_f)+(\alpha_1+\alpha_2).x]^2[t_w(h_o+t_f+\{\alpha_1+\alpha_2\}.x)$$

$$+\ 3(w-tw).t_f]$$

$$I_o = \frac{1}{6}\,[h_o+t_f]^2[t_w(h_o+t_f) + 3(w - tw).t_f]$$

From the above relations, $I(x)$ can be represented a function of I_o, i.e.

$$I(x) = I_o\,[1 + ax]^2[1 + bx],$$

where

$$a = \frac{\alpha_1 + \alpha_2}{h_o + t_f}$$

$$b = \frac{tw(\alpha_1 + \alpha_2)}{t_w(h_o+t_f)+3(w-t_w).t_f}$$

The bending energy stored in the beam is:

$$U = \int_{o}^{\ell} \frac{[M(x)]^{2} ds}{2EI}$$

Since $M(x) = Px$ and $ds = dx$

$$U = \int_{o}^{\ell} \frac{(Px)^{2}}{2EI} dx$$

If the bending deflection of the tip is denoted by δ_b,

$$\delta_b = \frac{\partial U}{\partial P} = \frac{\partial}{\partial P} \int_{o}^{\ell} \frac{(Px)^{2}}{2EI} dx = \int_{o}^{\ell} \frac{Px^{2}}{EI} dx$$

Substituting for $I(x)$ and integrating,

$$\delta_b = \frac{P}{EI_o} \left[\frac{\ell}{a(a-b)(1+a\ell)} + \frac{1}{(b-a)^{2}} \left\{ \frac{1}{b} \ln(1 + b\ell) + \frac{b - 2a}{a^{2}} \ln(1 + a\ell) \right\} \right]$$

B.3 SHEAR DEFLECTIONS

The slope of the deflection curve for a beam due to shear is:

$$\frac{dys}{dx} = \gamma_{xy} = \frac{\tau_{xy}}{G} = \frac{VQ}{ItG},$$

all evaluated at $y = 0$ so as to obtain the slope of the beam centreline. The classical method of obtaining the shear deflection of a beam is to integrate the slope of centreline due to shear along the length of the centreline, i.e.,

$$\delta_v = \int_{o}^{\ell} \frac{dy_s}{dx} \bigg|_{y = o} \cdot dx$$

This approach is used here.

B.3.1 SIMPLE BEAM THEORY

Using the terminology and expressions derived in B.2, a formula for $\frac{VQ}{ItG}$ can be developed.

$$V = P$$

$$t = 2.t_w$$

$$Q(x) = \frac{wid.t_f}{2}(h+t_f) + \frac{1}{4}t_w h^2.$$

The expression for Q(x) as a function of 'a' and 'b' is:

$$Q(x) = \frac{wid.t_f}{2}(h_o+t_f)(1+ax) + \frac{1}{4}t_w(h_o+t_f)^2\left(1+ax-\frac{t_f}{h_o+t_f}\right)^2$$

Hence,

$$\frac{VQ}{ItG} = \frac{P(h_o+t_f)}{4I_o t_w G}\left[\frac{t_w(h_o+t_f)}{2(1+bx)} + \frac{wid\ .\ t_f - t_w t_f}{(1+ax)(1+bx)} + \frac{t_w t_f^2}{2(h_o+t_f)(1+bx)(1+ax)^2}\right]$$

This expression can be integrated to yield a closed solution for the shear deflection.

$$\delta_v = \int_o^{\ell}\left[\frac{VQ}{ItG}\right]_{y=o} .dx$$

$$\delta_v = \frac{P(h_o+t_f)}{4I_o t_w G}\left[\frac{t_w(h_o+t_f)}{2b}\ \ln\{1+b\ell\} - \frac{t_w t_f^2 a\ell}{2(h_o+t_f)(b-a)(1+a\ell)}\right.$$

$$\left. + \frac{1}{b-a}\ \ln\left\{\frac{1+b\ell}{1+a\ell}\right\}\left(wid.t_f - t_w t_f + \left[\frac{b}{b-a}\right]\frac{t_w t_f^2}{2(h_o+t_f)}\right)\right]$$

B.3.2 TAPERED BEAM THEORY

The formula for the shear stress in a tapered box beam derived in B.1 can be divided by G, evaluated at y = o, and integrated along the length of the beam to obtain a shear deflection.

$$\delta_s = \frac{1}{G}\int_o^{\ell} \zeta_{xy}\, dx = \frac{1}{G}\int_o^{\ell} [\frac{P}{2}(\frac{x}{I})\,\frac{dh}{dx}\,\{\frac{h}{2} + \frac{u.w}{2t_w}\}$$

$$+ \frac{P}{2}\,\frac{d}{dx}\,(\frac{x}{I})\{\frac{h^2}{4} + \frac{u.w}{2t_w}\,[h + y]\}]\, dx$$

Substituting $h = h_o + (\alpha_1 + \alpha_2)x$ and $\frac{dh}{dx} = (\alpha_1 + \alpha_2)$

into the preceding equation and integrating by parts,

$$\delta_s = \frac{P}{2G}\,(\frac{x}{I})\,(\frac{2(\alpha_1 + \alpha_2)\,x + (\alpha_1 + \alpha_2)^2 x^2}{4} + \frac{u.w}{2t_w}\,(\alpha_1+\alpha_2)x)\Big|_o^{\ell}$$

$$+ \frac{P}{2G}(\frac{x}{2})(\frac{h_o^2}{4} + \frac{u.w}{2t_w}\,(h_o+u))\Big|_o^{\ell}$$

$$\delta_s = \frac{P}{2G}(\frac{\ell}{I_\ell})([\frac{h_o + (\alpha_1 + \alpha_2)\ell}{2}]^2 + \frac{u.w}{2t_w}\,[h_o + (\alpha_1 + \alpha_2)\ell + u])$$

Since $I_\ell = I_o(1 + a\ell)^2(1 + b\ell)$,

$$\delta_s = \frac{P}{2GI_o}\,(\frac{\ell}{(1+a\ell)^2(1+b\ell)})\{\frac{h_o + (\alpha_1+\alpha_2)\ell}{2}\}^2 + \frac{u.w}{2t_w}\,\{h_o + (\alpha_1+\alpha_2)\ell+u\}).$$

APPENDIX C

COMPARISONS BETWEEN HORIZONTAL SHEAR STRESS IN A TAPERED BOX BEAM FROM SIMPLE BEAM THEORY AND FROM NEW FORMULA

C. COMPARISONS BETWEEN HORIZONTAL SHEAR STRESS IN A TAPERED BOX BEAM FROM SIMPLE BEAM THEORY AND FROM NEW FORMULA

Illustrations on the following two pages show the variation in horizontal sehar stress across sections at x = 0, x = L/2, and x = L as predicted from simple beam theory and from the shear stress formula derived in Appendix B.1. The stresses are for the tapered box cantilever shown below.

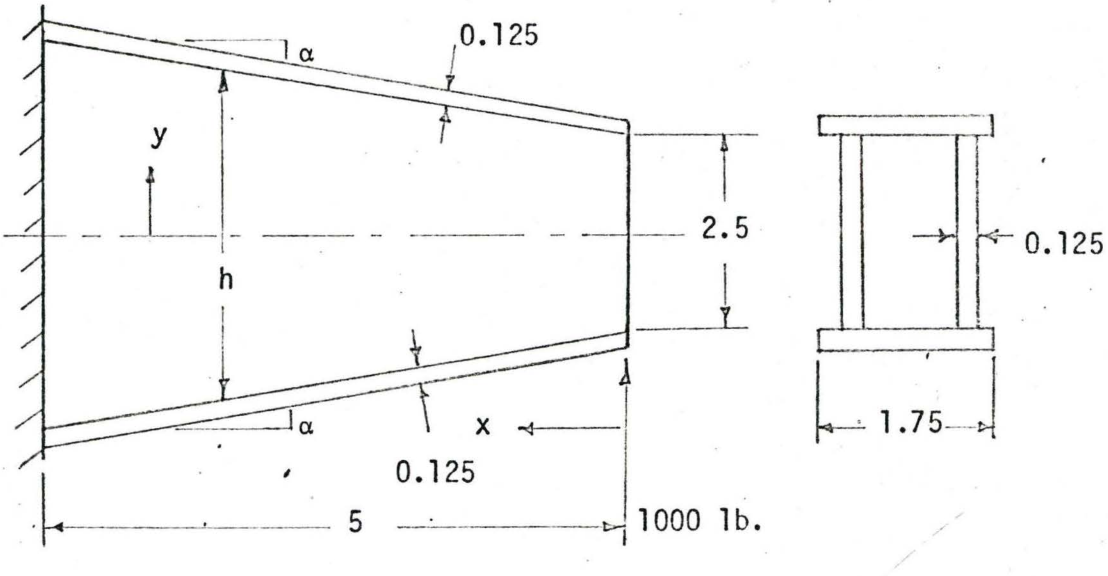

Dimensions Are In Inches

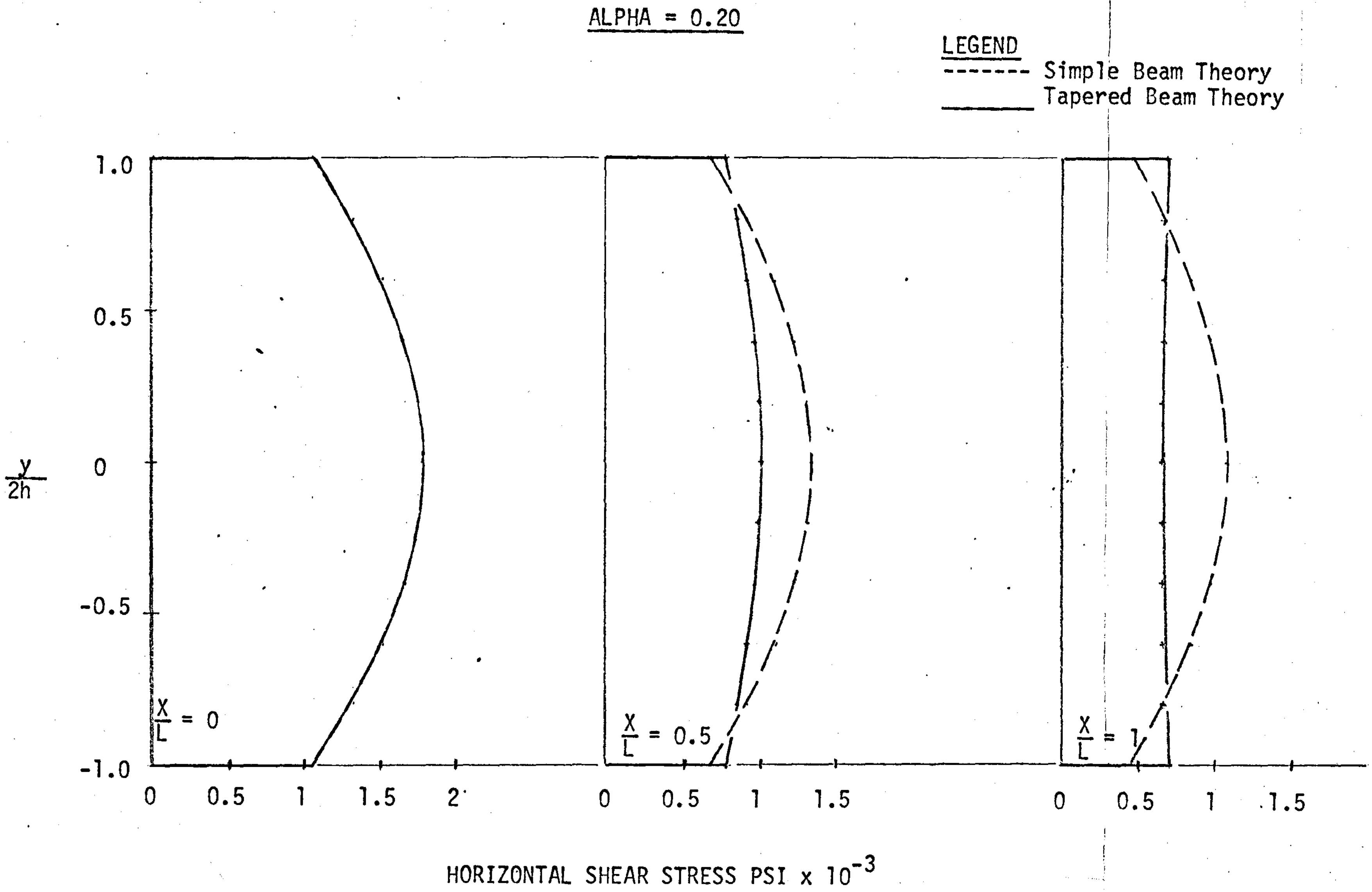
ALPHA = 0.20
LEGEND
------- Simple Beam Theory
_______ Tapered Beam Theory
1.0
0.5
0
-0.5
-1.0
$\frac{y}{2h}$
$\frac{X}{L} = 0$
$\frac{X}{L} = 0.5$
$\frac{X}{L} = 1$
0
0.5
1
1.5
2
0
0.5
1
1.5
0
0.5
1
1.5
HORIZONTAL SHEAR STRESS PSI x 10^{-3}

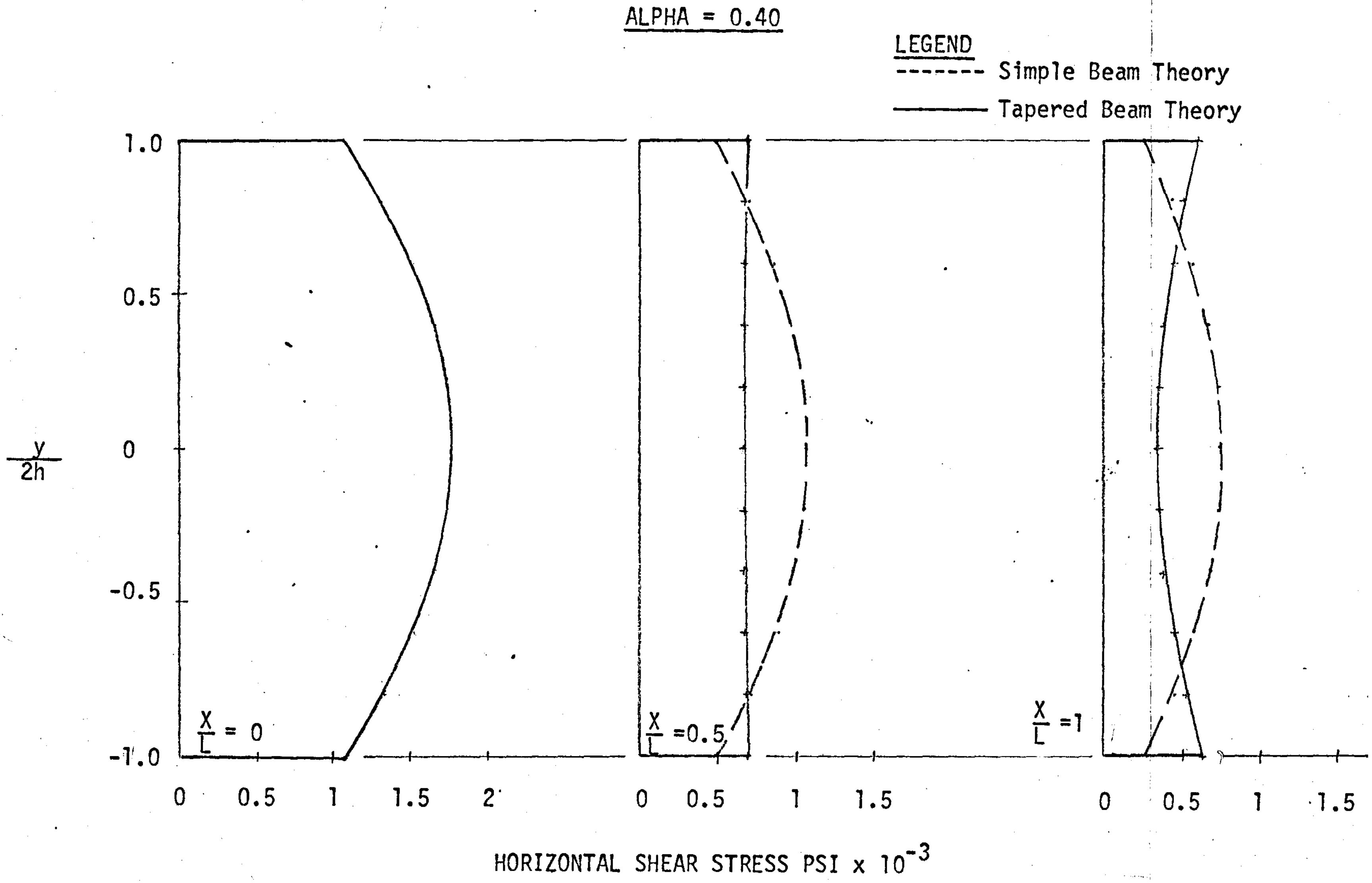
ALPHA = 0.40
LEGEND
Simple Beam Theory
Tapered Beam Theory
1.0
0.5
0
-0.5
-1.0
$\frac{y}{2h}$
$\frac{X}{L}$ = 0
$\frac{X}{L}$ =0.5
$\frac{X}{L}$ =1
0
0.5
1
1.5
2
0
0.5
1
1.5
0
0.5
1
1.5
HORIZONTAL SHEAR STRESS PSI x 10^{-3}

APPENDIX D

COMPARISONS BETWEEN SHEAR AND BENDING DEFLECTIONS FROM NEW FORMULAE AND FROM METHOD OF APPROXIMATING THE BEAM WITH STRAIGHT SECTIONS

```
                                DEFLECTIØN CØMPARISØNS

      ALPHA2 = ALPHA1
      FLANGE THICKNESS=              0.125 IN.
      WEB THICKNESS=                 0.125 IN.
      FLANGE WIDTH=                  1.750 IN.
      LENGTH ØF ARM=                 4.500 IN.
      HEIGHT ØF WEB AT TIP=          2.500 IN.
      TIP LØAD P=                 1000.000 LB.

      D1=INTEGRATED BENDING DEFLECTIØN
      D2=APPRØXIMATED BENDING DEFLECTIØN - 5 STEPS
      D3=APPRØXIMATED BENDING DEFLECTIØN - 50 STEPS
      D4=INTEGRATED SHEAR DEFLECTIØN
      D5=NEW SHEAR DEFLECTIØN
      D6=APPRØXIMATED SHEAR DEFLECTIØN - 5 STEPS
      D7=APPRØXIMATED SHEAR DEFLECTIØN - 50 STEPS

                                DEFLECTIØNS (INCHES)

 ALPHA1          D1           D2           D3           D4           D5           D6           D7

  0.200     0.0003603    0.0003806    0.0003617    0.0005462    0.0004407    0.0005487    0.0005520
  0.190     0.0003747    0.0003947    0.0003760    0.0005517    0.0004485    0.0005540    0.0005571
  0.180     0.0003900    0.0004096    0.0003912    0.0005574    0.0004567    0.0005595    0.0005623
  0.170     0.0004062    0.0004254    0.0004074    0.0005633    0.0004653    0.0005652    0.0005677
  0.160     0.0004234    0.0004422    0.0004245    0.0005693    0.0004742    0.0005710    0.0005733
  0.150     0.0004416    0.0004599    0.0004427    0.0005756    0.0004835    0.0005770    0.0005791
  0.140     0.0004610    0.0004788    0.0004620    0.0005820    0.0004933    0.0005832    0.0005851
  0.130     0.0004817    0.0004988    0.0004826    0.0005886    0.0005035    0.0005897    0.0005914
  0.120     0.0005037    0.0005202    0.0005046    0.0005954    0.0005142    0.0005963    0.0005978
  0.110     0.0005273    0.0005430    0.0005280    0.0006024    0.0005254    0.0006032    0.0006045
  0.100     0.0005525    0.0005673    0.0005531    0.0006097    0.0005372    0.0006104    0.0006115
  0.090     0.0005794    0.0005934    0.0005800    0.0006172    0.0005496    0.0006177    0.0006187
  0.080     0.0006084    0.0006213    0.0006089    0.0006250    0.0005626    0.0006254    0.0006262
  0.070     0.0006395    0.0006512    0.0006399    0.0006331    0.0005764    0.0006334    0.0006340
  0.060     0.0006729    0.0006834    0.0006732    0.0006414    0.0005910    0.0006417    0.0006421
  0.050     0.0007090    0.0007181    0.0007092    0.0006501    0.0006064    0.0006503    0.0006506
  0.040     0.0007481    0.0007556    0.0007481    0.0006591    0.0006227    0.0006592    0.0006594
  0.030     0.0007901    0.0007961    0.0007903    0.0006685    0.0006400    0.0006685    0.0006687
  0.020     0.0008361    0.0008401    0.0008360    0.0006782    0.0006584    0.0006782    0.0006783
  0.010     0.0008807    0.0008879    0.0008857    0.0006884    0.0006780    0.0006884    0.0006884
 -0.000    -0.0000000    0.0009400    0.0009400    0.0000000    0.0006990    0.0006990    0.0006990
```

```
                                        DEFLECTIØN CØMPARISØNS

      ALPHA2 = ALPHA1
      FLANGE THICKNESS=              2.000 IN.
      WEB THICKNESS=                 2.000 IN.
      FLANGE WIDTH=                 20.000 IN.
      LENGTH ØF ARM=                60.000 IN.
      HEIGHT ØF WEB AT TIP=         25.000 IN.
      TIP LØAD P=                10000.000 LB.

      D1=INTEGRATED BENDING DEFLECTIØN
      D2=APPRØXIMATED BENDING DEFLECTIØN - 5 STEPS
      D3=APPRØXIMATED BENDING DEFLECTIØN - 50 STEPS
      D4=INTEGRATED SHEAR DEFLECTIØN
      D5=NEW SHEAR DEFLECTIØN
      D6=APPRØXIMATED SHEAR DEFLECTIØN - 5 STEPS
      D7=APPRØXIMATED SHEAR DEFLECTIØN - 50 STEPS

                                        DEFLECTIØNS (INCHES)

  ALPHA1          D1           D2           D3           D4           D5           D6           D7

   0.200     0.0003783    0.0004056    0.0003801    0.0004154    0.0003201    0.0004163    0.0004201
   0.190     0.0003960    0.0004232    0.0003978    0.0004204    0.0003268    0.0004212    0.0004247
   0.180     0.0004150    0.0004419    0.0004167    0.0004256    0.0003338    0.0004263    0.0004295
   0.170     0.0004354    0.0004619    0.0004370    0.0004309    0.0003411    0.0004315    0.0004345
   0.160     0.0004572    0.0004834    0.0004587    0.0004364    0.0003489    0.0004369    0.0004397
   0.150     0.0004806    0.0005063    0.0004820    0.0004421    0.0003570    0.0004426    0.0004450
   0.140     0.0005058    0.0005310    0.0005071    0.0004480    0.0003655    0.0004484    0.0004506
   0.130     0.0005330    0.0005575    0.0005342    0.0004542    0.0003746    0.0004545    0.0004565
   0.120     0.0005624    0.0005860    0.0005634    0.0004605    0.0003841    0.0004608    0.0004625
   0.110     0.0005941    0.0006169    0.0005951    0.0004672    0.0003942    0.0004673    0.0004689
   0.100     0.0006286    0.0006503    0.0006293    0.0004741    0.0004049    0.0004742    0.0004755
   0.090     0.0006660    0.0006865    0.0006666    0.0004812    0.0004163    0.0004813    0.0004824
   0.080     0.0007067    0.0007258    0.0007072    0.0004887    0.0004284    0.0004888    0.0004897
   0.070     0.0007512    0.0007687    0.0007515    0.0004965    0.0004413    0.0004966    0.0004973
   0.060     0.0007999    0.0008157    0.0008000    0.0005047    0.0004551    0.0005047    0.0005053
   0.050     0.0008534    0.0008671    0.0008533    0.0005132    0.0004698    0.0005132    0.0005137
   0.040     0.0009123    0.0009237    0.0009119    0.0005222    0.0004857    0.0005222    0.0005225
   0.030     0.0009773    0.0009861    0.0009767    0.0005316    0.0005028    0.0005316    0.0005318
   0.020     0.0010495    0.0010552    0.0010486    0.0005415    0.0005213    0.0005415    0.0005416
   0.010     0.0011270    0.0011320    0.0011285    0.0005520    0.0005413    0.0005520    0.0005520
  -0.000    -0.0000000    0.0012178    0.0012178    0.0000000    0.0005630    0.0005630    0.0005630
```

APPENDIX E

DERIVATION OF CRITICAL BUCKLING LOAD
FOR A
RADIALLY LOADED COMPRESSION RING

The following is the derivation of the critical buckling load for a ring loaded radially in compression by n equal loads of magnitude P located symmetrically around the ring and in the plane of the ring.

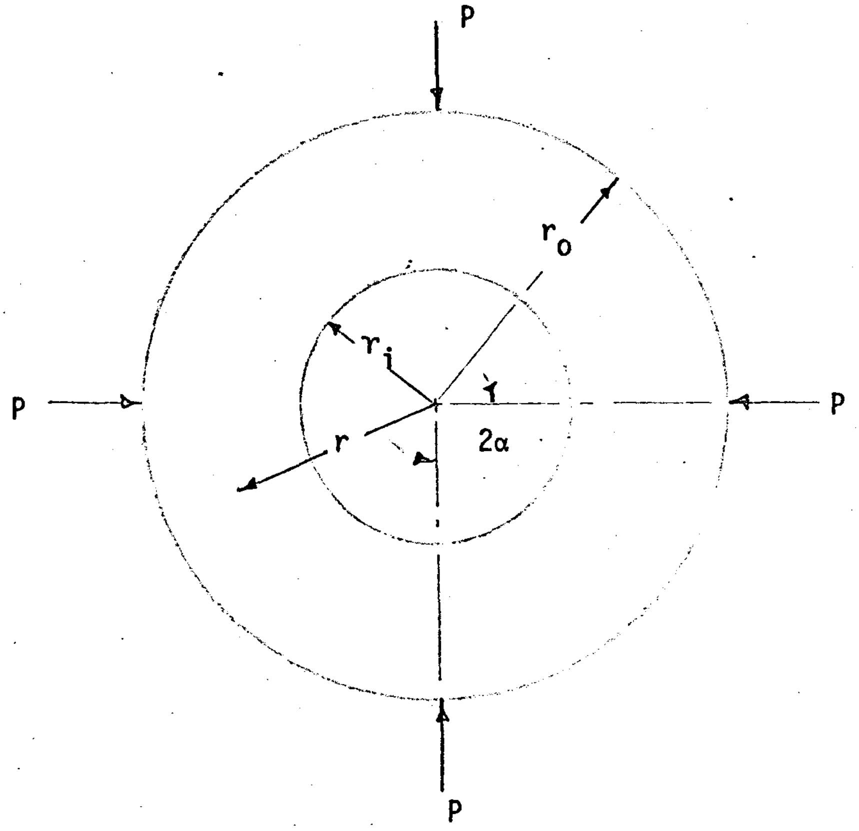

The ring thickness is t.

If there are n loads of magnitude P, $\alpha = \frac{\pi}{n}$

Supports

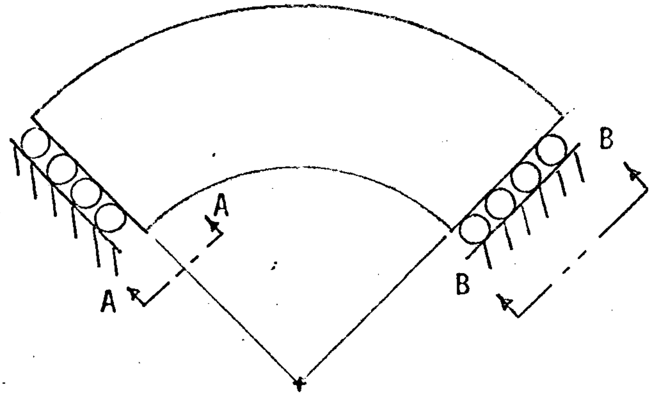

Plan

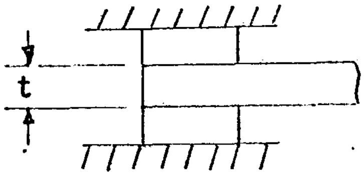

View A-A

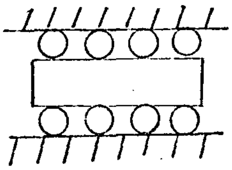

View B-B

Assumptions

(1) Buckling is inextensional.

(2) When the ring segment between supports buckles, the load P moves inward radially, but the ends of segment do not rotate about any axes.

Coordinate System

In order to facilitate the analysis, the following coordinate system is created.

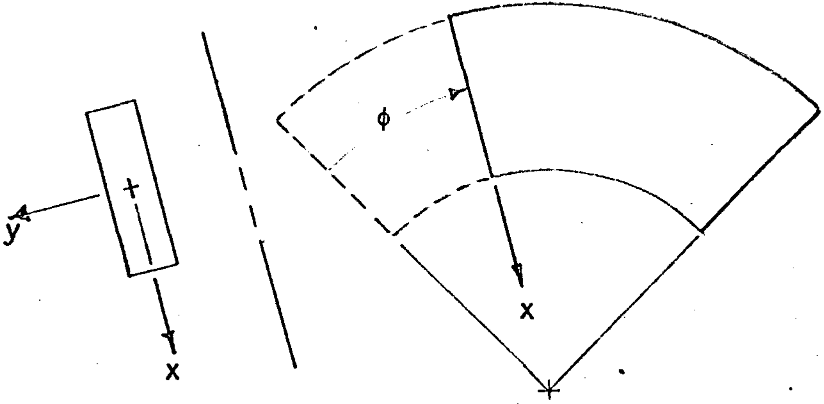

The x-y axes are defined at any cross-section at an angle ϕ as shown above.

A deflection of the centreline 'v' and a rotation of the cross-section about the centreline 'β' are positive in the directions shown below.

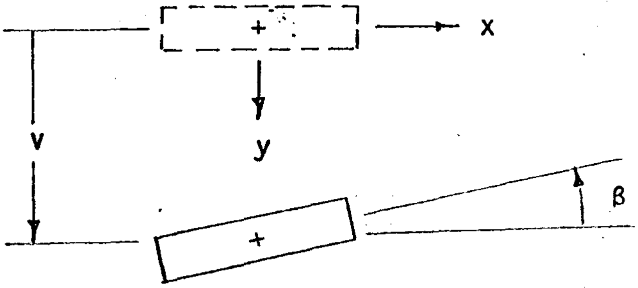

Rigidities

The bending rigidity of the strip about the x axis is B_1 and the torsional rigidity of the strip is C.

$$h = r_o - r_i$$

$$B_1 = \frac{1}{12} h t^3 E$$

$$C = \frac{ht^3}{3} \{1 - 0.630 \frac{t}{h}\} G$$

Analysis

When the segment buckles, both the inside and outside radii of the segment change by the same amount Δr, as shown on the following page:

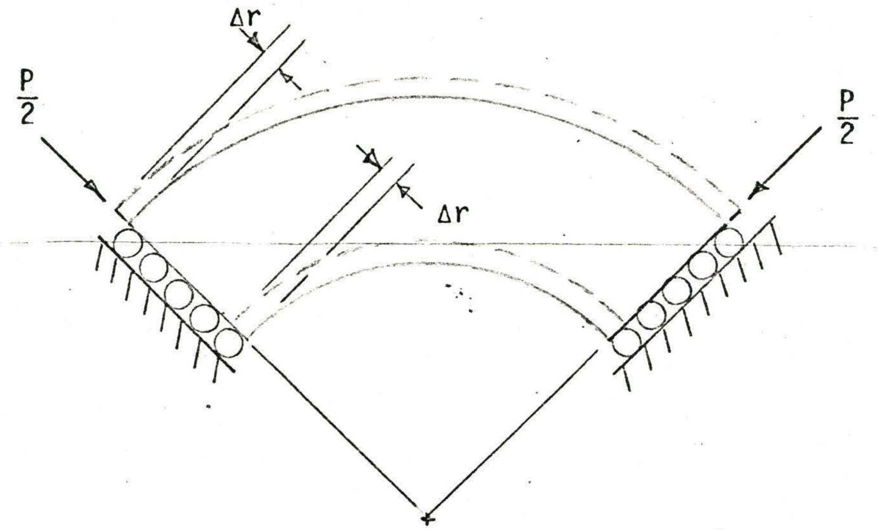

The length of the centreline after buckling is the same as it was before.

The initial arc length of the centreline is

$$S = 2\int_0^\alpha r\,d\phi$$

The arc length after buckling is

$$S = 2\int_0^\alpha (r - \Delta r)\{1 + (\frac{dv}{(r - \Delta r)d\phi})^2\}^{1/2} d\phi$$

For small deflections,

$$\{ 1 + (\frac{dv}{(r - \Delta r)d\phi})^2\}^{1/2} \simeq 1 + \frac{1}{2} (\frac{dv}{(r - \Delta r)d\phi})^2$$

Using this approximation and equating the arc lengths before and after buckling,

$$2r\alpha = 2(r - \Delta r)\alpha + \frac{1}{(r-\Delta r)}\int_0^\alpha (\frac{dv}{d\phi})^2 d\phi$$

which reduces to:

$$\Delta r = \frac{1}{2\alpha r}\int_0^\alpha \left(\frac{dv}{d\phi}\right)^2 d\phi.$$

The deflection of the outside edge of the ring segment is v_0, where:

$$v_0 = v + \frac{h}{2}\beta.$$

Also,

$$\frac{dv_0}{d\phi} = \frac{dv}{d\phi} + \frac{h}{2}\ \frac{d\beta}{d\phi}$$

Since Δr is the same for both r_0 and r,

$$\frac{dv_0}{d\phi} = \sqrt{\frac{r_0}{r}}\ \frac{dv}{d\phi}\ ,$$

hence

$$\frac{d\beta}{d\phi} = \left(\sqrt{\frac{r_0}{r}} - 1\right) \frac{dv}{d\phi}\ .$$

When the loads P are applied to the ring and it buckles, the loads do a certain amount of work on the ring and increase its strain energy.

The work done is $\Delta W = P\Delta r$, and the increase in strain energy is ΔE, where

$$\Delta E = B_1\int_0^{\frac{S}{2}} \left(\frac{d^2v}{ds^2}\right)^2 ds + C\int_0^{\frac{S}{2}} \left(\frac{d\beta}{ds}\right)^2 ds$$

$$\Delta E = \frac{B_1}{r^3}\int_o^\alpha \left(\frac{d^2v}{d\phi^2}\right)^2 d\phi + \frac{C}{r}\int_o^\alpha \left(\frac{d\beta}{d\phi}\right)^2 d\phi$$

$$P \cdot \frac{1}{2\alpha r}\int_o^\alpha \left(\frac{dv}{d\phi}\right)^2 dv = \frac{B_1}{r^3}\int_o^\alpha \left(\frac{d^2v}{d\phi^2}\right)^2 d\phi + \frac{C}{r}\left(\sqrt{\frac{r_o}{r}} - 1\right)^2 \int_o^\alpha \left(\frac{dv}{d\phi}\right)^2 d\phi$$

$$P = \frac{2\alpha}{r^2}\left[\frac{\frac{B_1}{r}\int_o^\alpha \left(\frac{d^2v}{d\phi^2}\right)^2 d\phi}{\int_o^\alpha \left(\frac{dv}{d\phi}\right)^2 d\phi} + C\left(\sqrt{r_o} - \sqrt{r}\right)^2\right]$$

Suppose that the ring segment buckles into a shape which can be described by the following equation:

$$v = \sum_{n=1}^{\infty} a_n(1-\cos[2n-1]\tfrac{\pi}{\alpha}\phi).$$

Then,

$$\frac{dv}{d\phi} = \sum_{n=1}^{\infty} a_n[2n-1]\,\frac{\pi}{\alpha}\,\sin\,[2n-1]\,\frac{\pi}{\alpha}\phi,$$

and

$$\frac{d^2v}{d_\phi^{\ 2}} = \sum_{n=1}^{\infty} a_n[2n-1]^2\left(\frac{\pi}{\alpha}\right)^2 \cos\,[2n-1]\,\frac{\pi}{\alpha}\phi.$$

If $\frac{dv}{d\phi}$ is squared, the result is a series of squares of the form

$$a_n^{\ 2}[2n-1]^2\ \left(\frac{\pi}{\alpha}\right)^2\ \sin^2[2n-1]\ \frac{\pi}{\alpha}\phi$$

and cross-products $a_m a_n[2n-1][2m-1]\left(\frac{\pi}{\alpha}\right)^2\sin[2n-1]\frac{\pi}{\alpha}\phi\ \sin[2m-1]\frac{\pi}{\alpha}\phi$

Integration of the cross-products between 0 and α would give a zero result, hence, for the purpose at hand,

$$\int_o^\alpha \left(\frac{dv}{d\phi}\right)^2 d\phi = \int_o^\alpha \sum_{n=1}^{\infty} a_n^{\ 2}[2n-1]^2\left(\frac{\pi}{\alpha}\right)^2\sin^2[2n-1]\ \frac{\pi}{\alpha}\ \phi\ d\phi$$

Similarly, $\int_{o}^{\alpha} (\frac{d^2v}{d\phi^2})^2 \, d\phi = \sum_{n=1}^{\infty} a_n^2[2n-1]^4 (\frac{\pi}{\alpha})^4 \frac{\alpha}{2}$

Hence,

$$P = \frac{2\alpha}{r^2} \left[\frac{B_1}{r} \frac{\sum_{n=1}^{\infty} a_n^2 \, [2n-1]^4 (\frac{\pi}{\alpha})^4}{\sum_{n=1}^{\infty} a_n^2 [2n-1]^2 (\frac{\pi}{\alpha})^2} + C \, (\sqrt{r_o} - \sqrt{r})^2 \right]$$

For any real a_n, the product $(a_n)^2$ will be positive, hence P_{min} will occur where n=1

$$P_{cr} = \frac{2\alpha}{r^2} [\frac{B_1}{r} (\frac{\pi}{\alpha})^2 + C(\sqrt{r_o} - \sqrt{r})^2]$$

Similarly, if a sine series is chosen as the mode shape for the buckling ring,

$$P_{cr} = \frac{2\alpha}{r^2} [\frac{B_1}{r} (\frac{\pi}{2\alpha})^2 + C(\sqrt{r_o} - \sqrt{r})^2].$$

This latter equation was used in the optimization programmes. The difference between the two is relatively small since the right hand expression within the braces is generally much larger than that on the left.

APPENDIX F

DIRECT SEARCH RESULTS

F.1

DESIGN 1

```
                    CØNSTANT PARAMETERS

NUMBER ØF ARMS..........................             4
PØISSØN'S RATIØ.........................             0.300
NØRMAL FACTØR ØF SAFETY.................             3.000
EMERGENCY FACTØR ØF SAFETY..............             1.500
INTERNAL DIAMETER ØF UPPER RING.........            75.250IN.
DISTANCE FRØM LINE ØF ACTIØN ØF FSC TØ
     PLANE ØF SUPPØRTS..................            82.000IN.
DIAMETER ØVER SUPPØRT PØINTS............           253.500IN.
TURBINE ØVERSPEED.......................           280.000RPM
PLATE YIELD STRENGTH....................         35000.000PSI
HYDRAULIC THRUST........................        742000.000LB.
MAXIMUM STATIC LØAD.....................        950000.000LB.
SHØRT CIRCUIT FØRCE.....................       1180000.000LB.
MØDULUS ØF ELASTICITY...................      30000000.000PSI
                    BRACKET PRØFILE LIMITS

MAXIMUM HEIGHT ØF ARM AT SUPPØRT........            50.000IN.
MAXIMUM ELEVATIØN ØF UPPER RING.........            60.000IN.
MINIMUM ELEVATIØN ØF UPPER RING.........            40.000IN.
MAXIMUM ØUTSIDE DIAMETER ØF RINGS.......           200.000IN.
MINIMUM ØUTSIDE DIAMETER ØF RINGS.......           130.000IN.
MAXIMUM INSIDE DIAMETER ØF LØWER RING...            75.250IN.
MINIMUM INSIDE DIAMETER ØF LØWER RING...            75.250IN.
MAXIMUM SLØPE ØF LØWER FLANGE...........             1.000
MINIMUM SLØPE ØF LØWER FLANGE...........             0.000
          UNKNØWN PARAMETER ESTIMATES

ØUTSIDE DIAMETER ØF RINGS...............           157.000IN.
UPPER RING THICKNESS....................             4.000IN.
LØWER RING THICKNESS....................             3.500IN.
DISTANCE BETWEEN RINGS..................            49.500IN.
BEAM FLANGE THICKNESS...................             1.500IN.
BEAM WEB THICKNESS......................             1.500IN.
INTERNAL DIAMETER ØF LØWER RING.........            49.500IN.
WIDTH ØF BEAM FLANGE....................            20.000IN.
SLØPE ØF UPPER FLANGE ØF BEAM...........             0.500
SLØPE ØF LØWER FLANGE ØF BEAM...........             0.100
                    CALCULATED TERMS

INITIAL WEIGHT..........................         49986.418LB.
MAXIMUM VERTICAL REACTIØN DUE TØ SCF....        381693.441LB.
MAXIMUM HØRIZØNTAL REACTIØN DUE TØ SCF..       1180000.000LB.
INITIAL NØRMAL VERTICAL REACTIØN........        435496.602LB.
                    LIMITS

MAXIMUM ALLØWABLE STRUCTURE DEFLECTIØN..             0.100IN.
BRACKET CRITICAL FREQUENCY LIMIT........           378.000CPM
MAXIMUM NØRMAL TENSILE STRESS...........         11666.667PSI
MAXIMUM NØRMAL SHEAR STRESS.............          5833.333PSI
MAXIMUM EMERGENCY TENSILE STRESS........         23333.333PSI
```

```
MAXIMUM EMERGENCY SHEAR STRESS..........              11666.667PSI


MAXIMUM WEB SHEAR IN BEAM=0.40*SY ØR 64'000'000 PSI*(2.*TW/H)**2
        WHICHEVER IS LESS (CSA S16-1961 CLAUSE 12.5)

MAXIMUM STRESS IN CØMPRESSIØN FLANGE ØF ARM TØ LIMIT LØCAL
        BUCKLING=KC*E(TF/WID)**2, WHERE KC=6.3

NNN=    1            U(11)=  0.486972E 05LB.

NNN=    2            U(22)=  0.465522E 05LB.

NNN=    3            U(22)=  0.433346E 05LB.

NNN=    4            U(22)=  0.403866E 05LB.

NNN=    5            U(22)=  0.197581E 13LB.

NNN=    6            U(11)=  0.403866E 05LB.

                     ØPTIMUM SØLUTIØN

ØUTSIDE DIAMETER ØF RINGS...............             159.000IN.
UPPER RING THICKNESS....................               2.750IN.
LØWER RING THICKNESS....................               2.500IN.
DISTANCE BETWEEN RINGS..................              49.250IN.
BEAM FLANGE THICKNESS...................               1.500IN.
BEAM WEB THICKNESS......................               1.500IN.
INTERNAL DIAMETER ØF LØWER RING.........              75.250IN.
WIDTH ØF BEAM FLANGE....................              20.000IN.
SLØPE ØF UPPER FLANGE ØF BEAM...........               0.000
SLØPE ØF LØWER FLANGE ØF BEAM...........               0.100

MINIMUM WEIGHT..........................           40386.590LB.

                     FINAL CALCULATIØNS

PHI(  1)=           0.074       .LE.           0.100
PHI(  2)=         911.630       .GE.         378.000
PHI(  3)=      743518.117       .LE.      805506.250
PHI(  4)=           2.500       .GE.      —   -1.749
PHI(  5)=           0.100       .GE.           0.000
PHI(  6)=       10593.710       .LE.       11666.667
PHI(  7)=        8529.945       .LE.       11666.667
PHI(  8)=       11653.082       .LE.       11666.667
PHI(  9)=        9382.939       .LE.       11666.667
PHI( 10)=        3848.689       .LE.        5833.333
PHI( 11)=        7763.583       .LE.       11666.667
PHI( 12)=        2597.545       .LE.        5833.333
PHI( 13)=        5239.772       .LE.       11666.667
PHI( 14)=        7763.583       .LE.       14000.000
PHI( 15)=        7726.459       .LE.       11666.667
```

```
PHI( 16)=        21281.879     .LE.          23333.333
PHI( 17)=         7934.485     .LE.          11666.667
PHI( 18)=        21281.879     .LE.          21350.000
PHI( 19)=           47.525     .LE.             50.000
PHI( 20)=          159.000     .LE.            200.000
PHI( 21)=          159.000     .GE.            130.000
PHI( 22)=           75.250     .LE.             75.250
PHI( 23)=           75.250     .GE.             75.250
PHI( 24)=           48.775     .LE.             67.664
PHI( 25)=           48.775     .GE.             40.000
PHI( 26)=           48.775     .LE.             60.000
PHI( 27)=            0.100     .LE.              1.000
PHI( 28)=            0.100     .GE.              0.000

                UNKNØWN PARAMETER ESTIMATES

ØUTSIDE DIAMETER ØF RINGS...............        180.000IN.
UPPER RING THICKNESS....................          2.000IN.
LØWER RING THICKNESS....................          2.000IN.
DISTANCE BETWEEN RINGS..................         35.000IN.
BEAM FLANGE THICKNESS...................          1.000IN.
BEAM WEB THICKNESS......................          1.000IN.
INTERNAL DIAMETER ØF LØWER RING.........         64.000IN.
WIDTH ØF BEAM FLANGE....................         10.000IN.
SLØPE ØF UPPER FLANGE ØF BEAM...........          0.200
SLØPE ØF LØWER FLANGE ØF BEAM...........          0.800

                     CALCULATED TERMS

INITIAL WEIGHT..........................      30879.112LB.
MAXIMUM VERTICAL REACTIØN DUE TØ SCF....     381693.441LB.
MAXIMUM HØRIZØNTAL REACTIØN DUE TØ SCF..    1180000.000LB.
INITIAL NØRMAL VERTICAL REACTIØN........     430719.777LB.

NNN=    7          U(11)=   0.216532E 13LB.

NNN=    8          U(22)=   0.251045E 12LB.

NNN=    9          U(22)=   0.104113E 12LB.

NNN=   10          U(22)=   0.143088E 11LB.

NNN=   11          U(22)=   0.255030E 07LB.

NNN=   12          U(22)=   0.130180E 07LB.

NNN=   13          U(22)=   0.741539E 12LB.

NNN=   14          U(11)=   0.518365E 05LB.

NNN=   15          U(22)=   0.504729E 05LB.

NNN=   16          U(22)=   0.129933E 07LB.

NNN=   17          U(11)=   0.496416E 05LB.

NNN=   18          U(22)=   0.129900E 07LB.
```

```
NNN=  19          U(11)=  0.496113E 05LB.

NNN=  20          U(22)=  0.495506E 05LB.

NNN=  21          U(22)=  0.494596E 05LB.

NNN=  22          U(22)=  0.493686E 05LB.

NNN=  23          U(22)=  0.495297E 05LB.

NNN=  24          U(11)=  0.493686E 05LB.
                        ØPTIMUM SØLUTIØN

ØUTSIDE DIAMETER ØF RINGS...............               196.000IN.
UPPER RING THICKNESS....................                 2.125IN.
LØWER RING THICKNESS....................                 2.000IN.
DISTANCE BETWEEN RINGS..................                52.750IN.
BEAM FLANGE THICKNESS...................                 1.688IN.
BEAM WEB THICKNESS......................                 1.688IN.
INTERNAL DIAMETER ØF LØWER RING.........                75.250IN.
WIDTH ØF BEAM FLANGE....................                23.000IN.
SLØPE ØF UPPER FLANGE ØF BEAM...........                 0.000
SLØPE ØF LØWER FLANGE ØF BEAM...........                 0.680

MINIMUM WEIGHT..........................             49368.595LB.

                        FINAL CALCULATIØNS

PHI(  1)=             0.044      .LE.             0.100
PHI(  2)=          1175.165      .GE.           378.000
PHI(  3)=        696747.359      .LE.        697197.305
PHI(  4)=             2.000      .GE.             1.124
PHI(  5)=             0.680      .GE.             0.000
PHI(  6)=          8708.973      .LE.         11666.667
PHI(  7)=          5879.234      .LE.         11666.667
PHI(  8)=          9253.284      .LE.         11666.667
PHI(  9)=          6246.686      .LE.         11666.667
PHI( 10)=          4299.567      .LE.          5833.333
PHI( 11)=         11656.277      .LE.         11666.667
PHI( 12)=          2680.189      .LE.          5833.333
PHI( 13)=          7266.086      .LE.         11666.667
PHI( 14)=         11656.277      .LE.         14000.000
PHI( 15)=          3166.864      .LE.         11666.667
PHI( 16)=         13605.117      .LE.         23333.333
PHI( 17)=          4208.214      .LE.         11666.667
PHI( 18)=         13605.117      .LE.         21350.000
PHI( 19)=            36.575      .LE.            50.000
PHI( 20)=           196.000      .LE.           200.000
PHI( 21)=           196.000      .GE.           130.000
PHI( 22)=            75.250      .LE.            75.250
PHI( 23)=            75.250      .GE.            75.250
PHI( 24)=            37.013      .LE.            60.748
PHI( 25)=            37.013      .GE.            40.000
PHI( 26)=            37.013      .LE.            60.000
PHI( 27)=             0.680      .LE.             1.000
PHI( 28)=             0.680      .GE.             0.000
```

```
                    UNKNØWN PARAMETER ESTIMATES

ØUTSIDE DIAMETER ØF RINGS................                200.000IN.
UPPER RING THICKNESS.....................                  6.000IN.
LØWER RING THICKNESS.....................                  6.000IN.
DISTANCE BETWEEN RINGS...................                 60.000IN.
BEAM FLANGE THICKNESS....................                  4.000IN.
BEAM WEB THICKNESS.......................                  4.000IN.
INTERNAL DIAMETER ØF LØWER RING.........                  75.250IN.
WIDTH ØF BEAM FLANGE.....................                 30.000IN.
SLØPE ØF UPPER FLANGE ØF BEAM............                  0.000
SLØPE ØF LØWER FLANGE ØF BEAM............                  1.000

                          CALCULATED TERMS

INITIAL WEIGHT...........................             143371.473LB.
MAXIMUM VERTICAL REACTIØN DUE TØ SCF....              381693.441LB.
MAXIMUM HØRIZØNTAL REACTIØN DUE TØ SCF..             1180000.000LB.
INITIAL NØRMAL VERTICAL REACTIØN........              458842.867LB.

NNN=  25          U(11)=  0.139424E 06LB.

NNN=  26          U(22)=  0.131679E 06LB.

NNN=  27          U(22)=  0.120437E 06LB.

NNN=  28          U(22)=  0.106147E 06LB.

NNN=  29          U(22)=  0.893985E 05LB.

NNN=  30          U(22)=  0.738941E 05LB.

NNN=  31          U(22)=  0.149031E 11LB.

NNN=  32          U(11)=  0.720951E 05LB.

NNN=  33          U(22)=  0.690777E 05LB.

NNN=  34          U(22)=  0.643906E 05LB.

NNN=  35          U(22)=  0.588813E 05LB.

NNN=  36          U(22)=  0.158166E 13LB.

NNN=  37          U(11)=  0.580337E 05LB.

NNN=  38          U(22)=  0.579258E 05LB.

NNN=  39          U(22)=  0.578862E 05LB.

NNN=  40          U(11)=  0.579258E 05LB.
                          ØPTIMUM SØLUTIØN

ØUTSIDE DIAMETER ØF RINGS................                185.000IN.
UPPER RING THICKNESS.....................                  2.250IN.
LØWER RING THICKNESS.....................                  2.000IN.
DISTANCE BETWEEN RINGS...................                 54.000IN.
```

```
BEAM FLANGE THICKNESS......................                        2.313IN.
BEAM WEB THICKNESS.........................                        2.813IN.
INTERNAL DIAMETER ØF LØWER RING............                       75.250IN.
WIDTH ØF BEAM FLANGE.......................                       23.000IN.
SLØPE ØF UPPER FLANGE ØF BEAM..............                        0.000
SLØPE ØF LØWER FLANGE ØF BEAM..............                        0.990

MINIMUM WEIGHT.............................                    57925.831LB.

                  FINAL CALCULATIØNS

PHI(  1)=             0.038       .LE.                   0.100
PHI(  2)=          1270.061       .GE.                 378.000
PHI(  3)=        676858.102       .LE.              709244.008
PHI(  4)=             2.000       .GE.                   1.249
PHI(  5)=             0.990       .GE.                   0.000
PHI(  6)=          8809.108       .LE.               11666.667
PHI(  7)=          6234.527       .LE.               11666.667
PHI(  8)=          9910.247       .LE.               11666.667
PHI(  9)=          7013.843       .LE.               11666.667
PHI( 10)=          3911.995       .LE.                5833.333
PHI( 11)=         11664.741       .LE.               11666.667
PHI( 12)=          1679.717       .LE.                5833.333
PHI( 13)=          5008.560       .LE.               11666.667
PHI( 14)=         11664.741       .LE.               14000.000
PHI( 15)=          2375.443       .LE.               11666.667
PHI( 16)=         10424.947       .LE.               23333.333
PHI( 17)=          3232.204       .LE.               11666.667
PHI( 18)=         10424.947       .LE.               21350.000
PHI( 19)=            24.718       .LE.                  50.000
PHI( 20)=           185.000       .LE.                 200.000
PHI( 21)=           185.000       .GE.                 130.000
PHI( 22)=            75.250       .LE.                  75.250
PHI( 23)=            75.250       .GE.                  75.250
PHI( 24)=            24.655       .LE.                  62.804
PHI( 25)=            24.655       .GE.                  40.000
PHI( 26)=            24.655       .LE.                  60.000
PHI( 27)=             0.990       .LE.                   1.000
PHI( 28)=             0.990       .GE.                   0.000

$CARD READ

      D L SAXTØN
```

F.2

DESIGN 2

```
                     CØNSTANT PARAMETERS
NUMBER ØF ARMS.............................                  4
PØISSØN'S RATIØ............................              0.300
NØRMAL FACTØR ØF SAFETY....................              3.000
EMERGENCY FACTØR ØF SAFETY.................              1.500
INTERNAL DIAMETER ØF UPPER RING............          90.000IN.
DISTANCE FRØM LINE ØF ACTIØN ØF FSC TØ
     PLANE ØF SUPPØRTS.....................          84.750IN.
DIAMETER ØVER SUPPØRT PØINTS...............         264.750IN.
TURBINE ØVERSPEED..........................         400.000RPM
PLATE YIELD STRENGTH.......................       35000.000PSI
HYDRAULIC THRUST...........................      720000.000LB.
MAXIMUM STATIC LØAD........................     1083000.000LB.
SHØRT CIRCUIT FØRCE........................     1290000.000LB.
MØDULUS ØF ELASTICITY......................    30000000.000PSI
          RANGES FØR VARIABLES

     130.00000  .GE.  Z(  1)  .LE. 200.00000
       2.00000  .GE.  Z(  2)  .LE.   6.00000
       2.00000  .GE.  Z(  3)  .LE.   6.00000
      40.00000  .GE.  Z(  4)  .LE.  60.00000
       1.50000  .GE.  Z(  5)  .LE.   3.00000
       1.50000  .GE.  Z(  6)  .LE.   3.00000
      90.00000  .GE.  Z(  7)  .LE.  90.00000
      15.00000  .GE.  Z(  8)  .LE.  30.00000
       0.00000  .GE.  Z(  9)  .LE.   0.00000
       0.00000  .GE.  Z( 10)  .LE.   1.00000
                     BRACKET PRØFILE LIMITS

MAXIMUM HEIGHT ØF ARM AT SUPPØRT...........          50.000IN.
MAXIMUM ELEVATIØN ØF UPPER RING............          45.000IN.
MINIMUM ELEVATIØN ØF UPPER RING............          43.000IN.
MAXIMUM ØUTSIDE DIAMETER ØF RINGS..........         200.000IN.
MINIMUM ØUTSIDE DIAMETER ØF RINGS..........         130.000IN.
MAXIMUM INSIDE DIAMETER ØF LØWER RING......          90.000IN.
MINIMUM INSIDE DIAMETER ØF LØWER RING......          90.000IN.
MAXIMUM SLØPE ØF LØWER FLANGE..............              1.000
MINIMUM SLØPE ØF LØWER FLANGE..............              0.000
          UNKNØWN PARAMETER ESTIMATES

ØUTSIDE DIAMETER ØF RINGS..................         157.000IN.
UPPER RING THICKNESS.......................           4.000IN.
LØWER RING THICKNESS.......................           3.500IN.
DISTANCE BETWEEN RINGS.....................          49.500IN.
BEAM FLANGE THICKNESS......................           1.500IN.
BEAM WEB THICKNESS.........................           1.500IN.
INTERNAL DIAMETER ØF LØWER RING............          49.500IN.
WIDTH ØF BEAM FLANGE.......................          20.000IN.
SLØPE ØF UPPER FLANGE ØF BEAM..............              0.500
SLØPE ØF LØWER FLANGE ØF BEAM..............              0.100
                     CALCULATED TERMS
```

```
INITIAL WEIGHT..........................            47345.478LB.
MAXIMUM VERTICAL REACTIØN DUE TØ SCF....           412943.141LB.
MAXIMUM HØRIZØNTAL REACTIØN DUE TØ SCF..          1290000.000LB.
INITIAL NØRMAL VERTICAL REACTIØN........           462586.367LB.

                         LIMITS

MAXIMUM ALLØWABLE STRUCTURE DEFLECTIØN..              0.100IN.
BRACKET CRITICAL FREQUENCY LIMIT........            540.000CPM
MAXIMUM NØRMAL TENSILE STRESS...........          11666.667PSI
MAXIMUM NØRMAL SHEAR STRESS.............           5833.333PSI
MAXIMUM EMERGENCY TENSILE STRESS........          23333.333PSI
MAXIMUM EMERGENCY SHEAR STRESS..........          11666.667PSI



MAXIMUM WEB SHEAR IN BEAM=0.40*SY ØR 64'000'000 PSI*(2.*TW/H)**2,
        WHICHEVER IS LESS (CSA S16-1961 CLAUSE 12.5)

MAXIMUM STRESS IN CØMPRESSIØN FLANGE ØF ARM TØ LIMIT LØCAL
        BUCKLING=KC*E(TF/WID)**2, WHERE KC=6.3

              STEP LENGTHS FØR VARIABLES

                 DX(  1)=  1.000000
                 DX(  2)=  0.125000
                 DX(  3)=  0.125000
                 DX(  4)=  0.250000
                 DX(  5)=  0.062500
                 DX(  6)=  0.062500
                 DX(  7)=  1.000000
                 DX(  8)=  0.250000
                 DX(  9)=  0.010000
                 DX( 10)=  0.010000

                     ØPTIMIZATIØN


NNN=    1          U(11)=  0.259850E 11LB.

NNN=    2          U(22)=  0.147910E 09LB.

NNN=    3          U(22)=  0.143913E 09LB.

NNN=    4          U(22)=  0.261078E 12LB.

NNN=    5          U(11)=  0.142662E 09LB.

NNN=    6          U(22)=  0.137615E 09LB.

NNN=    7          U(22)=  0.133196E 09LB.
```

```
NNN=   8            U(22)=  0.126676E 09LB.

NNN=   9            U(22)=  0.116184E 09LB.

NNN=  10            U(22)=  0.104521E 09LB.

NNN=  11            U(22)=  0.823827E 08LB.

NNN=  12            U(22)=  0.579721E 08LB.

NNN=  13            U(22)=  0.292145E 08LB.

NNN=  14            U(22)=  0.754964E 07LB.

NNN=  15            U(22)=  0.475517E 08LB.

NNN=  16            U(11)=  0.504924E 07LB.

NNN=  17            U(22)=  0.492836E 05LB.

NNN=  18            U(22)=  0.491530E 05LB.

NNN=  19            U(22)=  0.502603E 05LB.

NNN=  20            U(11)=  0.491202E 05LB.

NNN=  21            U(22)=  0.495342E 05LB.

NNN=  22            U(11)=  0.491202E 05LB.
                          ØPTIMUM SØLUTIØN

ØUTSIDE DIAMETER ØF RINGS...............               195.000IN.
UPPER RING THICKNESS....................                 2.750IN.
LØWER RING THICKNESS....................                 2.125IN.
DISTANCE BETWEEN RINGS..................                48.750IN.
BEAM FLANGE THICKNESS...................                 1.625IN.
BEAM WEB THICKNESS......................                 1.625IN.
INTERNAL DIAMETER ØF LØWER RING.........                90.000IN.
WIDTH ØF BEAM FLANGE....................                15.000IN.
SLØPE ØF UPPER FLANGE ØF BEAM...........                 0.000
SLØPE ØF LØWER FLANGE ØF BEAM...........                 0.290

MINIMUM WEIGHT..........................             49120.228LB.
                          FINAL CALCULATIØNS

PHI(  1)=              0.079      .LE.                   0.100
PHI(  2)=            855.027      .GE.                 540.000
PHI(  3)=         784738.273      .LE.              876158.133
PHI(  4)=              2.125      .GE.                   1.749
PHI(  5)=              0.290      .GE.                   0.000
PHI(  6)=           8871.362      .LE.               11666.667
PHI(  7)=           6987.966      .LE.               11666.667
PHI(  8)=          11480.586      .LE.               11666.667
PHI(  9)=           9043.251      .LE.               11666.667
PHI( 10)=           4417.201      .LE.                5833.333
PHI( 11)=          10104.980      .LE.               11666.667
```

```
PHI( 12)=          2776.115      .LE.          5833.333
PHI( 13)=          6350.761      .LE.         11666.667
PHI( 14)=         10104.980      .LE.         14000.000
PHI( 15)=          6528.991      .LE.         11666.667
PHI( 16)=         21301.095      .LE.         23333.333
PHI( 17)=          7165.328      .LE.         11666.667
PHI( 18)=         21301.095      .LE.         21350.000
PHI( 19)=            41.886      .LE.            50.000
PHI( 20)=           195.000      .LE.           200.000
PHI( 21)=           195.000      .GE.           130.000
PHI( 22)=            90.000      .LE.            90.000
PHI( 23)=            90.000      .GE.            90.000
PHI( 24)=            43.011      .LE.            44.614
PHI( 25)=            43.011      .GE.            43.000
PHI( 26)=            43.011      .LE.            45.000
PHI( 27)=             0.290      .LE.             1.000
PHI( 28)=             0.290      .GE.             0.000
           UNKNØWN PARAMETER ESTIMATES

ØUTSIDE DIAMETER ØF RINGS................          180.000IN.
UPPER RING THICKNESS.....................            2.000IN.
LØWER RING THICKNESS.....................            2.000IN.
DISTANCE BETWEEN RINGS...................           35.000IN.
BEAM FLANGE THICKNESS....................            1.000IN.
BEAM WEB THICKNESS.......................            1.000IN.
INTERNAL DIAMETER ØF LØWER RING..........           64.000IN.
WIDTH ØF BEAM FLANGE.....................           10.000IN.
SLØPE ØF UPPER FLANGE ØF BEAM............            0.200
SLØPE ØF LØWER FLANGE ØF BEAM............            0.800
                 CALCULATED TERMS

INITIAL WEIGHT...........................        29299.563LB.
MAXIMUM VERTICAL REACTIØN DUE TØ SCF.....       412943.141LB.
MAXIMUM HØRIZØNTAL REACTIØN DUE TØ SCF..       1290000.000LB.
INITIAL NØRMAL VERTICAL REACTIØN.........       458074.891LB.
                   ØPTIMIZATIØN


NNN=   23          U(11)=  0.447750E 13LB.

NNN=   24          U(22)=  0.293156E 13LB.

NNN=   25          U(22)=  0.575997E 05LB.

NNN=   26          U(22)=  0.602867E 05LB.

NNN=   27          U(11)=  0.575339E 05LB.

NNN=   28          U(22)=  0.574681E 05LB.

NNN=   29          U(22)=  0.576379E 05LB.

NNN=   30          U(11)=  0.574681E 05LB.
```

```
                              ØPTIMUM SØLUTIØN

ØUTSIDE DIAMETER ØF RINGS................                186.000IN.
UPPER RING THICKNESS.....................                  2.750IN.
LØWER RING THICKNESS.....................                  2.250IN.
DISTANCE BETWEEN RINGS...................                 51.500IN.
BEAM FLANGE THICKNESS....................                  2.625IN.
BEAM WEB THICKNESS.......................                  2.563IN.
INTERNAL DIAMETER ØF LØWER RING..........                 90.000IN.
WIDTH ØF BEAM FLANGE.....................                 23.000IN.
SLØPE ØF UPPER FLANGE ØF BEAM............                  0.000
SLØPE ØF LØWER FLANGE ØF BEAM............                  0.750

MINIMUM WEIGHT...........................              57468.060LB.

                              FINAL CALCULATIØNS

PHI(  1)=              0.069      .LE.                     0.100
PHI(  2)=            911.994      .GE.                   540.000
PHI(  3)=         733660.313      .LE.                743493.734
PHI(  4)=              2.250      .GE.                     1.749
PHI(  5)=              0.750      .GE.                     0.000
PHI(  6)=           9168.245      .LE.                 11666.667
PHI(  7)=           7528.253      .LE.                 11666.667
PHI(  8)=          11205.633      .LE.                 11666.667
PHI(  9)=           9201.198      .LE.                 11666.667
PHI( 10)=           4145.959      .LE.                  5833.333
PHI( 11)=          11659.784      .LE.                 11666.667
PHI( 12)=           2136.063      .LE.                  5833.333
PHI( 13)=           6007.304      .LE.                 11666.667
PHI( 14)=          11659.784      .LE.                 14000.000
PHI( 15)=           3192.670      .LE.                 11666.667
PHI( 16)=          12620.163      .LE.                 23333.333
PHI( 17)=           3980.413      .LE.                 11666.667
PHI( 18)=          12620.163      .LE.                 21350.000
PHI( 19)=             27.219      .LE.                    50.000
PHI( 20)=            186.000      .LE.                   200.000
PHI( 21)=            186.000      .GE.                   130.000
PHI( 22)=             90.000      .LE.                    90.000
PHI( 23)=             90.000      .GE.                    90.000
PHI( 24)=             27.344      .LE.                    43.919
PHI( 25)=             27.344      .GE.                    43.000
PHI( 26)=             27.344      .LE.                    45.000
PHI( 27)=              0.750      .LE.                     1.000
PHI( 28)=              0.750      .GE.                     0.000
                    UNKNØWN PARAMETER ESTIMATES

ØUTSIDE DIAMETER ØF RINGS................                200.000IN.
UPPER RING THICKNESS.....................                  6.000IN.
LØWER RING THICKNESS.....................                  6.000IN.
DISTANCE BETWEEN RINGS...................                 60.000IN.
BEAM FLANGE THICKNESS....................                  3.000IN.
BEAM WEB THICKNESS.......................                  3.000IN.
INTERNAL DIAMETER ØF LØWER RING..........                 90.000IN.
WIDTH ØF BEAM FLANGE.....................                 30.000IN.
SLØPE ØF UPPER FLANGE ØF BEAM............                  0.000
SLØPE ØF LØWER FLANGE ØF BEAM............                  1.000
```

```
                          CALCULATED TERMS
INITIAL WEIGHT.........................                  123872.238LB.
MAXIMUM VERTICAL REACTIØN DUE TØ SCF....                 412943.141LB.
MAXIMUM HØRIZØNTAL REACTIØN DUE TØ SCF..                1290000.000LB.
INITIAL NØRMAL VERTICAL REACTIØN........                 481718.059LB.
                          ØPTIMIZATIØN

NNN=   31             U(11)=   0.120080E 06LB.

NNN=   32             U(22)=   0.112654E 06LB.

NNN=   33             U(22)=   0.101910E 06LB.

NNN=   34             U(22)=   0.100163E 11LB.

NNN=   35             U(11)=   0.100080E 06LB.

NNN=   36             U(22)=   0.973289E 05LB.

NNN=   37             U(22)=   0.932538E 05LB.

NNN=   38             U(22)=   0.869914E 05LB.

NNN=   39             U(22)=   0.400789E 08LB.

NNN=   40             U(11)=   0.851862E 05LB.

NNN=   41             U(22)=   0.815759E 05LB.

NNN=   42             U(22)=   0.764841E 05LB.

NNN=   43             U(22)=   0.200694E 08LB.

NNN=   44             U(11)=   0.746590E 05LB.

NNN=   45             U(22)=   0.710087E 05LB.

NNN=   46             U(22)=   0.200657E 08LB.

NNN=   47             U(11)=   0.692362E 05LB.

NNN=   48             U(22)=   0.656384E 05LB.

NNN=   49             U(22)=   0.524340E 12LB.

NNN=   50             U(11)=   0.647522E 05LB.

NNN=   51             U(22)=   0.629796E 05LB.

NNN=   52             U(22)=   0.620933E 05LB.

NNN=   53             U(22)=   0.620933E 05LB.

NNN=   54             U(11)=   0.620933E 05LB.
```

```
                             ØPTIMUM SØLUTIØN

ØUTSIDE DIAMETER ØF RINGS...............                  200.000IN.
UPPER RING THICKNESS....................                    2.500IN.
LØWER RING THICKNESS....................                    2.000IN.
DISTANCE BETWEEN RINGS..................                   56.000IN.
BEAM FLANGE THICKNESS...................                    2.375IN.
BEAM WEB THICKNESS......................                    2.625IN.
INTERNAL DIAMETER ØF LØWER RING.........                   90.000IN.
WIDTH ØF BEAM FLANGE....................                   24.250IN.
SLØPE ØF UPPER FLANGE ØF BEAM...........                    0.000
SLØPE ØF LØWER FLANGE ØF BEAM...........                    1.000

MINIMUM WEIGHT..........................                62093.268LB.

                             FINAL CALCULATIØNS

PHI(  1)=                  0.057      .LE.                 0.100
PHI(  2)=                999.988      .GE.               540.000
PHI(  3)=             681937.203      .LE.            717389.281
PHI(  4)=                  2.000      .GE.                 1.499
PHI(  5)=                  1.000      .GE.                 0.000
PHI(  6)=               8058.203      .LE.             11666.667
PHI(  7)=               6209.937      .LE.             11666.667
PHI(  8)=              10072.754      .LE.             11666.667
PHI(  9)=               7762.422      .LE.             11666.667
PHI( 10)=               3845.236      .LE.              5833.333
PHI( 11)=              11657.503      .LE.             11666.667
PHI( 12)=               1864.043      .LE.              5833.333
PHI( 13)=               5651.023      .LE.             11666.667
PHI( 14)=              11657.503      .LE.             14000.000
PHI( 15)=               2208.873      .LE.             11666.667
PHI( 16)=              10267.259      .LE.             23333.333
PHI( 17)=               3121.530      .LE.             11666.667
PHI( 18)=              10267.259      .LE.             21350.000
PHI( 19)=                 28.375      .LE.                50.000
PHI( 20)=                200.000      .LE.               200.000
PHI( 21)=                200.000      .GE.               130.000
PHI( 22)=                 90.000      .LE.                90.000
PHI( 23)=                 90.000      .GE.                90.000
PHI( 24)=                 28.500      .LE.                45.000
PHI( 25)=                 28.500      .GE.                43.000
PHI( 26)=                 28.500      .LE.                45.000
PHI( 27)=                  1.000      .LE.                 1.000
PHI( 28)=                  1.000      .GE.                 0.000

$CARD READ

      D L SAXTØN
```

F.3

DESIGN 3

```
                              CØNSTANT PARAMETERS

NUMBER ØF ARMS............................                           4
PØISSØN'S RATIØ...........................                           0.300
NØRMAL FACTØR ØF SAFETY...................                           3.000
EMERGENCY FACTØR ØF SAFETY................                           1.500
INTERNAL DIAMETER ØF UPPER RING...........                          77.000IN.
DISTANCE FRØM LINE ØF ACTIØN ØF FSC TØ
     PLANE ØF SUPPØRTS....................                          58.250IN.
DIAMETER ØVER SUPPØRT PØINTS..............                         270.000IN.
TURBINE ØVERSPEED.........................                         160.000RPM
PLATE YIELD STRENGTH......................                       35000.000PSI
HYDRAULIC THRUST..........................                      305600.000LB.
MAXIMUM STATIC LØAD.......................                      420400.000LB.
SHØRT CIRCUIT FØRCE.......................                      371500.000LB.
MØDULUS ØF ELASTICITY.....................                    30000000.000PSI

                    RANGES FØR VARIABLES


      97.00000   .GE.   Z(  1)   .LE.  216.00000
       2.00000   .GE.   Z(  2)   .LE.    6.00000
       2.00000   .GE.   Z(  3)   .LE.    6.00000
      20.00000   .GE.   Z(  4)   .LE.   80.00000
       1.00000   .GE.   Z(  5)   .LE.    4.00000
       1.00000   .GE.   Z(  6)   .LE.    4.00000
      54.00000   .GE.   Z(  7)   .LE.   77.00000
      15.00000   .GE.   Z(  8)   .LE.   35.00000
       0.00000   .GE.   Z(  9)   .LE.    1.00000
       0.00000   .GE.   Z( 10)   .LE.    0.00000

                              BRACKET PRØFILE LIMITS


MAXIMUM HEIGHT ØF ARM AT SUPPØRT..........                          40.000IN.
MAXIMUM ELEVATIØN ØF UPPER RING...........                          47.750IN.
MINIMUM ELEVATIØN ØF UPPER RING...........                          47.750IN.
MAXIMUM ØUTSIDE DIAMETER ØF RINGS.........                         216.000IN.
MINIMUM ØUTSIDE DIAMETER ØF RINGS.........                          97.000IN.
MAXIMUM INSIDE DIAMETER ØF LØWER RING.....                          77.000IN.
MINIMUM INSIDE DIAMETER ØF LØWER RING.....                          54.000IN.
MAXIMUM SLØPE ØF LØWER FLANGE.............                           0.000
MINIMUM SLØPE ØF LØWER FLANGE.............                           0.000

                    UNKNØWN PARAMETER ESTIMATES

ØUTSIDE DIAMETER ØF RINGS.................                         135.000IN.
UPPER RING THICKNESS......................                           4.000IN.
LØWER RING THICKNESS......................                           4.000IN.
DISTANCE BETWEEN RINGS....................                          43.750IN.
BEAM FLANGE THICKNESS.....................                           2.000IN.
BEAM WEB THICKNESS........................                           2.000IN.
INTERNAL DIAMETER ØF LØWER RING...........                          54.000IN.
WIDTH ØF BEAM FLANGE......................                          30.000IN.
SLØPE ØF UPPER FLANGE ØF BEAM.............                           0.100
SLØPE ØF LØWER FLANGE ØF BEAM.............                           0.100

                              CALCULATED TERMS
```

```
INITIAL WEIGHT..........................         50415.167LB.
MAXIMUM VERTICAL REACTIØN DUE TØ SCF....         80147.097LB.
MAXIMUM HØRIZØNTAL REACTIØN DUE TØ SCF..        371500.000LB.
INITIAL NØRMAL VERTICAL REACTIØN........        194103.791LB.

                 LIMITS

MAXIMUM ALLØWABLE STRUCTURE DEFLECTIØN..             0.100IN.
BRACKET CRITICAL FREQUENCY LIMIT........           216.000CPM
MAXIMUM NØRMAL TENSILE STRESS...........         11666.667PSI
MAXIMUM NØRMAL SHEAR STRESS.............          5833.333PSI
MAXIMUM EMERGENCY TENSILE STRESS........         23333.333PSI
MAXIMUM EMERGENCY SHEAR STRESS..........         11666.667PSI



MAXIMUM WEB SHEAR IN BEAM=0.40*SY ØR 64'000'000 PSI*(2.*TW/H)**
         WHICHEVER IS LESS (CSA S16-1961 CLAUSE 12.5)

MAXIMUM STRESS IN CØMPRESSIØN FLANGE ØF ARM TØ LIMIT LØCAL
         BUCKLING=KC*E(TF/WID)**2, WHERE KC=6.3

          STEP LENGTHS FØR VARIABLES

               DX(  1)=  1.000000
               DX(  2)=  0.125000
               DX(  3)=  0.125000
               DX(  4)=  0.250000
               DX(  5)=  0.062500
               DX(  6)=  0.062500
               DX(  7)=  1.000000
               DX(  8)=  0.250000
               DX(  9)=  0.010000
               DX( 10)=  0.010000

                 ØPTIMIZATIØN

NNN=    1          U(11)=  0.484041E 05LB.

NNN=    2          U(22)=  0.441750E 05LB.

NNN=    3          U(22)=  0.381048E 05LB.

NNN=    4          U(22)=  0.913619E 12LB.

NNN=    5          U(11)=  0.364034E 05LB.

NNN=    6          U(22)=  0.337195E 05LB.

NNN=    7          U(22)=  0.295057E 05LB.
```

```
NNN=   8           U(22)=  0.104100E 06LB.

NNN=   9           U(11)=  0.282401E 05LB.

NNN=  10           U(22)=  0.269905E 05LB.

NNN=  11           U(22)=  0.270126E 05LB.

NNN=  12           U(11)=  0.269905E 05LB.
                     ØPTIMUM SØLUTIØN

ØUTSIDE DIAMETER ØF RINGS...............                127.000IN.
UPPER RING THICKNESS....................                  3.250IN.
LØWER RING THICKNESS....................                  2.250IN.
DISTANCE BETWEEN RINGS..................                 43.375IN.
BEAM FLANGE THICKNESS...................                  1.125IN.
BEAM WEB THICKNESS......................                  1.125IN.
INTERNAL DIAMETER ØF LØWER RING.........                 68.000IN.
WIDTH ØF BEAM FLANGE....................                 26.500IN.
SLØPE ØF UPPER FLANGE ØF BEAM...........                  0.240
SLØPE ØF LØWER FLANGE ØF BEAM...........                  0.000

MINIMUM WEIGHT..........................              26990.481LB.
                     FINAL CALCULATIØNS

PHI(  1)=             0.100      .LE.                     0.100
PHI(  2)=           770.568      .GE.                   216.000
PHI(  3)=        448410.055      .LE.                451369.117
PHI(  4)=             2.250      .GE.                     2.249
PHI(  5)=             0.240      .GE.                     0.000
PHI(  6)=         10114.905      .LE.                 11666.667
PHI(  7)=         10281.998      .LE.                 11666.667
PHI(  8)=         11531.143      .LE.                 11666.667
PHI(  9)=         10385.204      .LE.                 11666.667
PHI( 10)=          3460.652      .LE.                  5833.333
PHI( 11)=          4125.973      .LE.                 11666.667
PHI( 12)=          1911.609      .LE.                  5833.333
PHI( 13)=          2279.122      .LE.                 11666.667
PHI( 14)=          4125.973      .LE.                 14000.000
PHI( 15)=          7027.478      .LE.                 11666.667
PHI( 16)=         10770.354      .LE.                 23333.333
PHI( 17)=          6744.632      .LE.                 11666.667
PHI( 18)=         10770.354      .LE.                 21350.000
PHI( 19)=            28.465      .LE.                    40.000
PHI( 20)=           127.000      .LE.                   216.000
PHI( 21)=           127.000      .GE.                    97.000
PHI( 22)=            68.000      .LE.                    77.000
PHI( 23)=            68.000      .GE.                    54.000
PHI( 24)=            47.750      .LE.                    60.523
PHI( 25)=            47.750      .GE.                    47.750
PHI( 26)=            47.750      .LE.                    47.750
PHI( 27)=             0.000      .LE.                     0.000
PHI( 28)=             0.000      .GE.                     0.000

              UNKNØWN PARAMETER ESTIMATES
```

```
ØUTSIDE DIAMETER ØF RINGS...............          240.000IN.
UPPER RING THICKNESS....................            8.000IN.
LØWER RING THICKNESS....................           10.000IN.
DISTANCE BETWEEN RINGS..................            4.000IN.
BEAM FLANGE THICKNESS...................            3.500IN.
BEAM WEB THICKNESS......................           75.000IN.
INTERNAL DIAMETER ØF LØWER RING.........           60.000IN.
WIDTH ØF BEAM FLANGE....................           25.000IN.
SLØPE ØF UPPER FLANGE ØF BEAM...........            0.050
SLØPE ØF LØWER FLANGE ØF BEAM...........            0.050

                 CALCULATED TERMS

INITIAL WEIGHT..........................       227571.148LB.
MAXIMUM VERTICAL REACTIØN DUE TØ SCF....        80147.097LB.
MAXIMUM HØRIZØNTAL REACTIØN DUE TØ SCF..       371500.000LB.
INITIAL NØRMAL VERTICAL REACTIØN........       238392.787LB.

                 ØPTIMIZATIØN


NNN=  13          U(11)=  0.363407E 08LB.

NNN=  14          U(22)=  0.203376E 08LB.

NNN=  15          U(22)=  0.581943E 05LB.

NNN=  16          U(22)=  0.525189E 05LB.

NNN=  17          U(22)=  0.447503E 05LB.

NNN=  18          U(22)=  0.400355E 08LB.

NNN=  19          U(11)=  0.426466E 05LB.

NNN=  20          U(22)=  0.386671E 05LB.

NNN=  21          U(22)=  0.331221E 05LB.

NNN=  22          U(22)=  0.652532E 06LB.

NNN=  23          U(11)=  0.313428E 05LB.

NNN=  24          U(22)=  0.288356E 05LB.

NNN=  25          U(22)=  0.652517E 06LB.

NNN=  26          U(11)=  0.282325E 05LB.

NNN=  27          U(22)=  0.273503E 05LB.

NNN=  28          U(22)=  0.268423E 05LB.

NNN=  29          U(22)=  0.267817E 05LB.

NNN=  30          U(22)=  0.267723E 05LB.
```

```
NNN=  31              U(11)=  0.267817E 05LB.
                           ØPTIMUM SØLUTIØN

ØUTSIDE DIAMETER ØF RINGS................                    137.500IN.
UPPER RING THICKNESS.....................                      3.125IN.
LØWER RING THICKNESS.....................                      2.250IN.
DISTANCE BETWEEN RINGS...................                     43.125IN.
BEAM FLANGE THICKNESS....................                      1.500IN.
BEAM WEB THICKNESS.......................                      1.000IN.
INTERNAL DIAMETER ØF LØWER RING..........                     77.000IN.
WIDTH ØF BEAM FLANGE.....................                     16.500IN.
SLØPE ØF UPPER FLANGE ØF BEAM............                      0.380
SLØPE ØF LØWER FLANGE ØF BEAM............                      0.000

MINIMUM WEIGHT...........................                  26781.702LB.

                         FINAL CALCULATIØNS

PHI(  1)=               0.100        .LE.                    0.100
PHI(  2)=             770.232        .GE.                  216.000
PHI(  3)=          447030.020        .LE.               598467.391
PHI(  4)=               2.250        .GE.                    2.124
PHI(  5)=               0.380        .GE.                    0.000
PHI(  6)=            8245.318        .LE.                11666.667
PHI(  7)=            7749.251        .LE.                11666.667
PHI(  8)=           11451.831        .LE.                11666.667
PHI(  9)=           10762.849        .LE.                11666.667
PHI( 10)=            5348.751        .LE.                 5833.333
PHI( 11)=            5688.138        .LE.                11666.667
PHI( 12)=            2375.530        .LE.                 5833.333
PHI( 13)=            2526.262        .LE.                11666.667
PHI( 14)=            5688.138        .LE.                14000.000
PHI( 15)=            7843.819        .LE.                11666.667
PHI( 16)=           11148.114        .LE.                23333.333
PHI( 17)=            7338.781        .LE.                11666.667
PHI( 18)=           11148.114        .LE.                21350.000
PHI( 19)=              20.950        .LE.                   40.000
PHI( 20)=             137.500        .LE.                  216.000
PHI( 21)=             137.500        .GE.                   97.000
PHI( 22)=              77.000        .LE.                   77.000
PHI( 23)=              77.000        .GE.                   54.000
PHI( 24)=              47.750        .LE.                   59.016
PHI( 25)=              47.750        .GE.                   47.750
PHI( 26)=              47.750        .LE.              —   -47.750
PHI( 27)=               0.000        .LE.                    0.000
PHI( 28)=               0.000        .GE.                    0.000
                  UNKNØWN PARAMETER ESTIMATES

ØUTSIDE DIAMETER ØF RINGS................                     66.000IN.
UPPER RING THICKNESS.....................                      1.500IN.
LØWER RING THICKNESS.....................                      1.000IN.
DISTANCE BETWEEN RINGS...................                      0.500IN.
BEAM FLANGE THICKNESS....................                      0.500IN.
BEAM WEB THICKNESS.......................                     45.000IN.
INTERNAL DIAMETER ØF LØWER RING..........                     35.000IN.
WIDTH ØF BEAM FLANGE.....................                     10.000IN.
```

```
SLØPE ØF UPPER FLANGE ØF BEAM...........                 0.000
SLØPE ØF LØWER FLANGE ØF BEAM...........                 0.200

                    CALCULATED TERMS

INITIAL WEIGHT..........................         -102034.985LB.
MAXIMUM VERTICAL REACTIØN DUE TØ SCF....           80147.097LB.
MAXIMUM HØRIZØNTAL REACTIØN DUE TØ SCF..          371500.000LB.
INITIAL NØRMAL VERTICAL REACTIØN........          155991.252LB.

                    ØPTIMIZATIØN


NNN=   32          U(11)=   0.549629E 08LB.

NNN=   33          U(22)=   0.394597E 08LB.

NNN=   34          U(22)=   0.179553E 08LB.

NNN=   35          U(22)=   0.495213E 05LB.

NNN=   36          U(22)=   0.300419E 08LB.

NNN=   37          U(11)=   0.472871E 05LB.

NNN=   38          U(22)=   0.431578E 05LB.

NNN=   39          U(22)=   0.372200E 05LB.

NNN=   40          U(22)=   0.297807E 05LB.

NNN=   41          U(22)=   0.395544E 12LB.

NNN=   42          U(11)=   0.286708E 05LB.

NNN=   43          U(22)=   0.264659E 05LB.

NNN=   44          U(22)=   0.305210E 12LB.

NNN=   45          U(11)=   0.262075E 05LB.

NNN=   46          U(22)=   0.263421E 05LB.

NNN=   47          U(11)=   0.261692E 05LB.

NNN=   48          U(22)=   0.263534E 05LB.

NNN=   49          U(11)=   0.261692E 05LB.

                    ØPTIMUM SØLUTIØN

ØUTSIDE DIAMETER ØF RINGS...............               136.500IN.
UPPER RING THICKNESS....................                 2.875IN.
LØWER RING THICKNESS....................                 2.250IN.
DISTANCE BETWEEN RINGS..................                43.875IN.
BEAM FLANGE THICKNESS...................                 1.000IN.
BEAM WEB THICKNESS......................                 1.063IN.
```

```
INTERNAL DIAMETER ØF LØWER RING.........                 76.500IN.
WIDTH ØF BEAM FLANGE....................                 18.750IN.
SLØPE ØF UPPER FLANGE ØF BEAM...........                 0.240
SLØPE ØF LØWER FLANGE ØF BEAM...........                 0.000

MINIMUM WEIGHT..........................              26169.191LB.

                     FINAL CALCULATIØNS

PHI(  1)=               0.100      .LE.               0.100
PHI(  2)=             770.549      .GE.             216.000
PHI(  3)=          444177.898      .LE.          452858.055
PHI(  4)=               2.250      .GE.               1.874
PHI(  5)=               0.240      .GE.               0.000
PHI(  6)=            9090.078      .LE.           11666.667
PHI(  7)=            8603.570      .LE.           11666.667
PHI(  8)=           11478.318      .LE.           11666.667
PHI(  9)=           10795.895      .LE.           11666.667
PHI( 10)=            3623.781      .LE.            5833.333
PHI( 11)=            4321.225      .LE.           11666.667
PHI( 12)=            1921.306      .LE.            5833.333
PHI( 13)=            2291.086      .LE.           11666.667
PHI( 14)=            4321.225      .LE.           14000.000
PHI( 15)=            8735.512      .LE.           11666.667
PHI( 16)=           13296.237      .LE.           23333.333
PHI( 17)=            8395.372      .LE.           11666.667
PHI( 18)=           13296.237      .LE.           21350.000
PHI( 19)=              29.855      .LE.              40.000
PHI( 20)=             136.500      .LE.             216.000
PHI( 21)=             136.500      .GE.              97.000
PHI( 22)=              76.500      .LE.              77.000
PHI( 23)=              76.500      .GE.              54.000
PHI( 24)=              47.750      .LE.              59.160
PHI( 25)=              47.750      .GE.              47.750
PHI( 26)=              47.750      .LE.              47.750
PHI( 27)=               0.000      .LE.               0.000
PHI( 28)=               0.000      .GE.               0.000

$CARD READ

      D L SAXTØN
```

APPENDIX G

OPTIMIZATION COMPUTER PROGRAMME AND RESULTS

```
$IBFTC MIN
C
C      LOWER BRACKET OPTIMIZATION BY THE DIRECT SEARCH METHOD
C      COMBINED WITH SUCCESSIVE LINEAR APPROXIMATION AND SIMPLEX
C      SOLUTION OF LINEARIZED SYSTEM
C
       DIMENSION RETA(15)
       DIMENSION XMEM(15)
       DIMENSION DXX(15)
       DIMENSION X(15,5),Z(15),U(50),PHI(50),BETA(15),DX(15)
       DIMENSION B(50)
       DIMENSION C(7)
       DIMENSION RANGE(15,2)
       DIMENSION ZINT(10)
       DIMENSION RNGSTR(10,2)
       DIMENSION ZLIM(20)
       COMMON B,C,Z,U,PHI,SPAN,IDU,PI,N,E,SL,HTHR,MU,RV,P,RH,SY,FS,FSE
       COMMON DELTAB,DELTAS,DELTAU,DELTAL
       COMMON SUM5,M
       COMMON HOMAX,HRMAX,HRMIN,ODMAX,ODMIN,IDLMAX,IDLMIN,A2MAX,A2MIN
       COMMON RANGE
C
C              KNOWN PARAMETERS
C
C         N=NUMBER OF ARMS
C         IDU=INTERNAL DIAMETER OF UPPER RING
C         E=MODULUS OF ELASTICITY
C         HTHR=HYDRAULIC THRUST
C         MU=POISSON'S RATIO
C         SY=YIELD STRENGTH OF PLATE MATERIAL
C         FS=FACTOR OF SAFETY UNDER NORMAL CONDITIONS
C         FSE=FACTOR OF SAFETY UNDER EMERGENCY CONDITIONS
C         FSC=SHORT CIRCUIT FORCE
C         HI=DISTANCE FROM LINE OF ACTION OF FSC TO PLANE OF SUPPORTS
C         SL=MAXIMUM STATIC LOAD
C         OS=OVERSPEED OF TURBINE
C         SPAN=DIAMETER OVER SUPPORT POINTS
C
C      READ IN KNOWN PARAMETERS
C
       REAL MU,IDU,IDL,L  ,
       READ(5,1) NCLIM,DXLIM
       READ(5,1)N,IDU,MU
       READ(5,2)HTHR,SL,E,SY,FSC
       READ(5,3)FS,FSE,HI,OS,SPAN
       WRITE(6,101)
       WRITE(6,102)N
       WRITE(6,109)MU
       WRITE(6,112)FS
       WRITE(6,113)FSE
```

```
      WRITE(6,103)IDU
      WRITE(6,115)
      WRITE(6,120)HI
      WRITE(6,119)SPAN
      WRITE(6,117)OS
      WRITE(6,110)SY
      WRITE(6,107)HTHR
      WRITE(6,111)SL
      WRITE(6,114)FSC
      WRITE(6,108)E
C
C     READ IN BRACKET PROFILE LIMITS
C
      REAL IDLMAX,IDLMIN
      READ(5,500)HOMAX,HRMAX,HRMIN
      READ(5,500)((RANGE(L31,L32),L32=1,2),L31=1,10)
      READ(5,8) (ZLIM(J),J=1,20)
      WRITE(6,499)
      DO 498 I89=1,10
      RNGSTR(I89,1)=RANGE(I89,1)
      RNGSTR(I89,2)=RANGE(I89,2)
      B(I89+22)=-RANGE(I89,1)
      B(I89+32)=RANGE(I89,2)
      WRITE(6,402) RANGE(I89,1),I89,RANGE(I89,2)
  498 CONTINUE
      ODMAX=RANGE(1,2)
      ODMIN=RANGE(1,1)
      IDLMAX=RANGE(7,2)
      IDLMIN=RANGE(7,1)
      A2MAX=RANGE(10,2)
      A2MIN=RANGE(10,1)
      WRITE(6,502)
      WRITE(6,503)HOMAX
      WRITE(6,504)HRMAX
      WRITE(6,505)HRMIN
      WRITE(6,506)ODMAX
      WRITE(6,507)ODMIN
      WRITE(6,508)IDLMAX
      WRITE(6,509)IDLMIN
      WRITE(6,510)A2MAX
      WRITE(6,511)A2MIN
C
C              UNKNOWN PARAMETERS
C
C        OD=OUTSIDE DIAMETER OF RINGS
C        TU=THICKNESS OF UPPER RING
C        TL=THICKNESS OF LOWER RING
C        H=DISTANCE BETWEEN RINGS
C        TF=THICKNESS OF BEAM FLANGE
C        TW=THICKNESS OF BEAM WEB
```

```
C           IDL=INTERNAL DIAMETER OF LOWER RING
C           WID=WIDTH OF BEAM FLANGE
C           ALPHA1=SLOPE OF UPPER FLANGE OF BEAM
C           ALPHA2=SLOPE OF LOWER FLANGE OF BEAM
C
      NNN=0
      ITER=0
  360 CONTINUE
      NCALL=0
C     READ IN ESTIMATES FOR UNKNOWN PARAMETERS
C
      READ(5,3)OD,TU,TL,IDL,H,TF,TW,WID,ALPHA1,ALPHA2
      WRITE(6,121)
  121 FORMAT(1H0,10X,27HUNKNOWN PARAMETER ESTIMATES)
      WRITE(6,122)OD
      WRITE(6,123)TU
      WRITE(6,124)TL
      WRITE(6,125)H
      WRITE(6,126)TF
      WRITE(6,127)TW
      WRITE(6,128)IDL
      WRITE(6,131)WID
      WRITE(6,132)ALPHA1
      WRITE(6,133)ALPHA2
C
C     CALCULATE ESTIMATED WEIGHT
C
      PI=3.1416
      WT=.25*PI*(TU*(OD**2-IDU**2)+TL*(OD**2-IDL**2))+FLOAT(N)*(2.*H*TW*
     1((SPAN-OD)*0.5+0.50*(OD-IDU)-TW)-TW*(ALPHA1+ALPHA2)*(0.5*(SPAN-OD)
     2)**2+TF*0.5*(SPAN-OD)*WID*(SQRT(1.+ALPHA1**2)+SQRT(1.+ALPHA2**2)))
      WT=0.283*WT
C
C     CALCULATE MAXIMUM HORIZONTAL AND VERTICAL REACTIONS UNDER SCF
C
      SUM1=0.
      SUM2=-1.
      JJ=(N+2)/4
      DO 4 I1=1,N
    4 SUM1=SUM1+ABS(COS((2.*PI/FLOAT(N))*(FLOAT(I1)-1.)))
      RV=2.*FSC*HI/(SPAN*SUM1)
      DO 5 I2=1,JJ
    5 SUM2=SUM2+2.*(COS((2.*PI/FLOAT(N))*(FLOAT(I2)-1.)))**2
      RH=FSC/SUM2
C
C     CALCULATE INITIAL VALUE OF P
C
      W=HTHR+SL
      P=(W+WT)/FLOAT(N)
      WRITE(6,141)
```

```
      WRITE(6,142)WT
      WRITE(6,143)RV
      WRITE(6,144)RH
      WRITE(6,145)P
      IF(NNN.GT.1) GO TO 361
C
C     CALCULATE FACTORS FOR RINGS
C
      ALPHA=PI/FLOAT(N)
      C(1)=0.5*(1./ALPHA-COS(ALPHA)/SIN(ALPHA))
      C(2)=0.5*(1./SIN(ALPHA)-1./ALPHA)
      C(4)=0.5/SIN(ALPHA)
      C(3)=C(4)*COS(ALPHA)
      ANGLE=ALPHA+ALPHA
      C(5)=C(4)*(0.25*SIN(ANGLE)+0.5*ALPHA)/SIN(ALPHA)-0.5/ALPHA
      C(6)=C(5)+0.5/ALPHA
      C(7)=C(6)-C(3)
      DO 146 JINT=1,7
      IF(C(JINT).LT.0.0) C(JINT)=-C(JINT)
  146 CONTINUE
      B(1)=0.100
      B(2)=-1.35*OS
      B(3)=0.0
      B(4)=0.0
      B(5)=0.0
      B(6)=SY/FS
      B(7)=B(6)
      B(8)=B(7)
      B(9)=B(8)
      B(10)=B(6)/2.
      B(11)=0.5*SY/FSE
      B(12)=B(10)
      B(13)=B(11)
      B(14)=0.0
      B(15)=B(6)
      B(16)=SY/FSE
      B(17)=B(15)
      B(18)=0.0
      B(19)=HOMAX
      B(20)=HRMAX
      B(21)=-HRMIN
      B(22)=0.0
      WRITE(6,160)
      WRITE(6,164)B(1)
      QRS=-B(2)
      WRITE(6,167)QRS
      WRITE(6,161)B(6)
      WRITE(6,162)B(10)
      WRITE(6,165)B(16)
      WRITE(6,166)B(11)
```

```
      WRITE(6,450)
      WRITE(6,168)
      WRITE(6,169)
      WRITE(6,450)
      WRITE(6,170)
      WRITE(6,171)
      WRITE(6,450)
      WRITE(6,172)
      WRITE(6,173)
C
C               OPTIMIZATION ROUTINE
C
  361 CONTINUE
      X(1,1)=OD
      X(2,1)=TU
      X(3,1)=TL
      X(4,1)=H
      X(5,1)=TF
      X(6,1)=TW
      X(7,1)=IDL
      X(8,1)=WID
      X(9,1)=ALPHA1
      X(10,1)=ALPHA2
      IF(NNN.GT.1) GO TO 353
C
C     DX(I) IS THE STEP LENGTH FOR PARAMETER (I)
C
      READ(5,8)(DX(J2),J2=1,10)
      WRITE(6,370)
      DO 371 I98=1,10
      DXX(I98)=DX(I98)
      WRITE(6,372) I98,DX(I98)
  371 CONTINUE
  353 CONTINUE
      WRITE(6,430)
      IF(HRMAX.EQ.HRMIN) DX(4)=0.0
      DO 350 L33=1,10
      IF(RANGE(L33,1).EQ.RANGE(L33,2)) GO TO 351
      GO TO 352
  351 CONTINUE
      DX(L33)=0.0
      X(L33,1)=RANGE(L33,1)
      GO TO 350
  352 CONTINUE
      IF(X(L33,1).LT.RANGE(L33,1).OR.X(L33,1).GT.RANGE(L33,2)) X(L33,1)=
     10.5*(RANGE(L33,1)+RANGE(L33,2))
  350 CONTINUE
      DO 7 J1=1,10
    7 Z(J1)=X(J1,1)
      M=1
```

```
      CALL CHECK
    9 CONTINUE
      DO 10 I4=1,10
      M=I4+1
      X(I4,2)=X(I4,1)-DX(I4)
      Z(I4)=X(I4,2)
      CALL CHECK
      IF(U(I4+1).LT.U(I4)) GO TO 10
      X(I4,2)=X(I4,1)+DX(I4)
      Z(I4)=X(I4,2)
      CALL CHECK
      IF(U(I4+1).LT.U(I4)) GO TO 10
      X(I4,2)=X(I4,1)
      Z(I4)=X(I4,2)
      U(I4+1)=U(I4)
   10 CONTINUE
      NNN=NNN+1
      WRITE(6,205)NNN,U(11)
      IF(NNN.GT.250) GO TO 971
C
C     AT THIS POINT THE EXECUTION OF THE PROGRAM HAS OBTAINED A MINIMUM
C     U AFTER THE FIRST SEARCH
C
      IF(U(11).GE.0.99995*U(1)) GO TO 17
      DO 11 I5=1,10
      BETA(I5)=X(I5,2)-X(I5,1)
      X(I5,3)=X(I5,2)+BETA(I5)
   11 Z(I5)=X(I5,3)
C
C     THE X(I5,3) ARE THE COORDINATES AFTER THE FIRST MOVE
C     CALCULATE A NEW VALUE OF U
C
   12 CONTINUE
      M=12
      CALL CHECK
      DO 13 I6=1,10
      M=I6+12
      X(I6,4)=X(I6,3)-DX(I6)
      Z(I6)=X(I6,4)
      CALL CHECK
      IF(U(I6+12).LT.U(I6+11)) GO TO 13
      X(I6,4)=X(I6,3)+DX(I6)
      Z(I6)=X(I6,4)
      CALL CHECK
      IF(U(I6+12).LT.U(I6+11)) GO TO 13
      X(I6,4)=X(I6,3)
      Z(I6)=X(I6,4)
      U(I6+12)=U(I6+11)
   13 CONTINUE
      NNN=NNN+1
```

```
      WRITE(6,206)NNN,U(22)
      IF(NNN.GT.250) GO TO 971
C
C     AT THIS POINT A SECOND SEARCH STARTING FROM THE END OF THE LAST
C     MOVE HAS BEEN COMPLETED
C
      IF(U(22).LT.0.999*U(11)) GO TO 14
      DO 15 I7=1,10
      X(I7,1)=X(I7,2)
   15 Z(I7)=X(I7,1)
      U(1)=U(11)
      GO TO 9
   14 CONTINUE
      DO 16 I8=1,10
      BETA(I8)=X(I8,4)-X(I8,2)
      X(I8,2)=X(I8,4)
      X(I8,3)=X(I8,4)+BETA(I8)
   16 Z(I8)=X(I8,3)
      U(11)=U(22)
      GO TO 12
   17 CONTINUE
      M=30
      CALL CHECK
      DO 180 N44=1,10
  180 ZINT(N44)=Z(N44)
      UINT=U(30)
      U(1)=UINT
C
C     BEST POINT FROM DIRECT SEARCH IS IN INTERMEDIATE STORAGE
C
C     START LINEAR APPROXIMATION METHOD
      WRITE(6,40)
   40 FORMAT(1H0,10X,29HOPTIMIZATION IN SIMPLEX STAGE)
C
      DIMENSION COEFF(50,10),UCOEFF(10)
      DIMENSION XMATRX(50,80),RHS(50),CONST(80),USIMP(1)
C
C     CALCULATE NUMERICAL DERIVATIVES
C
   45 CONTINUE
      NCALL=NCALL+1
      IF(NCALL.GT.NCLIM) GO TO 971
      WRITE(6,799) NCALL
  799 FORMAT(1H0,10X,6HNCALL=,I5)
      M=50
      CALL EVAL(COEFF,UCOEFF,PHI,M,Z,U,DX,HRMAX,SPAN)
C
C     GENERATE SIMPLEX MATRIX
C
      CALL XMAT(XMATRX,RHS,CONST,USIMP,COEFF,UCOEFF,PHI,B,Z,ZLIM,U)
```

```
      DO 775 JIG=21,62
  775 CONST(JIG)=0.0
C
C     SOLVE SIMPLEX PROBLEM
      DIMENSION XSIMP(80),JH(80)
      DO 777 J=1,42
      JII=J+20
      ABA=ABS(RHS(J))
      IF(ABA.LT.1.E-06) RHS(J)=0.0
      XSIMP(JII)=RHS(J)
  777 JH(J)=JII
      MREAL=20
      MM=42
      ITER=200
      NM=62
      INDEX=0
      NUMBER=0
      DO 776 J=1,20
  776 XSIMP(J)=0.0
      CALL SIMPLX (XMATRX,RHS,CONST,NUMBER,NM,MM,MREAL,INDEX,XSIMP,ITER,
     1JH,CONST)
      WRITE(6,450)
      DO 30 J=1,10
      JX=J*2
      BETA(J)=XSIMP(JX-1)-XSIMP(JX)
      Z(J)=Z(J)+BETA(J)
      X(J,1)=Z(J)
      XMEM(J)=Z(J)
   30 CONTINUE
  600 CONTINUE
      M=31
      CALL CHECK
      IF(U(31).LT.U(30)) GO TO 31
      WRITE(6,83) U(31)
   83 FORMAT(1H0,10X,48HSIMPLEX SOLUTION UNSUCCESSFUL..........U(31)=
     1,E14.6,4H LB.)
      DIMENSION NUM(50)
   46 CONTINUE
      DO 75 J=1,42
      NUM(J)=0
      IF(PHI(J).GT.B(J)) GO TO 76
      GO TO 75
   76 CONTINUE
      NUM(J)=1
      WRITE(6,77) J
   77 FORMAT(1H0,10X,5HLIMIT,I3,1X,8HEXCEEDED)
   75 CONTINUE
      M=32
      CALL CHECK2
      IF(U(32).LT.0.9995*U(30)) GO TO 80
```

```
      NCALL=NCLIM
  706 CONTINUE
      DO 705 J=1,10
      Z(J)=Z(J)-BETA(J)
      X(J,1)=Z(J)
  705 CONTINUE
      GO TO 971
   80 CONTINUE
      WRITE(6,81) U(32)
   81 FORMAT(1H0,10X,20HACTUAL VALUE OF U IS,1X,E14.6,4H LB.)
C
      U(35)=U(31)
  270 CONTINUE
      DO 258 I4=1,10
      M=I4+35
      X(I4,2)=X(I4,1)-DX(I4)
      Z(I4)=X(I4,2)
      CALL CHECK
      IF(U(M).LT.U(M-1)) GO TO 258
      X(I4,2)=X(I4,1)+DX(I4)
      Z(I4)=X(I4,2)
      CALL CHECK
      IF(U(M).LT.U(M-1)) GO TO 258
      X(I4,2)=X(I4,1)
      Z(I4)=X(I4,2)
      U(M)=U(M-1)
  258 CONTINUE
      NNN=NNN+1
      IF(NNN.GT.250) GO TO 971
      IF(U(45).LT.U(30)) GO TO 262
      IF(U(45).LT.U(35)) GO TO 259
      GO TO 260
  262 U(30)=U(45)
      DO 261 J=1,10
  261 X(J,1)=X(J,2)
      WRITE(6,273) NNN,U(45)
  273 FORMAT(1H0,4HNNN=,I4,10X,6HU(45)=,E14.6,3HLB.)
      GO TO 45
  259 CONTINUE
      DO 675 I5=1,10
      RETA(I5)=X(I5,2)-X(I5,1)
      X(I5,3)=X(I5,2)+RETA(I5)
  675 CONTINUE
  676 CONTINUE
      M=29
      CALL CHECK
      DO 677 I6=1,10
      M=29-I6
      X(I6,4)=X(I6,3)-DX(I6)
      Z(I6)=X(I6,4)
```

```
      CALL CHECK
      IF(U(M).LT.U(M+1)) GO TO 677
      X(I6,4)=X(I6,3)+DX(I6)
      Z(I6)=X(I6,4)
      CALL CHECK
      IF(U(M).LT.U(M+1)) GO TO 677
      X(I6,4)=X(I6,3)
      Z(I6)=X(I6,4)
      U(M)=U(M+1)
  677 CONTINUE
      NNN=NNN+1
      IF(NNN.GT.250) GO TO 971
      IF(U(19).LT.0.999*U(45)) GO TO 678
      DO 679 I7=1,10
      X(I7,1)=X(I7,2)
  679 Z(I7)=X(I7,1)
      U(35)=U(45)
      GO TO 270
  678 CONTINUE
      DO 680 I8=1,10
      RETA(I8)=X(I8,4)-X(I8,2)
      X(I8,2)=X(I8,4)
      X(I8,3)=X(I8,4)+RETA(I8)
  680 Z(I8)=X(I8,3)
      U(45)=U(19)
      GO TO 676
  260 CONTINUE
      DO 98 J=1,10
      Z(J)=XMEM(J)
      BETA(J)=BETA(J)/2.
      Z(J)=Z(J)-BETA(J)
      XMEM(J)=Z(J)
      X(J,1)=Z(J)
   98 CONTINUE
  272 CONTINUE
C
      WRITE(6,654)
  654 FORMAT(1H0,10X,17HSTEP SIZE REDUCED)
  655 CONTINUE
C
C
      DO 42 J=1,10
   42 DX(J)=DX(J)/2.
      IF(DX(1).LT.DXLIM*Z(1)) NCALL=NCLIM
      IF(NCALL.GE.NCLIM) GO TO 706
      GO TO 600
   31 CONTINUE
C
C     SIMPLEX SOLUTION OF LINEAR APPROXIMATION WAS SUCCESSFUL
C
```

```
      WRITE(6,32) U(31)
   32 FORMAT(1H0,20HSIMPLEX OPTIMUM.....,E14.6,1X,3HLB.)
C
C     MAKE PATTERN MOVES BASED ON SIMPLEX SOLUTION
C
      DO 33  J=1,15
      DO 34  JY=1,10
   34 Z(JY)=Z(JY)+BETA(JY)*FLOAT(J)
      M=J+31
      CALL CHECK
      IF(U(M).LT.U(M-1)) GO TO 35
      GO TO 36
   35 CONTINUE
      WRITE(6,37) J,U(M)
   37 FORMAT(1H0,12HPATTERN MOVE,I3,1X,10HSUCCESSFUL,10X,2HU=,E14.6,1X,3
     1HLB.)
      GO TO 33
   36 CONTINUE
      WRITE(6,38) J,U(M)
   38 FORMAT(1H0,12HPATTERN MOVE,I3,1X,12HUNSUCCESSFUL,8X,2HU=,E14.6,1X,
     13HLB.)
      WRITE(6,654)
      DO 39 JY=1,10
      DX(JY)=DX(JY)/2.
      Z(JY)=Z(JY)-BETA(JY)*FLOAT(J)
   39 X(JY,1)=Z(JY)
      IF(DX(1).LT.DXLIM*Z(1)) NCALL=NCLIM
C
C     RETURN TO DIRECT SEARCH METHOD
      M=30
      CALL CHECK
      GO TO 45
   33 CONTINUE
  772 CONTINUE
  971 CONTINUE
      M=1
      CALL CHECK
      WRITE(6,150)
      WRITE(6,122)Z(1)
      WRITE(6,123)Z(2)
      WRITE(6,124)Z(3)
      WRITE(6,125)Z(4)
      WRITE(6,126)Z(5)
      WRITE(6,127)Z(6)
      WRITE(6,128)Z(7)
      WRITE(6,131)Z(8)
      WRITE(6,132)Z(9)
      WRITE(6,133)Z(10)
      WRITE(6,151) U(M)
      DO 250 J=1,10
```

```
      IF(DX(J).NE.0.0) DX(J)=DXX(J)
  250 CONTINUE
      CALL SIZE (RANGE,Z,DX)
      DO 253 J=1,10
  253 X(J,1)=Z(J)
      DO 186 J=1,10
      IF(X(J,1).LT.RANGE(J,1)) X(J,1)=RANGE(J,1)
      IF(X(J,1).GT.RANGE(J,2)) X(J,1)=RANGE(J,2)
  186 CONTINUE
      IF(HRMAX.EQ.HRMIN) X(4,1)=HRMAX-X(2,1)-X(5,1)+X(10,1)*0.5*(SPAN-
     1X(1,1))
      M=1
      CALL CHECK
  251 CONTINUE
      DO 252 I4=1,10
      M=I4+1
      X(I4,2)=X(I4,1)-DX(I4)
      Z(I4)=X(I4,2)
      CALL CHECK
      IF(U(I4+1).LT.U(I4)) GO TO 252
      X(I4,2)=X(I4,1)+DX(I4)
      Z(I4)=X(I4,2)
      CALL CHECK
      IF(U(I4+1).LT.U(I4)) GO TO 252
      X(I4,2)=X(I4,1)
      Z(I4)=X(I4,2)
      U(I4+1)=U(I4)
  252 CONTINUE
      IF(U(11).LT.U(1)) GO TO 256
      GO TO 254
  256 CONTINUE
      U(1)=U(11)
      DO 255 J=1,10
  255 X(J,1)=X(J,2)
      GO TO 251
  254 CONTINUE
      M=1
      CALL CHECK
      WRITE(6,150)
      WRITE(6,122)Z(1)
      WRITE(6,123)Z(2)
      WRITE(6,124)Z(3)
      WRITE(6,125)Z(4)
      WRITE(6,126)Z(5)
      WRITE(6,127)Z(6)
      WRITE(6,128)Z(7)
      WRITE(6,131)Z(8)
      WRITE(6,132)Z(9)
      WRITE(6,133)Z(10)
      WRITE(6,151) U(M)
```

```
      IF(SUM5.GT.1.E-05) GO TO 580
      GO TO 581
  580 CONTINUE
      M=1
      CALL CHECK2
      WRITE(6,81) U(1)
      CALL CHECK
  581 CONTINUE
      WRITE(6,214)
      DO 302 M11=1,42
      WRITE(6,211)M11,PHI(M11),B(M11)
  302 CONTINUE
      IF(NNN.GT.1) GO TO 360
C
C     FORMAT STATEMENTS
C
    1 FORMAT(I5,5F10.5)
    2 FORMAT(5E10.5)
    3 FORMAT(8F10.5)
  101 FORMAT(1H0,20X,19HCONSTANT PARAMETERS)
  102 FORMAT(1H0,40HNUMBER OF ARMS..........................,10X,I4)
  115 FORMAT(1X,41HDISTANCE FROM LINE OF ACTION OF FSC TO   )
  120 FORMAT(1X,40H     PLANE OF SUPPORTS..................,F18.3,3HIN.)
  117 FORMAT(1X,40HTURBINE OVERSPEED.......................,F18.3,3HRPM)
  119 FORMAT(1X,40HDIAMETER OVER SUPPORT POINTS............,F18.3,3HIN.)
  103 FORMAT(1X,40HINTERNAL DIAMETER OF UPPER RING.........,F18.3,3HIN.)
  107 FORMAT(1X,40HHYDRAULIC THRUST........................,F18.3,3HLB.)
  111 FORMAT(1X,40HMAXIMUM STATIC LOAD.....................,F18.3,3HLB.)
  108 FORMAT(1X,40HMODULUS OF ELASTICITY...................,F18.3,3HPSI)
  109 FORMAT(1X,40HPOISSON'S RATIO.........................,F18.3)
  110 FORMAT(1X,40HPLATE YIELD STRENGTH....................,F18.3,3HPSI)
  112 FORMAT(1X,40HNORMAL FACTOR OF SAFETY.................,F18.3)
  113 FORMAT(1X,40HEMERGENCY FACTOR OF SAFETY..............,F18.3)
  114 FORMAT(1X,40HSHORT CIRCUIT FORCE.....................,F18.3,3HLB.)
  500 FORMAT(8F10.5)
  499 FORMAT(1H0,10X,20HRANGES FOR VARIABLES//)
  402 FORMAT(5X,F10.5,2X,4H.GE.,2X,2HZ(,I3,1H),2X,4H.LE.,F10.5)
  502 FORMAT(1H0,20X,22HBRACKET PROFILE LIMITS//)
  503 FORMAT(1X,40HMAXIMUM HEIGHT OF ARM AT SUPPORT........,F18.3,3HIN.)
  504 FORMAT(1X,40HMAXIMUM ELEVATION OF UPPER RING.........,F18.3,3HIN.)
  505 FORMAT(1X,40HMINIMUM ELEVATION OF UPPER RING.........,F18.3,3HIN.)
  506 FORMAT(1X,40HMAXIMUM OUTSIDE DIAMETER OF RINGS.......,F18.3,3HIN.)
  507 FORMAT(1X,40HMINIMUM OUTSIDE DIAMETER OF RINGS.......,F18.3,3HIN.)
  508 FORMAT(1X,40HMAXIMUM INSIDE DIAMETER OF LOWER RING...,F18.3,3HIN.)
  509 FORMAT(1X,40HMINIMUM INSIDE DIAMETER OF LOWER RING...,F18.3,3HIN.)
  510 FORMAT(1X,40HMAXIMUM SLOPE OF LOWER FLANGE...........,F18.3)
  511 FORMAT(1X,40HMINIMUM SLOPE OF LOWER FLANGE...........,F18.3)
  122 FORMAT(1H0,40HOUTSIDE DIAMETER OF RINGS...............,F18.3,3HIN.
     1)
  123 FORMAT(1X,40HUPPER RING THICKNESS....................,F18.3,3HIN.)
```

```
  124 FORMAT(1X,40HLOWER RING THICKNESS....................,F18.3,3HIN.)
  125 FORMAT(1X,40HDISTANCE BETWEEN RINGS..................,F18.3,3HIN.)
  126 FORMAT(1X,40HBEAM FLANGE THICKNESS...................,F18.3,3HIN.)
  127 FORMAT(1X,40HBEAM WEB THICKNESS......................,F18.3,3HIN.)
  128 FORMAT(1X,40HINTERNAL DIAMETER OF LOWER RING.........,F18.3,3HIN.)
  131 FORMAT(1X,40HWIDTH OF BEAM FLANGE....................,F18.3,3HIN.)
  132 FORMAT(1X,40HSLOPE OF UPPER FLANGE OF BEAM...........,F18.3)
  133 FORMAT(1X,40HSLOPE OF LOWER FLANGE OF BEAM...........,F18.3)
  141 FORMAT(1H0,20X,16HCALCULATED TERMS)
  142 FORMAT(1H0,40HINITIAL WEIGHT..........................,F18.3,3HLB.
     1)
  143 FORMAT(1X,40HMAXIMUM VERTICAL REACTION DUE TO SCF....,F18.3,3HLB.)
  144 FORMAT(1X,40HMAXIMUM HORIZONTAL REACTION DUE TO SCF..,F18.3,3HLB.)
  145 FORMAT(1X,40HINITIAL NORMAL VERTICAL REACTION........,F18.3,3HLB.)
  160 FORMAT(1H0,20X,6HLIMITS//)
  164 FORMAT(1X,40HMAXIMUM ALLOWABLE STRUCTURE DEFLECTION..,F18.3,3HIN.)
  167 FORMAT(1X,40HBRACKET CRITICAL FREQUENCY LIMIT........,F18.3,3HCPM)
  161 FORMAT(1X,40HMAXIMUM NORMAL TENSILE STRESS...........,F18.3,3HPSI)
  162 FORMAT(1X,40HMAXIMUM NORMAL SHEAR STRESS.............,F18.3,3HPSI)
  165 FORMAT(1X,40HMAXIMUM EMERGENCY TENSILE STRESS........,F18.3,3HPSI)
  166 FORMAT(1X,40HMAXIMUM EMERGENCY SHEAR STRESS..........,F18.3,3HPSI)
  450 FORMAT(1H0)
  168 FORMAT(1X,77HMAXIMUM STRESS IN COMPRESSION FLANGE OF BEAM (LATERAL
     1 BUCKLING LIMIT)=0.61*SY)
  169 FORMAT(10X,84HOR 12'000'000 PSI*(WID*TF)/(2.*L*CO), WHICHEVER IS L
     1ESS (CSA S16-1961 CLAUSE 12.4.1))
  170 FORMAT(1X,65HMAXIMUM WEB SHEAR IN BEAM=0.40*SY OR 64'000'000 PSI*(
     12.*TW/H)**2,)
  171 FORMAT(10X,44HWHICHEVER IS LESS (CSA S16-1961 CLAUSE 12.5))
  172 FORMAT(1X,58HMAXIMUM STRESS IN COMPRESSION FLANGE OF ARM TO LIMIT
     1LOCAL)
  173 FORMAT(10X,38HBUCKLING=KC*E(TF/WID)**2, WHERE KC=6.3)
  370 FORMAT(1H0,10X,26HSTEP LENGTHS FOR VARIABLES//)
  372 FORMAT(15X,3HDX(,I3,2H)=,F10.6)
    8 FORMAT(8F10.5)
  430 FORMAT(1H0,20X,12HOPTIMIZATION//)
  205 FORMAT(1H0,4HNNN=,I4,10X,6HU(11)=,E14.6,3HLB.)
  206 FORMAT(1H0,4HNNN=,I4,10X,6HU(22)=,E14.6,3HLB.)
  939 FORMAT(1H0,19X,5HU(1)=,E14.6,3HLB.)
  410 FORMAT(2I10)
  150 FORMAT(1H0,20X,16HOPTIMUM SOLUTION)
  151 FORMAT(1H0,40HMINIMUM WEIGHT..........................,F18.3,3HLB.
     1)
  214 FORMAT(1H0,20X,18HFINAL CALCULATIONS/)
  211 FORMAT(1X,4HPHI(,I3,2H)=,F18.3,5X,4H.LE.,4X,F18.3)
  306 FORMAT(1X,4HPHI(,I3,2H)=,F18.3,5X,4H.GE.,4X,F18.3)
      STOP
      END
```

```
$IBFTC EVAL
      SUBROUTINE  EVAL(COEFF,UCOEFF,PHI,M,Z,U,DX,HRMAX,SPAN)
C
C     SUBROUTINE FOR EVALUATING NUMERICAL DERIVATIVES
C
      DIMENSION DZ(10,3),DPHI(50,3),DU(3),COEFF(50,10),UCOEFF(10),
     1PHI(50),Z(15),U(50)
      DIMENSION DX(15)
      DO 801 J=1,42
  801 DPHI(J,2)=PHI(J)
      DU(2)=U(30)
      DO 802 J=1,10
      X=Z(J)*0.001
      IF(DX(J).EQ.0.0) X=0.0
      Z(J)=Z(J)+X
      IF(DX(4).EQ.0.0) Z(4)=HRMAX-Z(2)-Z(5)+Z(10)*0.5*(SPAN-Z(1))
      CALL CHECK2
      DO 803 JJ=1,42
  803 DPHI(JJ,1)=PHI(JJ)
      DU(1)=U(M)
      Z(J)=Z(J)-X-X
      IF(DX(4).EQ.0.0) Z(4)=HRMAX-Z(2)-Z(5)+Z(10)*0.5*(SPAN-Z(1))
      CALL CHECK2
      Z(J)=Z(J)+X
      IF(DX(4).EQ.0.0) Z(4)=HRMAX-Z(2)-Z(5)+Z(10)*0.5*(SPAN-Z(1))
      DO 804 JJ=1,42
  804 DPHI(JJ,3)=PHI(JJ)
      DU(3)=U(M)
      UCOEFF(J)=DU(1)-DU(3)
      IF(UCOEFF(J).EQ.0.0) GO TO 809
      UCOEFF(J)=UCOEFF(J)*500./Z(J)
  809 CONTINUE
      DO 805 JJ=1,42
      COEFF(JJ,J)=DPHI(JJ,1)-DPHI(JJ,3)
      IF(COEFF(JJ,J).EQ.0.0) GO TO 805
      COEFF(JJ,J)=COEFF(JJ,J)*500./Z(J)
  805 CONTINUE
  802 CONTINUE
C
C     NUMERICAL DERIVATIVES HAVE BEEN CALCULATED
C
      RETURN
      END
```

```
$IBFTC XMAT
      SUBROUTINE XMAT(XMATRX,RHS,CONST,USIMP,COEFF,UCOEFF,PHI,B,Z,ZLIM,
     1U)
      DIMENSION XMATRX(50,80),RHS(50),CONST(80),USIMP(1)
      DIMENSION PHI(50),B(50),Z(15),COEFF(50,10),UCOEFF(10),U(50)
C     GENERATE SIMPLEX MATRIX
C
      DO 810 J=1,42
      DO 811 JJ=21,62
      XMATRX(J,JJ)=0.0
      IF((J+20).EQ.JJ) XMATRX(J,JJ)=10.
  811 CONTINUE
      DO 812 JJ=1,10
      JJJ=JJ*2
      JJK=JJJ-1
      XMATRX(J,JJK)=COEFF(J,JJ)
      XMATRX(J,JJJ)=-COEFF(J,JJ)
  812 CONTINUE
  810 CONTINUE
      DO 813 J=1,10
      JJJ=J*2
      JJK=JJJ-1
      CONST(JJK)=UCOEFF(J)
  813 CONST(JJJ)=-UCOEFF(J)
C
C     EVALUATE LIMITS ON VARIABLES
C
      DIMENSION ZLIM(20),ZZZ(20)
C
C     ZLIM REPRESENTS THE PERCENTAGE VARIATION IN THE Z(I) WHICH
C     DOES NOT CAUSE AN APPROXIMATING ERROR IN U OR ANY PHI(I) GREATER
C     THAN 0.1 PERCENT DEVIATION FROM THE ACTUAL VALUE
C
      DO 814 J=1,42
  814 RHS(J)=B(J)-PHI(J)
      USIMP(1)=U(30)-U(30)
      DO 815 J=23,32
      NEW=J-22
      ZZZ(NEW)=ZLIM(NEW)*Z(NEW)
      IF(ZZZ(NEW).LT.RHS(J)) RHS(J)=ZZZ(NEW)
  815 CONTINUE
      DO 816 J=33,42
      NEW=J-22
      NNEW=J-32
      ZZZ(NEW)=ZLIM(NEW)*Z(NNEW)
      IF(ZZZ(NEW).LT.RHS(J)) RHS(J)=ZZZ(NEW)
  816 CONTINUE
      RETURN
      END
```

```
$IBFTC SIMP
      SUBROUTINE SIMPLX(A,B,C,NN,N,M,MM,INDEX,X,NMAX,II,S)
      DIMENSION A(50,80),B(50),C(50),II(80),X(80),S(80)
C
C
C     PHASE 1 OR 2 OF LINEAR PROGRAMING STANDARD SIMPLEX
      NCYCLE = 1
C     INDEX =0 FOR PHASE 2 INDEX =1 FOR PHASE 1
      IF (INDEX.NE.1) GO TO 8
C
C     CALCULATION OF ALLC(J) FOR VARIABLES NOT IN BASIS
C
      MM=N-M
      MMM=M+1-NN
      DO 5 J=1,MM
      C(J)=0.
      DO 5 I=MMM,M
    5 C(J)= C(J)-A(I,J)
C
C     SET C(J) = 1.E10 FOR VARIABLES IN BASIS
C
      MA=MM+1
      DO4 J=MA,N
    4 C(J)=1.E10
C
C     CALCULATE INITIAL U0
C
      U0=0.
      DO 6 I=MMM,M
    6 U0=U0+B(I)
       GO TO 9
   8    MB=M+1
      DO 12 J=1,N
   12 C(J) =S(J)
      U0=0.0
C     SELECT SMALL C(J) WHICH IS C(L)
C
    9 SMALL=C(1)
      L=1
      DO 10 I=2,N
       IF ( C(I).GE.SMALL) GO TO 10
       SMALL=C(I)
      L=I
   10 CONTINUE
C
C     TESTING FOR OPTIMUM  NOTE ALLOWANCE FOR ROUND OFF ERROR
      IF(C(L)+1.E-5.GE.0.) GO TO 100
C
C     TESTING FOR FINITE OPTIMUM   ALLOWANCE FOR ROUND OFF ERROR
C
```

```
      DO 15 I=1,M
       IF(A(I,L).GT.1.E-5) GO TO 16
   15 CONTINUE
      WRITE(6,210)
       GO TO 101
C
C     SELECT SMALLEST RATIO FOR WHICH A(I,L) GT.0. GIVING EQN.(LL)
C     IN WHICH VARIABLE IS DROPPED
C
  16   SMALL = +1.0E+10
      LL=1
      DO 18 I=1,M
       IF (A(I,L).LE.1.E-5) GO TO18
      IF(B(I)/A(I,L).GT.SMALL) GO TO 18
       SMALL=B(I)/A(I,L)
      LL=I
   18 CONTINUE
C
C     BRINGING C(K) BACK TO 0 BEFORE CONVERTING TO NEW CANNONICAL FORM
      K = II(LL)
      C(K)=0.
C
C      CONVERTING TO NEW CANONICAL FORM
C
      B(LL)=B(LL)/A(LL,L)
      UO=UO+B(LL)*C(L)
      DO 30 J=1,N
      IF(J.EQ.L) GO TO 30
      A(LL,J)=A(LL,J)/A(LL,L)
      C(J)=C(J)-A(LL,J)*C(L)
   30 CONTINUE
      A(LL,L)=1.
      DO 33 I=1,M
      IF(I.EQ.LL) GO TO 33
      Y=A(I,L)
      B(I)= B(I)-B(LL)*A(I,L)
      DO 31 J=1,N
   31 A(I,J)=A(I,J)-A(LL,J)*Y
   33 CONTINUE
C
C     SWITCH BASIS TAGS ON LL EQN.
C
      C(L) =1.E10
      KK=II(LL)
      II(LL)=L
C
C     SETTING OLD VARIABLE IN BASIS =0
      X(KK)=0.
C
C      RECORD NEW VALUES OF X IN MEMORY. VARIABLES NOT IN BASIS ARE
```

```
C     ALREADY 0 IN MEMORY
C
      DO 40 I=1,M
      K=II(I)
   40 X(K)=B(I)
C
C     ITERATION COMMAND
C
      NCYCLE = NCYCLE + 1
      IF(NCYCLE.EQ.NMAX) GO TO 110
      GO TO 9
C
C      OUTPUT
  100 CONTINUE
      IF(INDEX.NE.1) GO TO 101
C
C     CALCULATION OF CANONICAL FORM OF OPT. EQN.
 102  N = N-NN
      MC=M+1
      DO 94 J=MC,N
   94 S(J) = 0.0
      DO 95 J = 1,N
   95 C(J) = S(J)
      U0=0.
      DO 90 I=1,M
      K=II(I)
      Q=C(K)
      U0=U0+B(I)*Q
      DO 90 J=1,N
   90 C(J)=C(J)-A(I,J)*Q
      INDEX = 0
      DO 91 I=1,M
      K = II(I)
   91 C(K) = 1.E10
        GO TO 9
  101 RETURN
  110 WRITE(6,211) NCYCLE
 111  STOP
  200 FORMAT(2X,4HU0= ,E11.5)
  201 FORMAT(2X,8HA MATRIX,/,(1X,10F11.5))
  202 FORMAT(2X,22HVARIABLES IN BASIS ARE,/,(2X,30I3) )
  206 FORMAT(2X,28HPHASE II OF SIMPLEX SOLUTION,//)
  208 FORMAT(2X,8HC MATRIX,/,(2X,8E13.5))
  210 FORMAT(2X,17HNO FINITE OPTIMUM)
  211 FORMAT(2X,30HPROCESS DID NOT CONVERGE AFTER,2X,I8,2X,6HCYCLES)
      END
```

```
$IBFTC CHECK
      SUBROUTINE CHECK
      DIMENSION C(7),B(50),Z(15),U(50),PHI(50)
      DIMENSION RANGE(15,2)
      REAL IDU,IDL,L,K,IO,IL
      REAL MU,LL,IDLMAX,IDLMIN
      COMMON B,C,Z,U,PHI,SPAN,IDU,PI,N,E,SL,HTHR,MU,RV,P,RH,SY,FS,FSE
      COMMON DELTAB,DELTAS,DELTAU,DELTAL
      COMMON SUM5,M
      COMMON HOMAX,HRMAX,HRMIN,ODMAX,ODMIN,IDLMAX,IDLMIN,A2MAX,A2MIN
      COMMON RANGE
C
C             CALCULATED TERMS
C
C        L=BEAM LENGTH
C        RU=RADIUS TO GRAVITY CENTRE OF UPPER RING
C        ARU=CROSS-SECTIONAL AREA OF UPPER RING
C        DU=DISPLACEMENT OF NA OF UPPER RING FROM GRAVITY CENTRE
C        YU=RADIAL DISTANCE FROM GRAVITY CENTRE OF UPPER RING TO OUTER
C           EDGE
C        RGU=RADIUS OF GYRATION OF UPPER RING
C        RL=RADIUS TO GRAVITY CENTRE OF LOWER RING
C        ARL=CROSS-SECTIONAL AREA OF LOWER RING
C        YL=RADIAL DISTANCE FROM GRAVITY CENTRE OF LOWER RING TO OUTER
C           EDGE
C        DL=DISPLACEMENT OF NA OF LOWER RING FROM GRAVITY CENTRE
C        RGL=RADIUS OF GRYATION OF LOWER RING
C        ALPHA=ONE-HALF THE ANGLE BETWEEN ARMS
C        K=1.5
C           TORRU=TORSIONAL RIGIDITY OF UPPER RING
C           BENDRU=BENDING RIGIDITY OF UPPER RING IN RING PLANE
C
C     CALCULATION OF CONSTANT TERMS
C
      L=0.5*(SPAN-Z(1))
      IF(HRMAX.EQ.HRMIN) Z(4)=HRMAX-Z(2)-Z(5)+Z(10)*L
      A1=0.5*(Z(4)+Z(5))
      IDL=Z(7)
      RU=0.25*(Z(1)+IDU)
      ARU=0.5*Z(2)*(Z(1)-IDU)
      IF(Z(1).LT.0.0) GO TO 29
      DU=RU-0.5*(Z(1)-IDU)/ALOG(Z(1)/IDU)
      YU=0.25*(Z(1)-IDU)
      RGU=YU/1.732
      RL=0.25*(Z(1)+IDL)
      ARL=0.5*Z(3)*(Z(1)-IDL)
      DL=RL-0.5*(Z(1)-IDL)/ALOG(Z(1)/IDL)
      YL=0.25*(Z(1)-IDL)
      RGL=YL/1.732
      ALPHA=PI/FLOAT(N)
```

```
      K=1.5
      TORRU=2.*YU*(Z(2)**3)*(1.-0.63*Z(2)/(2.*YU))*E/7.8
      BENDRU=2.*YU*(Z(2)**3)*E/12.
C
C     CALCULATE OPTIMIZATION FUNCTION
C
      RNGWTU=0.25*PI*Z(2)*(Z(1)+IDU)*(Z(1)-IDU)
      RNGWTL=0.25*PI*Z(3)*(Z(1)+IDL)*(Z(1)-IDL)
      FLNGWT=FLOAT(N)*Z(8)*L*Z(5)*(SQRT(1.+Z(9)**2)+SQRT(1.+Z(10)**2))
      WEBWT=2.*FLOAT(N)*Z(6)*(Z(4)*(L+2.*YU-Z(6))-0.5*(Z(9)+Z(10))*L**2)
      U(M)=0.283*(RNGWTU+RNGWTL+FLNGWT+WEBWT)
      P=(SL+HTHR+U(M))/FLOAT(N)
C
C     THE PHI(I) ARE THE STRESSES IN AND THE DEFLECTION OF THE STRUCTURE
C     CALCULATE DEFLECTIONS
C     CALCULATION OF RADIAL RING DEFLECTIONS
C     XXX=RADIAL DISTANCE FROM POINT OF APPLICATION OF LOAD
C        ON UPPER RING TO SUPPORT POINT (LOAD IS APPLIED TO
C        BRACKET BY BASE RING)
C
      XXX=0.5*(SPAN-IDLMIN)-2.
      DELTAU=(P*XXX/(A1+A1))*(RU/(E*ARU))*(((RU/RGU)**2)*C(5)*(1.-2.*DU/
     1RU)+C(6)-0.5*DU/(ALPHA*RU)+2.6*K*C(7))
      DELTAL=(P*XXX/(A1+A1))*(RL/(E*ARL))*(((RL/RGL)**2)*C(5)*(1.-2.*DL/
     1RL)+C(6)-0.5*DL/(ALPHA*RL)+2.6*K*C(7))
C
C     CALCULATE ARM DEFLECTIONS
C     THESE ARE NEW FORMULAE
C
      BETA1=ATAN(Z(9))
      BETA2=ATAN(Z(10))
      BETA3=0.5*(BETA1-BETA2)
      BETA4=0.5*(BETA1+BETA2)
      HO=Z(4)-(Z(9)+Z(10))*L
      HOP=HO*COS(BETA3)
      UU=Z(5)/COS(BETA4)
      P1=P*COS(BETA3)
      P2=P*SIN(BETA3)
      LL=L/COS(BETA3)
      IO=(Z(6)*(HOP+UU)+3.*(Z(8)-Z(6))*UU)*((HOP+UU)**2)/6.
      DEE=(Z(9)+Z(10))/(HOP+UU)
      EEE=Z(6)*(Z(9)+Z(10))/(Z(6)*(HOP+UU)+3.*(Z(8)-Z(6))*UU)
      RV1=RV*COS(BETA3)
      RV2=RV*SIN(BETA3)
      RH1=-RH*SIN(BETA3)
      RH2=RH*COS(BETA3)
      G=0.5*E/(1.+MU)
      DELTAC=P2*LL/(E*(2.*Z(8)*UU+Z(6)*(HOP+LL*(Z(9)+Z(10)))))
      HL=HOP+(Z(9)+Z(10))*LL
      IL=IO*(1.+EEE*LL)*(1.+DEE*LL)**2
```

```
      DELTAS=P1*LL*(0.25*HL**2+0.50*Z(8)*(HL*UU+UU**2)/Z(6))/(2.*G*IL)
      RATIO=IL/IO
      IF(RATIO.LT.1.1) GO TO 600
      GO TO 601
  600 CONTINUE
      DELTAB=P1*LL**3/(3.*E*IO)
      GO TO 602
  601 DELTAB=P1*(LL/(DEE*(DEE-EEE)*(1.+DEE*LL))+ALOG(1.+EEE*LL)/(EEE*
     1(EEE-DEE)**2)+(EEE-DEE-DEE)*ALOG(1.+DEE*LL)/(((DEE)**2)*(EEE-DEE)
     2**2))/(E*IO)
  602 CONTINUE
      DELTAV=(DELTAB+DELTAS)*COS(BETA3)+DELTAC*SIN(BETA3)
C
C     MAXIMUM DEFLECTION OF BASE RING
C
      DELTA=XXX*(DELTAU+DELTAL)/(Z(4)+0.5*(Z(2)+Z(3)))+DELTAV
C
C         BRACKET STATIC DEFLECTION
C
      STADEF=DELTA*(SL+U(M))/(SL+HTHR+U(M))
      IF(STADEF.LT.0.0) GO TO 29
      PHI(1)=DELTA
C         BRACKET VERTICAL FREQUENCY
      XNS=187.7/SQRT(STADEF)
      PHI(2)=-XNS
C
C         CRITICAL BUCKLING LOAD FOR UPPER RING
C
      RT1=RU+YU
      IF(RT1.LT.0.0) GO TO 29
      IF(RU.LT.0.0) GO TO 29
      PCRU=2.*ALPHA*(BENDRU*PI**2/(RU*4.*ALPHA**2)+TORRU*(SQRT(RU+YU)-
     1SQRT(RU))**2)/(RU**2)
      PCRU=PCRU/3.
      PHI(3)=P*XXX/(A1+A1)-PCRU
      PHI(4)=-Z(3)+Z(2)-1.000001
      PHI(5)=-Z(9)-Z(10)
C
C         STRESSES IN RINGS UNDER NORMAL CONDITIONS
C
      P5=P*XXX/(A1+A1)
      PHI(6)=(P5/ARU)*((RU/(DU*0.5*IDU))*(C(2)+0.25*DU/(ALPHA*RU))*(YU-
     1DU)+C(4))
      PHI(7)=(P5/ARU)*((RU/(DU*0.5*Z(1)))*(C(1)-0.25*DU/(ALPHA*RU))*(YU+
     1DU)+C(3))
      PHI(8)=(P5/ARL)*((RL/(DL*0.5*IDL))*(C(2)+0.25*DL/(ALPHA*RL))*(YL-
     1DL)+C(4))
      PHI(9)=(P5/ARL)*((RL/(DL*0.5*Z(1)))*(C(1)-0.25*DL/(ALPHA*RL))*(YL+
     1DL)+C(3))
C
```

```
C         ARM SHEAR STRESSES
C
      PHI(10)=(P1/(2.*IO))*(0.25*HOP**2+0.5*Z(8)*(HOP*UU+UU**2)/Z(6))
      PHI(11)=PHI(10)*(P1+RV1+RH1)/P1
      PHI(12)=P1*LL*(Z(9)+Z(10))*(HL+Z(8)*UU/Z(6))/(4.*IL)+P1*Z(8)*(
     1HL*UU+UU**2)*(0.25/IL)*(1.-LL*(DEE+EEE+2.*DEE*EEE*LL)/(1.+(EEE+DEE
     2)*LL+DEE*EEE*LL**2))
      PHI(13)=PHI(12)*(P1+RV1+RH1)/P1
      XLIM1=0.40*SY
      XLIM2=(64.E+06)*(2.*Z(6)/HL)**2
      IF(XLIM2.LT.XLIM1) XLIM1=XLIM2
      PHI(14)=PHI(11)-XLIM1
      IF(PHI(13).GT.PHI(14)) PHI(14)=PHI(13)-XLIM1
C
C         ARM BENDING STRESSES
C
      PHI(15)=0.0
      PHI(16)=0.0
      PHI(17)=0.0
      XDIV=LL/10.
      XX=-XDIV
      DO 25 JJK=1,11
      XX=XX+XDIV
      SIG1=P1*XX*0.5*(HOP+(Z(9)+Z(10))*XX+2.*UU)/(IO*(1.+EEE*XX)*(1.+DEE
     1*XX)**2)
      SIG2=0.5*P2/(Z(8)*UU+Z(6)*(HOP+(Z(9)+Z(10))*XX))
      SIG3=(SIG1+SIG2)/COS(BETA4)
      SIG4=SIG1*(P1+RV1+RH1)/P1
      SIG5=SIG2*(P2+RV2+RH2)/P2
      SIG6=(SIG4+SIG5)/COS(BETA4)
      SIG7=(SIG1-SIG2)/COS(BETA4)
      IF(SIG3.GT.PHI(15)) PHI(15)=SIG3
      IF(SIG6.GT.PHI(16)) PHI(16)=SIG6
      IF(SIG7.GT.PHI(17)) PHI(17)=SIG7
   25 CONTINUE
      TERM10=0.61*SY
      TERM11=(12.E+06)*Z(8)*Z(5)/(LL*(HL+UU+UU))
      IF(TERM11.LT.TERM10) TERM10=TERM11
      TERM12=6.3*E*(Z(5)/Z(8))**2
      IF(TERM12.LT.TERM10) TERM10=TERM12
      PHI(18)=PHI(16)-TERM10
C
C     PROFILE LIMITS
C
      HWEB=Z(4)-(Z(9)+Z(10))*L
      HO=HWEB+Z(5)+Z(5)
      SLOPE=(HRMAX-HOMAX)/(0.5*(SPAN-ODMAX))
      HBAR=HOMAX+SLOPE*L
      HEIGHT=HO-Z(5)+Z(9)*L+Z(2)
      PHI(19)=HO
```

```
      PHI(20)=HEIGHT
      PHI(21)=-HEIGHT
      PHI(22)=HEIGHT-HBAR
C
      SUM5=0.0
      DO 100 J5=1,10
      PHI(J5+22)=-Z(J5)
      PHI(J5+32)=Z(J5)
  100 CONTINUE
      DO 27 J4=1,42
      IF(PHI(J4).GT.B(J4)) SUM5=SUM5+PHI(J4)-B(J4)
   27 CONTINUE
      IF(SUM5.GT.0.0) U(M)=U(M)+(10.E+06)*SUM5
      USTORE=U(M)
      GO TO 30
   29 CONTINUE
      U(M)=USTORE*100.
   30 CONTINUE
      RETURN
      END
```

```
$IBFTC CHECK2
      SUBROUTINE CHECK2
      DIMENSION C(7),B(50),Z(15),U(50),PHI(50)
      REAL IDU,IDL,L,K,IO,IL
      REAL MU,LL,IDLMAX,IDLMIN
      COMMON B,C,Z,U,PHI,SPAN,IDU,PI,N,E,SL,HTHR,MU,RV,P,RH,SY,FS,FSE
      COMMON DELTAB,DELTAS,DELTAU,DELTAL
      COMMON SUM5,M
      COMMON HOMAX,HRMAX,HRMIN,ODMAX,ODMIN,IDLMAX,IDLMIN,A2MAX,A2MIN
C
C             CALCULATED TERMS
C
C        L=BEAM LENGTH
C        RU=RADIUS TO GRAVITY CENTRE OF UPPER RING
C        ARU=CROSS-SECTIONAL AREA OF UPPER RING
C        DU=DISPLACEMENT OF NA OF UPPER RING FROM GRAVITY CENTRE
C        YU=RADIAL DISTANCE FROM GRAVITY CENTRE OF UPPER RING TO OUTER
C           EDGE
C        RGU=RADIUS OF GYRATION OF UPPER RING
C        RL=RADIUS TO GRAVITY CENTRE OF LOWER RING
C        ARL=CROSS-SECTIONAL AREA OF LOWER RING
C        YL=RADIAL DISTANCE FROM GRAVITY CENTRE OF LOWER RING TO OUTER
C           EDGE
C        DL=DISPLACEMENT OF NA OF LOWER RING FROM GRAVITY CENTRE
C        RGL=RADIUS OF GRYATION OF LOWER RING
C        ALPHA=ONE-HALF THE ANGLE BETWEEN ARMS
C        K=1.5
C           TORRU=TORSIONAL RIGIDITY OF UPPER RING
C           BENDRU=BENDING RIGIDITY OF UPPER RING IN RING PLANE
C
C     CALCULATION OF CONSTANT TERMS
C
      SUM5=0.0
      L=0.5*(SPAN-Z(1))
      A1=0.5*(Z(4)+Z(5))
      IDL=Z(7)
      RU=0.25*(Z(1)+IDU)
      ARU=0.5*Z(2)*(Z(1)-IDU)
      IF(Z(1).LT.0.0) GO TO 28
      DU=RU-0.5*(Z(1)-IDU)/ALOG(Z(1)/IDU)
      YU=0.25*(Z(1)-IDU)
      RGU=YU/1.732
      RL=0.25*(Z(1)+IDL)
      ARL=0.5*Z(3)*(Z(1)-IDL)
      DL=RL-0.5*(Z(1)-IDL)/ALOG(Z(1)/IDL)
      YL=0.25*(Z(1)-IDL)
      RGL=YL/1.732
      ALPHA=PI/FLOAT(N)
      K=1.5
      TORRU=2.*YU*(Z(2)**3)*(1.-0.63*Z(2)/(2.*YU))*E/7.8
```

```
      BENDRU=2.*YU*(Z(2)**3)*E/12.
C
C     CALCULATE OPTIMIZATION FUNCTION
C
      RNGWTU=0.25*PI*Z(2)*(Z(1)+IDU)*(Z(1)-IDU)
      RNGWTL=0.25*PI*Z(3)*(Z(1)+IDL)*(Z(1)-IDL)
      FLNGWT=FLOAT(N)*Z(8)*L*Z(5)*(SQRT(1.+Z(9)**2)+SQRT(1.+Z(10)**2))
      WEBWT=2.*FLOAT(N)*Z(6)*(Z(4)*(L+2.*YU-Z(6))-0.5*(Z(9)+Z(10))*L**2)
      U(M)=0.283*(RNGWTU+RNGWTL+FLNGWT+WEBWT)
      P=(SL+HTHR+U(M))/FLOAT(N)
C
C     THE PHI(I) ARE THE STRESSES IN AND THE DEFLECTION OF THE STRUCTURE
C     CALCULATE DEFLECTIONS
C     CALCULATION OF RADIAL RING DEFLECTIONS
C     XXX=RADIAL DISTANCE FROM POINT OF APPLICATION OF LOAD
C        ON UPPER RING TO SUPPORT POINT (LOAD IS APPLIED TO
C        BRACKET BY BASE RING)
C
      XXX=0.5*(SPAN-IDLMIN)-2.
      DELTAU=(P*XXX/(A1+A1))*(RU/(E*ARU))*(((RU/RGU)**2)*C(5)*(1.-2.*DU/
     1RU)+C(6)-0.5*DU/(ALPHA*RU)+2.6*K*C(7))
      DELTAL=(P*XXX/(A1+A1))*(RL/(E*ARL))*(((RL/RGL)**2)*C(5)*(1.-2.*DL/
     1RL)+C(6)-0.5*DL/(ALPHA*RL)+2.6*K*C(7))
C
C     CALCULATE ARM DEFLECTIONS
C     THESE ARE NEW FORMULAE
C
      BETA1=ATAN(Z(9))
      BETA2=ATAN(Z(10))
      BETA3=0.5*(BETA1-BETA2)
      BETA4=0.5*(BETA1+BETA2)
      HO=Z(4)-(Z(9)+Z(10))*L
      HOP=HO*COS(BETA3)
      UU=Z(5)/COS(BETA4)
      P1=P*COS(BETA3)
      P2=P*SIN(BETA3)
      LL=L/COS(BETA3)
      IO=(Z(6)*(HOP+UU)+3.*(Z(8)-Z(6))*UU)*((HOP+UU)**2)/6.
      DEE=(Z(9)+Z(10))/(HOP+UU)
      EEE=Z(6)*(Z(9)+Z(10))/(Z(6)*(HOP+UU)+3.*(Z(8)-Z(6))*UU)
      IF(DEE.LT.0.0.OR.EEE.LT.0.0) GO TO 28
      RV1=RV*COS(BETA3)
      RV2=RV*SIN(BETA3)
      RH1=-RH*SIN(BETA3)
      RH2=RH*COS(BETA3)
      G=0.5*E/(1.+MU)
      DELTAC=P2*LL/(E*(2.*Z(8)*UU+Z(6)*(HOP+LL*(Z(9)+Z(10)))))
      HL=HOP+(Z(9)+Z(10))*LL
      IL=IO*(1.+EEE*LL)*(1.+DEE*LL)**2
      DELTAS=P1*LL*(0.25*HL**2+0.50*Z(8)*(HL*UU+UU**2)/Z(6))/(2.*G*IL)
```

```
      RATIO=IL/IO
      IF(RATIO.LT.1.1) GO TO 600
      GO TO 601
  600 CONTINUE
      DELTAB=P1*LL**3/(3.*E*IO)
      GO TO 602
  601 DELTAB=P1*(LL/(DEE*(DEE-EEE)*(1.+DEE*LL))+ALOG(1.+EEE*LL)/(EEE*
     1(EEE-DEE)**2)+(EEE-DEE-DEE)*ALOG(1.+DEE*LL)/(((DEE)**2)*(EEE-DEE)
     2**2))/(E*IO)
  602 CONTINUE
      DELTAV=(DELTAB+DELTAS)*COS(BETA3)+DELTAC*SIN(BETA3)
C
C     MAXIMUM DEFLECTION OF BASE RING
C
      DELTA=XXX*(DELTAU+DELTAL)/(Z(4)+0.5*(Z(2)+Z(3)))+DELTAV
C
C        BRACKET STATIC DEFLECTION
C
      STADEF=DELTA*(SL+U(M))/(SL+HTHR+U(M))
      IF(STADEF.LT.0.0) GO TO 28
      PHI(1)=DELTA
C        BRACKET VERTICAL FREQUENCY
      XNS=187.7/SQRT(STADEF)
      PHI(2)=-XNS
C
C        CRITICAL BUCKLING LOAD FOR UPPER RING
C
      ATERM=RU+YU
       IF(ATERM.LT.0.0) GO TO 28
       IF(RU.LT.0.0) GO TO 28
       PCRU=2.*ALPHA*(BENDRU*PI**2/(RU*4.*ALPHA**2)+TORRU*(SQRT(RU+YU)-
     1SQRT(RU))**2)/(RU**2)
      PCRU=PCRU/3.
      PHI(3)=P*XXX/(A1+A1)-PCRU
      PHI(4)=-Z(3) +Z(2)-1.000001
      PHI(5)=-Z(9)-Z(10)
C
C        STRESSES IN RINGS UNDER NORMAL CONDITIONS
C
      P5=P*XXX/(A1+A1)
      PHI(6)=(P5/ARU)*((RU/(DU*0.5*IDU))*(C(2)+0.25*DU/(ALPHA*RU))*(YU-
     1DU)+C(4))
      PHI(7)=(P5/ARU)*((RU/(DU*0.5*Z(1)))*(C(1)-0.25*DU/(ALPHA*RU))*(YU+
     1DU)+C(3))
      PHI(8)=(P5/ARL)*((RL/(DL*0.5*IDL))*(C(2)+0.25*DL/(ALPHA*RL))*(YL-
     1DL)+C(4))
      PHI(9)=(P5/ARL)*((RL/(DL*0.5*Z(1)))*(C(1)-0.25*DL/(ALPHA*RL))*(YL+
     1DL)+C(3))
C
C        ARM SHEAR STRESSES
```

```
C
      PHI(10)=(P1/(2.*IO))*(0.25*HOP**2+0.5*Z(8)*(HOP*UU+UU**2)/Z(6))
      PHI(11)=PHI(10)*(P1+RV1+RH1)/P1
      PHI(12)=P1*LL*(Z(9)+Z(10))*(HL+Z(8)*UU/Z(6))/(4.*IL)+P1*Z(8)*(
     1HL*UU+UU**2)*(0.25/IL)*(1.-LL*(DEE+EEE+2.*DEE*EEE*LL)/(1.+(EEE+DEE
     2)*LL+DEE*EEE*LL**2))
      PHI(13)=PHI(12)*(P1+RV1+RH1)/P1
      XLIM1=0.40*SY
      XLIM2=(64.E+06)*(2.*Z(6)/HL)**2
      IF(XLIM2.LT.XLIM1) XLIM1=XLIM2
      PHI(14)=PHI(11)-XLIM1
      IF(PHI(13).GT.PHI(14)) PHI(14)=PHI(13)-XLIM1
C
C     ARM BENDING STRESSES
C
      PHI(15)=0.0
      PHI(16)=0.0
      PHI(17)=0.0
      XDIV=LL/10.
      XX=-XDIV
      DO 25 JJK=1,11
      XX=XX+XDIV
      SIG1=P1*XX*0.5*(HOP+(Z(9)+Z(10))*XX+2.*UU)/(IO*(1.+EEE*XX)*(1.+DEE
     1*XX)**2)
      SIG2=0.5*P2/(Z(8)*UU+Z(6)*(HOP+(Z(9)+Z(10))*XX))
      SIG3=(SIG1+SIG2)/COS(BETA4)
      SIG4=SIG1*(P1+RV1+RH1)/P1
      SIG5=SIG2*(P2+RV2+RH2)/P2
      SIG6=(SIG4+SIG5)/COS(BETA4)
      SIG7=(SIG1-SIG2)/COS(BETA4)
      IF(SIG3.GT.PHI(15)) PHI(15)=SIG3
      IF(SIG6.GT.PHI(16)) PHI(16)=SIG6
      IF(SIG7.GT.PHI(17)) PHI(17)=SIG7
   25 CONTINUE
      TERM10=0.61*SY
      TERM11=(12.E+06)*Z(8)*Z(5)/(LL*(HL+UU+UU))
      IF(TERM11.LT.TERM10) TERM10=TERM11
      TERM12=6.3*E*(Z(5)/Z(8))**2
      IF(TERM12.LT.TERM10) TERM10=TERM12
      PHI(18)=PHI(16)    -TERM10
C
C     PROFILE LIMITS
C
      HWEB=Z(4)-(Z(9)+Z(10))*L
      HO=HWEB+Z(5)+Z(5)
      SLOPE=(HRMAX-HOMAX)/(0.5*(SPAN-ODMAX))
      HBAR=HOMAX+SLOPE*L
      HEIGHT=HO-Z(5)+Z(9)*L+Z(2)
      PHI(19)=HO
      PHI(20)=HEIGHT
```

```
      PHI(21)=-HEIGHT
      PHI(22)=HEIGHT-HBAR
C
      DO 27 J4=1,10
      PHI(J4+22)=-Z(J4)
      PHI(J4+32)=Z(J4)
   27 CONTINUE
      GO TO 29
   28 CONTINUE
      SUM5=1.
   29 CONTINUE
      RETURN
      END
```

```
$IBFTC SIZE
      SUBROUTINE SIZE(RANGE,Z,DX)
      DIMENSION RANGE(15,2),Z(15),DX(15)
      DO 1 J=1,10
      IF(DX(J).EQ.0.0) GO TO 1
      KK=INT((RANGE(J,2)-RANGE(J,1))/DX(J))
      KK=KK+1
      DIV=DX(J)/2.
      XX=RANGE(J,2)-DIV
      DO 2 I=1,KK
      IF(Z(J).GT.XX) GO TO 3
      XX=XX-DX(J)
      GO TO 2
    3 CONTINUE
      Z(J)=XX+DIV
      GO TO 1
    2 CONTINUE
    1 CONTINUE
      RETURN
      END
```

G.2 RESULTS

```
                        CØNSTANT PARAMETERS

NUMBER ØF ARMS.............................          4
PØISSØN'S RATIØ............................          0.300
NØRMAL FACTØR ØF SAFETY....................          3.000
EMERGENCY FACTØR ØF SAFETY.................          1.500
INTERNAL DIAMETER ØF UPPER RING............         77.000IN.
DISTANCE FRØM LINE ØF ACTIØN ØF FSC TØ
     PLANE ØF SUPPØRTS.....................         58.250IN.
DIAMETER ØVER SUPPØRT PØINTS...............        270.000IN.
TURBINE ØVERSPEED..........................        160.000RPM
PLATE YIELD STRENGTH.......................      35000.000PSI
HYDRAULIC THRUST...........................     305600.000LB.
MAXIMUM STATIC LØAD........................     420400.000LB.
SHØRT CIRCUIT FØRCE........................     371500.000LB.
MØDULUS ØF ELASTICITY......................   30000000.000PSI

              RANGES FØR VARIABLES


         97.00000  .GE.  Z(  1)  .LE. 216.00000
          2.00000  .GE.  Z(  2)  .LE.   6.00000
          2.00000  .GE.  Z(  3)  .LE.   6.00000
         20.00000  .GE.  Z(  4)  .LE.  80.00000
          1.00000  .GE.  Z(  5)  .LE.   4.00000
          1.00000  .GE.  Z(  6)  .LE.   4.00000
         54.00000  .GE.  Z(  7)  .LE.  77.00000
         15.00000  .GE.  Z(  8)  .LE.  35.00000
          0.00000  .GE.  Z(  9)  .LE.   1.00000
          0.00000  .GE.  Z( 10)  .LE.   0.00000
                        BRACKET PRØFILE LIMITS


MAXIMUM HEIGHT ØF ARM AT SUPPØRT...........         40.000IN.
MAXIMUM ELEVATIØN ØF UPPER RING............         47.750IN.
MINIMUM ELEVATIØN ØF UPPER RING............         47.750IN.
MAXIMUM ØUTSIDE DIAMETER ØF RINGS..........        216.000IN.
MINIMUM ØUTSIDE DIAMETER ØF RINGS..........         97.000IN.
MAXIMUM INSIDE DIAMETER ØF LØWER RING......         77.000IN.
MINIMUM INSIDE DIAMETER ØF LØWER RING......         54.000IN.
MAXIMUM SLØPE ØF LØWER FLANGE..............          0.000
MINIMUM SLØPE ØF LØWER FLANGE..............          0.000
              UNKNØWN PARAMETER ESTIMATES

ØUTSIDE DIAMETER ØF RINGS..................        127.000IN.
UPPER RING THICKNESS.......................          3.250IN.
LØWER RING THICKNESS.......................          2.250IN.
DISTANCE BETWEEN RINGS.....................         43.375IN.
BEAM FLANGE THICKNESS......................          1.125IN.
BEAM WEB THICKNESS.........................          1.125IN.
INTERNAL DIAMETER ØF LØWER RING............         68.000IN.
WIDTH ØF BEAM FLANGE.......................         26.500IN.
SLØPE ØF UPPER FLANGE ØF BEAM..............          0.240
SLØPE ØF LØWER FLANGE ØF BEAM..............          0.000

                        CALCULATED TERMS
```

```
INITIAL WEIGHT.............................       26990.482LB.
MAXIMUM VERTICAL REACTIØN DUE TØ SCF....          80147.097LB.
MAXIMUM HØRIZØNTAL REACTIØN DUE TØ SCF..         371500.000LB.
INITIAL NØRMAL VERTICAL REACTIØN........         188247.619LB.

                    LIMITS

MAXIMUM ALLØWABLE STRUCTURE DEFLECTIØN..              0.100IN.
BRACKET CRITICAL FREQUENCY LIMIT........            216.000CPM
MAXIMUM NØRMAL TENSILE STRESS...........          11666.667PSI
MAXIMUM NØRMAL SHEAR STRESS.............           5833.333PSI
MAXIMUM EMERGENCY TENSILE STRESS........          23333.333PSI
MAXIMUM EMERGENCY SHEAR STRESS..........          11666.667PSI

MAXIMUM STRESS IN CØMPRESSIØN FLANGE ØF BEAM
        (LATERAL BUCKLING LIMIT)=0.61*SY ØR 12,000,000 PSI
        *(WID*TF)/(2.*L*CØ), WHICHEVER IS LESS
        (CSA S16-1961 CLAUSE 12.4.1)

MAXIMUM WEB SHEAR IN BEAM=0.40*SY ØR 64'000'000 PSI*(2.*TW/H)**2,
        WHICHEVER IS LESS (CSA S16-1961 CLAUSE 12.5)

MAXIMUM STRESS IN CØMPRESSIØN FLANGE ØF ARM TØ LIMIT LØCAL
        BUCKLING=KC*E(TF/WID)**2, WHERE KC=6.3

            STEP LENGTHS FØR VARIABLES

                 DX(  1)=  1.000000
                 DX(  2)=  0.125000
                 DX(  3)=  0.125000
                 DX(  4)=  0.250000
                 DX(  5)=  0.062500
                 DX(  6)=  0.062500
                 DX(  7)=  1.000000
                 DX(  8)=  0.250000
                 DX(  9)=  0.010000
                 DX( 10)=  0.010000

                    ØPTIMIZATIØN

NNN=   1          U(11)=  0.273184E 05LB.

NNN=   2          U(22)=  0.272520E 05LB.

NNN=   3          U(22)=  0.273580E 05LB.

NNN=   4          U(11)=  0.272112E 05LB.

NNN=   5          U(22)=  0.269593E 05LB.

NNN=   6          U(22)=  0.266674E 05LB.
```

```
NNN=   7          U(22)=  0.267441E 05LB.

NNN=   8          U(11)=  0.266674E 05LB.

       0PTIMIZATI0N IN SIMPLEX STAGE

       NCALL=     1

       SIMPLEX S0LUTI0N UNSUCCESSFUL
                             U(31)=  0.286629E 05LB.

       LIMIT  1 EXCEEDED
       LIMIT 21 EXCEEDED
       LIMIT 27 EXCEEDED
       LIMIT 28 EXCEEDED

       ACTUAL VALUE 0F U IS   0.260876E 05 LB.

NNN=   9          U(45)=  0.262467E 05LB.

       NCALL=     2

       SIMPLEX S0LUTI0N UNSUCCESSFUL
                             U(31)=  0.270852E 05LB.

       LIMIT  1 EXCEEDED
       LIMIT 21 EXCEEDED
       LIMIT 27 EXCEEDED
       LIMIT 28 EXCEEDED

       ACTUAL VALUE 0F U IS   0.258352E 05 LB.

NNN=  10          U(45)=  0.259996E 05LB.

       NCALL=     3

       SIMPLEX S0LUTI0N UNSUCCESSFUL
                             U(31)=  0.266691E 05LB.

       LIMIT  1 EXCEEDED
       LIMIT 21 EXCEEDED
       LIMIT 27 EXCEEDED
       LIMIT 28 EXCEEDED

       ACTUAL VALUE 0F U IS   0.255905E 05 LB.

NNN=  11          U(45)=  0.257553E 05LB.

       NCALL=     4

       SIMPLEX S0LUTI0N UNSUCCESSFUL
                             U(31)=  0.263420E 05LB.

       LIMIT  1 EXCEEDED
       LIMIT 21 EXCEEDED
       LIMIT 27 EXCEEDED
       LIMIT 28 EXCEEDED
```

```
        ACTUAL VALUE ØF U IS   0.253631E 05 LB.
NNN=  12      U(45)=  0.255283E 05LB.
        NCALL=    5
        SIMPLEX SØLUTIØN UNSUCCESSFUL
                       U(31)=  0.260006E 05LB.
        LIMIT  1 EXCEEDED
        LIMIT 21 EXCEEDED
        LIMIT 27 EXCEEDED
        LIMIT 28 EXCEEDED
        ACTUAL VALUE ØF U IS   0.252312E 05 LB.
NNN=  13      U(45)=  0.253984E 05LB.
        NCALL=    6
        SIMPLEX SØLUTIØN UNSUCCESSFUL
                       U(31)=  0.198635E 10LB.
        LIMIT  1 EXCEEDED
        LIMIT  3 EXCEEDED
        LIMIT 21 EXCEEDED
        LIMIT 27 EXCEEDED
        LIMIT 28 EXCEEDED
        ACTUAL VALUE ØF U IS   0.251588E 05 LB.
NNN=  14      U(45)=  0.253274E 05LB.
        NCALL=    7
SIMPLEX ØPTIMUM.....  0.253022E 05 LB.
PATTERN MØVE  1 UNSUCCESSFUL      U=  0.159712E 12 LB.
        STEP SIZE REDUCED
        NCALL=    8
        SIMPLEX SØLUTIØN UNSUCCESSFUL
                       U(31)=  0.100180E 07LB.
        LIMIT  1 EXCEEDED
        LIMIT  3 EXCEEDED
        LIMIT 21 EXCEEDED
        LIMIT 25 EXCEEDED
        LIMIT 27 EXCEEDED
        LIMIT 28 EXCEEDED
        LIMIT 29 EXCEEDED
        ACTUAL VALUE ØF U IS   0.251483E 05 LB.
NNN=  15      U(45)=  0.252389E 05LB.
```

```
          NCALL=    9

   SIMPLEX ØPTIMUM.....  0.252160E 05 LB.

   PATTERN MØVE  1 UNSUCCESSFUL         U=  0.817278E 11 LB.

          STEP SIZE REDUCED

          NCALL=   10

          SIMPLEX SØLUTIØN UNSUCCESSFUL
                           U(31)=  0.191217E 10LB.

          LIMIT  1 EXCEEDED
          LIMIT  3 EXCEEDED
          LIMIT 21 EXCEEDED
          LIMIT 25 EXCEEDED
          LIMIT 27 EXCEEDED
          LIMIT 28 EXCEEDED

          ACTUAL VALUE ØF U IS   0.251538E 05 LB.

          STEP SIZE REDUCED

                    ØPTIMUM SØLUTIØN

   ØUTSIDE DIAMETER ØF RINGS................        132.510IN.
   UPPER RING THICKNESS.....................          3.000IN.
   LØWER RING THICKNESS.....................          2.000IN.
   DISTANCE BETWEEN RINGS...................         43.750IN.
   BEAM FLANGE THICKNESS....................          1.000IN.
   BEAM WEB THICKNESS.......................          1.000IN.
   INTERNAL DIAMETER ØF LØWER RING..........         54.000IN.
   WIDTH ØF BEAM FLANGE.....................         16.642IN.
   SLØPE ØF UPPER FLANGE ØF BEAM............          0.224
   SLØPE ØF LØWER FLANGE ØF BEAM............         -0.000

   MINIMUM WEIGHT...........................       25216.748LB.

                    ØPTIMUM SØLUTIØN

   ØUTSIDE DIAMETER ØF RINGS................        133.000IN.
   UPPER RING THICKNESS.....................          3.000IN.
   LØWER RING THICKNESS.....................          2.000IN.
   DISTANCE BETWEEN RINGS...................         43.750IN.
   BEAM FLANGE THICKNESS....................          1.000IN.
   BEAM WEB THICKNESS.......................          1.000IN.
   INTERNAL DIAMETER ØF LØWER RING..........         55.000IN.
   WIDTH ØF BEAM FLANGE.....................         16.500IN.
   SLØPE ØF UPPER FLANGE ØF BEAM............          0.220
   SLØPE ØF LØWER FLANGE ØF BEAM............         -0.000

   MINIMUM WEIGHT...........................       25240.505LB.

                    FINAL CALCULATIØNS

   PHI(  1)=              0.100     .LE.          0.100
   PHI(  2)=           -771.410     .LE.       -216.000
```

```
PHI(  3)=         -8151.805      .LE.              0.000
PHI(  4)=            -0.000      .LE.              0.000
PHI(  5)=            -0.220      .LE.              0.000
PHI(  6)=          9409.434      .LE.          11666.667
PHI(  7)=          9134.244      .LE.          11666.667
PHI(  8)=          9175.165      .LE.          11666.667
PHI(  9)=          6583.150      .LE.          11666.667
PHI( 10)=          3776.616      .LE.           5833.333
PHI( 11)=          4576.239      .LE.          11666.667
PHI( 12)=          1964.813      .LE.           5833.333
PHI( 13)=          2380.822      .LE.          11666.667
PHI( 14)=        -11619.178      .LE.              0.000
PHI( 15)=          9885.275      .LE.          11666.667
PHI( 16)=         15096.765      .LE.          23333.333
PHI( 17)=          9546.538      .LE.          11666.667
PHI( 18)=         -6253.234      .LE.              0.000
PHI( 19)=            30.680      .LE.             40.000
PHI( 20)=            47.750      .LE.             47.750
PHI( 21)=           -47.750      .LE.            -47.750
PHI( 22)=           -11.912      .LE.              0.000
PHI( 23)=          -133.000      .LE.            -97.000
PHI( 24)=            -3.000      .LE.             -2.000
PHI( 25)=            -2.000      .LE.             -2.000
PHI( 26)=           -43.750      .LE.            -20.000
PHI( 27)=            -1.000      .LE.             -1.000
PHI( 28)=            -1.000      .LE.             -1.000
PHI( 29)=           -55.000      .LE.            -54.000
PHI( 30)=           -16.500      .LE.            -15.000
PHI( 31)=            -0.220      .LE.             -0.000
PHI( 32)=             0.000      .LE.             -0.000
PHI( 33)=           133.000      .LE.            216.000
PHI( 34)=             3.000      .LE.              6.000
PHI( 35)=             2.000      .LE.              6.000
PHI( 36)=            43.750      .LE.             80.000
PHI( 37)=             1.000      .LE.              4.000
PHI( 38)=             1.000      .LE.              4.000
PHI( 39)=            55.000      .LE.             77.000
PHI( 40)=            16.500      .LE.             35.000
PHI( 41)=             0.220      .LE.              1.000
PHI( 42)=            -0.000      .LE.              0.000

$CARD READ

      D L SAXTØN
```

APPENDIX H

EXPERIMENTAL TEST RESULTS
AND THEORETICAL COMPARISONS

```
                                         TEST NUMBER  1


                                       RING STRESSES (PSI)
       LØAD             GAGE 1                GAGE 2                GAGE 3                GAGE 4
       (LB)        EXP.    THEØR.      EXP.    THEØR.      EXP.    THEØR.      EXP.    THEØR.
         0.          0.        0.        0.       -0.        0.        0.        0.       -0.
      1050.        420.      227.     -540.     -285.      570.      508.     -570.     -405.
      1980.        690.      427.     -540.     -538.     1200.      958.    -1080.     -764.
      3000.        840.      647.     -630.     -815.     1590.     1451.    -1620.    -1157.
      4010.       1020.      865.     -840.    -1090.     2160.     1940.    -2100.    -1547.
      5020.       1140.     1083.     -900.    -1364.     2610.     2428.    -2520.    -1936.
      5980.       1230.     1290.     -990.    -1625.     3150.     2893.    -3000.    -2306.
      7000.       1380.     1511.    -1140.    -1903.     3450.     3386.    -3600.    -2700.
      8020.       1500.     1731.    -1110.    -2180.     3960.     3879.    -4050.    -3093.
      9020.       1560.     1947.    -1830.    -2452.     4500.     4363.    -4530.    -3479.
     10050.       1800.     2169.    -1920.    -2732.     5010.     4861.    -5100.    -3876.
     11070.       1920.     2389.    -2040.    -3009.     5580.     5355.    -5640.    -4270.
     12000.       1980.     2590.    -2100.    -3262.     6000.     5804.    -5880.    -4628.
SLØPES (PSI/KIP)

  LØAD CYCLE       196.      216.     -143.     -272.      519.      484.     -499.     -386.
LAST 5 PØINTS      138.      216.     -117.     -272.      491.      484.     -473.     -386.
ØN LØAD CYCLE
```

```
                                   TEST NUMBER  1


                                 ARM STRESSES (PSI)
        LOAD          GAGE 5                 GAGE 6                 GAGE 7

        (LB)      EXP.      THEOR.       EXP.      THEOR.       EXP.      THEOR.

          0.        0.         0.          0.         0.          0.         -0.
       1050.      540.       728.        360.       408.      -1140.       -788.
       1980.     1200.      1373.        780.       769.      -1260.      -1486.
       3000.     1500.      2081.       1020.      1166.      -2220.      -2251.
       4010.     2160.      2781.       1470.      1558.      -2580.      -3009.
       5020.     2760.      3482.       1800.      1951.      -2940.      -3767.
       5980.     3150.      4148.       2220.      2324.      -3600.      -4487.
       7000.     3570.      4855.       2400.      2720.      -4380.      -5252.
       8020.     4170.      5563.       2850.      3117.      -4620.      -6017.
       9020.     4740.      6256.       3120.      3505.      -5220.      -6768.
      10050.     5160.      6971.       3460.      3905.      -6000.      -7541.
      11070.     5820.      7678.       3870.      4302.      -6480.      -8306.
      12000.     6210.      8323.       4140.      4663.      -6960.      -9004.
   SLOPES (PSI/KIP)

     LOAD CYCLE   532.       694.        366.       389.       -564.       -750.
   LAST 5 POINTS  515.       694.        365.       389.       -539.       -750.
   ON LOAD CYCLE
```

```
                                   TEST NUMBER  1


                                 ARM STRESSES (PSI)
       LØAD             GAGE 8                  GAGE 9                 GAGE 10

       (LB)         EXP.      THEØR.        EXP.      THEØR.       EXP.      THEØR.

         0.           0.        -0.           0.        -0.          0.        -0.
      1050.        -870.      -448.        -600.      -448.      -1440.      -756.
      1980.       -1110.      -844.       -1170.      -844.      -2460.     -1425.
      3000.       -1740.     -1280.       -1650.     -1280.      -3120.     -2159.
      4010.       -2190.     -1710.       -2250.     -1710.      -3930.     -2886.
      5020.       -2700.     -2141.       -2700.     -2141.      -4590.     -3612.
      5980.       -3120.     -2550.       -3300.     -2550.      -5340.     -4303.
      7000.       -3660.     -2986.       -3750.     -2986.      -6000.     -5037.
      8020.       -4050.     -3421.       -4350.     -3421.      -6750.     -5771.
      9020.       -4500.     -3847.       -4830.     -3847.      -7440.     -6491.
     10050.       -5100.     -4286.       -5370.     -4286.      -8010.     -7232.
     11070.       -5520.     -4721.       -5880.     -4721.      -8760.     -7966.
     12000.       -5940.     -5118.       -6300.     -5118.      -9270.     -8635.
SLØPES (PSI/KIP)

   LØAD CYCLE      -506.      -427.        -544.      -427.       -852.      -720.
LAST 5 PØINTS      -497.      -427.        -530.      -427.       -721.      -720.
ØN LØAD CYCLE
```

```
                                   TEST NUMBER  1


                              DEFLECTIØNS (INCHES/10000.)
       LØAD            TØTAL                  ARM 1                 ARM 2

       (LB)        EXP.     THEØR.        EXP.     THEØR.       EXP.     THEØR.

         0.         0.0       0.0         ---        0.0         0.0       0.0
      1050.        39.0       4.8         ---        3.3        22.0       3.3
      1980.        55.0       9.1         0.0        6.2        28.5       6.2
      3000.        65.0      13.8         2.5        9.4        32.0       9.4
      4010.        79.0      18.4         6.0       12.6        35.0      12.6
      5020.        88.0      23.0        10.0       15.8        38.5      15.8
      5980.         ---      27.4         ---       18.8         ---      18.8
      7000.       106.5      32.1        17.0       22.0        44.0      22.0
      8020.       116.0      36.8        21.5       25.2        47.0      25.2
      9020.       124.0      41.4        24.0       28.3        50.5      28.3
     10050.       130.0      46.1        29.0       31.6        53.5      31.6
     11070.       138.0      50.8        33.5       34.8        57.0      34.8
     12000.       144.5      55.0        37.5       37.7        60.0      37.7

SLØPES (TENTHS/KIP)

    LØAD CYCLE      8.5       4.6         3.3        3.1         3.3       3.1
  LAST 5 PØINTS     2.6       4.6         3.3        3.1         3.3       3.1
  ØN LØAD CYCLE
```

```
                                 TEST NUMBER  2


                               RING STRESSES (PSI)
     LØAD            GAGE 1                GAGE 2                GAGE 3                GAGE 4

     (LB)       EXP.      THEØR.      EXP.      THEØR.      EXP.      THEØR.      EXP.      THEØR.

       0.         0.         0.         0.        -0.         0.         0.         0.        -0.
    1050.       390.       227.      -390.      -285.       570.       508.      -510.      -405.
    1980.       510.       427.      -180.      -538.       990.       958.     -1080.      -764.
    3000.       720.       647.      -270.      -815.      1620.      1451.     -1590.     -1157.
    4010.       780.       865.      -480.     -1090.      2010.      1940.     -2100.     -1547.
    5020.       960.      1083.      -630.     -1364.      2580.      2428.     -2520.     -1936.
    5980.      1050.      1290.      -420.     -1625.      2850.      2893.     -3120.     -2306.
    7010.      1140.      1513.      -600.     -1905.      3600.      3391.     -3540.     -2704.
    8020.      1230.      1731.      -570.     -2180.      3900.      3879.     -4080.     -3093.
    9020.      1470.      1947.      -570.     -2452.      4440.      4363.     -4440.     -3479.
   10020.      1380.      2162.      -630.     -2723.      4800.      4847.     -4950.     -3865.
   11000.      1530.      2374.      -810.     -2990.      5430.      5321.     -5370.     -4243.
   12000.      1620.      2590.      -600.     -3262.      5820.      5804.     -5910.     -4628.
SLØPES (PSI/KIP)

  LØAD CYCLE    164.       216.       -74.      -272.       487.       484.      -516.      -386.
LAST 5 PØINTS   132.       216.       -85.      -272.       468.       484.      -500.      -386.
ØN LØAD CYCLE
```

```
                                   TEST NUMBER  2


                                  ARM STRESSES (PSI)
      LØAD           GAGE 5                 GAGE 6                 GAGE 7

      (LB)       EXP.      THEØR.       EXP.      THEØR.       EXP.      THEØR.

        0.         0.         0.         0.         0.         0.         -0.
     1050.       840.       728.       420.       408.     -1170.       -788.
     1980.      1080.      1373.       600.       769.     -1830.      -1486.
     3000.      1680.      2081.      1230.      1166.     -2130.      -2251.
     4010.      2160.      2781.      1380.      1558.     -2790.      -3009.
     5020.      2760.      3482.      1860.      1951.     -3240.      -3767.
     5980.      3150.      4148.      2040.      2324.     -4110.      -4487.
     7010.      3810.      4862.      2610.      2724.     -4440.      -5260.
     8020.      4110.      5563.      2700.      3117.     -4920.      -6017.
     9020.      4770.      6256.      3270.      3505.     -5430.      -6768.
    10020.      5190.      6950.      3390.      3894.     -5940.      -7518.
    11000.      5640.      7630.      3780.      4275.     -6180.      -8253.
    12000.      6180.      8323.      4020.      4663.     -6990.      -9004.
 SLØPES (PSI/KIP)

   LØAD CYCLE    515.       694.       351.       389.      -624.       -750.
 LAST 5 PØINTS   521.       694.       351.       389.      -565.       -750.
 ØN LØAD CYCLE
```

```
                              TEST NUMBER  2


                            ARM STRESSES (PSI)
     LØAD            GAGE 8              GAGE 9               GAGE 10

     (LB)        EXP.     THEØR.      EXP.     THEØR.      EXP.     THEØR.

       0.          0.        -0.        0.        -0.        0.        -0.
    1050.       -870.      -448.     -660.      -448.    -1200.      -756.
    1980.      -1350.      -844.    -1080.      -844.    -2130.     -1425.
    3000.      -1770.     -1280.    -1650.     -1280.    -2790.     -2159.
    4010.      -2640.     -1710.    -2130.     -1710.    -3540.     -2886.
    5020.      -2760.     -2141.    -2730.     -2141.    -4440.     -3612.
    5980.      -3240.     -2550.    -3150.     -2550.    -4920.     -4303.
    7010.      -3780.     -2990.    -3840.     -2990.    -5850.     -5044.
    8020.      -4200.     -3421.    -4170.     -3421.    -6360.     -5771.
    9020.      -4560.     -3847.    -4770.     -3847.    -7050.     -6491.
   10020.      -5100.     -4274.    -5100.     -4274.    -7650.     -7210.
   11000.      -5400.     -4692.    -5610.     -4692.    -8190.     -7916.
   12000.      -6060.     -5118.    -6150.     -5118.    -8910.     -8635.

 SLØPES (PSI/KIP)

   LØAD CYCLE   -530.      -427.     -525.      -427.     -812.      -720.
 LAST 5 PØINTS  -476.      -427.     -521.      -427.     -722.      -720.
 ØN LØAD CYCLE
```

```
                              TEST NUMBER  2

                          DEFLECTIØNS (INCHES/10000.)
       LØAD            TØTAL                  ARM 1                  ARM 2
       (LB)       EXP.      THEØR.       EXP.      THEØR.       EXP.      THEØR.

         0.        0.0        0.0         0.0        0.0         0.0        0.0
      1050.       31.5        4.8        -1.2        3.3        17.5        3.3
      1980.       41.2        9.1        -1.2        6.2        24.7        6.2
      3000.       56.5       13.8         1.0        9.4        28.3        9.4
      4010.       66.0       18.4         4.8       12.6        31.8       12.6
      5020.       74.6       23.0         8.0       15.8        35.3       15.8
      5980.       83.0       27.4        11.6       18.8        37.4       18.8
      7010.       95.5       32.1        15.8       22.0        41.3       22.0
      8020.       99.5       36.8        18.5       25.2        43.3       25.2
      9020.      108.0       41.4        21.8       28.3        45.8       28.3
     10020.      116.4       46.0        25.3       31.5        48.8       31.5
     11000.      124.2       50.4        28.5       34.5        51.3       34.5
     12000.      130.6       55.0        32.8       37.7        55.3       37.7
SLØPES (TENTHS/KIP)

    LØAD CYCLE    12.9        4.6         2.1        3.1         5.6        3.1
  LAST 5 PØINTS   10.2        4.6         3.3        3.1         3.2        3.1
  ØN LØAD CYCLE
```

```
                              TEST NUMBER  3

                 SHIMS UNDER SUPPØRT BLØCKS ØF ARMS 2 AND 4
                              STRESSES (PSI)
     LØAD              GAGE 1                  GAGE 2                GAGE 10
     (LB)          EXP.       THEØR.       EXP.       THEØR.      EXP.       THEØR.

       0.            0.         -0.          0.          0.         0.         -0.
     495.         -870.       -616.        810.        774.      -600.       -712.
     995.        -1350.      -1238.       1650.       1555.     -1470.      -1432.
    1500.        -2070.      -1866.       2190.       2344.     -2520.      -2158.
    2000.        -2640.      -2488.       2790.       3126.     -3270.      -2878.
    2505.        -3300.      -3116.       3360.       3915.     -4080.      -3605.
    3015.        -3930.      -3751.       3990.       4712.     -4950.      -4339.
    3505.        -4500.      -4360.       4500.       5478.     -5700.      -5044.

    2990.        -3900.      -3720.       4050.       4673.     -5010.      -4303.
    2500.        -3360.      -3110.       3600.       3907.     -4290.      -3597.
    1995.        -2760.      -2482.       2880.       3118.     -3570.      -2871.
    1495.        -2070.      -1860.       2520.       2337.     -2640.      -2151.
    1000.        -1620.      -1244.       1800.       1563.     -1800.      -1439.
     490.         -990.       -610.        870.        766.      -900.       -705.
      90.         -210.       -112.        -60.        141.      -150.       -130.
 SLØPES (PSI/KIP)
    LØAD CYCLE   -1262.      -1244.       1260.       1563.     -1666.      -1439.

   UNLØAD CYCLE  -1234.      -1244.       1371.       1563.     -1685.      -1439.

   LAST 5 PØINTS -1224.      -1244.       1158.       1563.     -1600.      -1439.
   ØN LØAD CYCLE
```

TEST NUMBER 4

SHIMS UNDER SUPPØRT BLØCKS ØF ARMS 2 AND 4

STRESSES (PSI)

LØAD	GAGE 1		GAGE 2		GAGE 10	
(LB)	EXP.	THEØR.	EXP.	THEØR.	EXP.	THEØR.
0.	0.	-0.	0.	0.	0.	-0.
495.	-870.	-616.	780.	774.	-900.	-712.
1005.	-1410.	-1250.	1440.	1571.	-1680.	-1446.
1500.	-2040.	-1866.	2010.	2344.	-2580.	-2158.
2000.	-2670.	-2488.	2580.	3126.	-3300.	-2878.
2500.	-3300.	-3110.	3210.	3907.	-4080.	-3597.
2995.	-3840.	-3726.	3840.	4681.	-4860.	-4310.
3505.	-4440.	-4360.	4440.	5478.	-5730.	-5044.
2985.	-3750.	-3713.	4080.	4666.	-4950.	-4295.
2495.	-3240.	-3104.	3660.	3900.	-4260.	-3590.
2000.	-2760.	-2488.	3180.	3126.	-3540.	-2878.
1500.	-1920.	-1866.	2520.	2344.	-2730.	-2158.
1010.	-1500.	-1256.	1830.	1579.	-1920.	-1453.
485.	-930.	-603.	930.	758.	-870.	-698.
5.	-90.	-6.	90.	8.	0.	-7.
SLØPES (PSI/KIP)						
LØAD CYCLE	-1243.	-1244.	1244.	1563.	-1614.	-1439.
UNLØAD CYCLE	-1208.	-1244.	1347.	1563.	-1667.	-1439.
LAST 5 PØINTS ØN LØAD CYCLE	-1193.	-1244.	1223.	1563.	-1571.	-1439.

```
                              TEST NUMBER  5

                            RING STRESSES (PSI)
     LØAD           GAGE 1              GAGE 2              GAGE 3              GAGE 4

     (LB)        EXP.     THEØR.     EXP.     THEØR.     EXP.     THEØR.     EXP.     THEØR.

       0.          0.         0.        0.       -0.        0.         0.        0.       -0.
     990.        360.       214.     -390.     -269.      510.       479.     -690.     -382.
    1980.        720.       427.     -330.     -538.     1050.       958.    -1170.     -764.
    2990.        660.       645.     -390.     -813.     1470.      1446.    -1710.    -1153.
    4020.        900.       868.     -420.    -1093.     2100.      1944.    -2190.    -1551.
    5050.        990.      1090.     -570.    -1373.     2490.      2443.    -2760.    -1948.
    5990.       1080.      1293.     -570.    -1628.     2970.      2897.    -3180.    -2310.
    7000.       1200.      1511.     -750.    -1903.     3420.      3386.    -3660.    -2700.
    8020.       1290.      1731.     -720.    -2180.     3930.      3879.    -4140.    -3093.
    9020.       1410.      1947.     -930.    -2452.     4350.      4363.    -4680.    -3479.
   10020.       1530.      2162.     -960.    -2723.     4920.      4847.    -5100.    -3865.
   11120.       1620.      2400.    -1020.    -3022.     5400.      5379.    -5580.    -4289.
   11980.       1800.      2585.     -990.    -3256.     5850.      5795.    -6000.    -4621.

   11000.       1680.      2374.    -1050.    -2990.     5520.      5321.    -5550.    -4243.
    9980.       1530.      2154.     -990.    -2713.     5220.      4827.    -5010.    -3849.
    9000.       1350.      1942.     -930.    -2446.     4980.      4353.    -4560.    -3471.
    8000.       1260.      1726.     -900.    -2174.     4470.      3870.    -4140.    -3086.
    6960.       1110.      1502.     -870.    -1892.     4050.      3367.    -3660.    -2684.
    6000.       1080.      1295.     -690.    -1631.     3570.      2902.    -3180.    -2314.
    5000.        930.      1079.     -570.    -1359.     3000.      2418.    -2730.    -1928.
    4000.        870.       863.     -510.    -1087.     2430.      1935.    -2160.    -1543.
    3000.        660.       647.     -510.     -815.     1770.      1451.    -1710.    -1157.
    2000.        600.       432.     -420.     -544.     1170.       967.    -1170.     -771.
    1010.        450.       218.     -510.     -275.      600.       489.     -750.     -390.
       0.        120.         0.      -90.       -0.      -90.         0.      -90.       -0.
SLØPES (PSI/KIP)

  LØAD CYCLE     129.       216.      -77.     -272.      483.       484.     -492.     -386.
 UNLØAD CYCLE    126.       216.      -76.     -272.      521.       484.     -487.     -386.
LAST 5 PØINTS    122.       216.      -63.     -272.      488.       484.     -461.     -386.
ØN LØAD CYCLE
```

```
                             TEST NUMBER  5

                           ARM STRESSES (PSI)

    LØAD         GAGE 5               GAGE 6               GAGE 7

    (LB)      EXP.     THEØR.      EXP.     THEØR.      EXP.     THEØR.

       0.        0.        0.        0.        0.        0.       -0.
     990.      630.      687.      300.      385.    -1170.     -743.
    1980.     1170.     1373.      630.      769.    -1560.    -1486.
    2990.     1590.     2074.      960.     1162.    -2280.    -2243.
    4020.     2220.     2788.     1470.     1562.    -2880.    -3016.
    5050.     2730.     3503.     1710.     1962.    -3420.    -3789.
    5990.     3270.     4155.     2130.     2328.    -3840.    -4494.
    7000.     3630.     4855.     2430.     2720.    -4380.    -5252.
    8020.     4230.     5563.     2790.     3117.    -4920.    -6017.
    9020.     4710.     6256.     3120.     3505.    -5370.    -6768.
   10020.     5280.     6950.     3510.     3894.    -5910.    -7518.
   11120.     5760.     7713.     3810.     4321.    -6600.    -8343.
   11980.     6300.     8309.     4080.     4655.    -7080.    -8989.

   11000.     5970.     7630.     4080.     4275.    -6570.    -8253.
    9980.     5760.     6922.     4080.     3878.    -6030.    -7488.
    9000.     5400.     6242.     4020.     3497.    -5580.    -6753.
    8000.     4920.     5549.     3930.     3109.    -5100.    -6002.
    6960.     4410.     4827.     3510.     2705.    -4590.    -5222.
    6000.     3870.     4162.     3090.     2332.    -3900.    -4502.
    5000.     3150.     3468.     2490.     1943.    -3480.    -3751.
    4000.     2520.     2774.     1950.     1554.    -2910.    -3001.
    3000.     1800.     2081.     1320.     1166.    -2400.    -2251.
    2000.     1320.     1387.      810.      777.    -1860.    -1501.
    1010.      840.      701.      660.      392.    -1140.     -758.
       0.      -90.        0.      -90.        0.     -300.       -0.

SLØPES (PSI/KIP)

  LØAD CYCLE   515.      694.      347.      389.     -555.     -750.
 UNLØAD CYCLE  565.      694.      411.      389.     -553.     -750.
LAST 5 PØINTS  517.      694.      326.      389.     -554.     -750.
ØN LØAD CYCLE
```

```
                              TEST NUMBER  5


                           ARM STRESSES (PSI)
     LØAD          GAGE 8                 GAGE 9                 GAGE 10

     (LB)       EXP.     THEØR.        EXP.     THEØR.        EXP.     THEØR.

       0.         0.       -0.           0.       -0.           0.       -0.
     990.      -960.     -422.        -600.     -422.       -1290.     -712.
    1980.     -1410.     -844.       -1110.     -844.       -2340.    -1425.
    2990.     -1920.    -1275.       -1620.    -1275.       -3090.    -2152.
    4020.     -2340.    -1715.       -2220.    -1715.       -3870.    -2893.
    5050.     -2940.    -2154.       -2730.    -2154.       -4530.    -3634.
    5990.     -3360.    -2555.       -3240.    -2555.       -5250.    -4310.
    7000.     -3810.    -2986.       -3720.    -2986.       -5760.    -5037.
    8020.     -4200.    -3421.       -4290.    -3421.       -6480.    -5771.
    9020.     -4740.    -3847.       -4740.    -3847.       -7290.    -6491.
   10020.     -5100.    -4274.       -5220.    -4274.       -7890.    -7210.
   11120.     -5670.    -4743.       -5730.    -4743.       -8340.    -8002.
   11980.     -6000.    -5109.       -6300.    -5109.       -9180.    -8621.

   11000.     -5730.    -4692.       -5790.    -4692.       -8460.    -7916.
    9980.     -5220.    -4256.       -5430.    -4256.       -7860.    -7182.
    9000.     -4830.    -3839.       -4830.    -3839.       -7110.    -6476.
    8000.     -4410.    -3412.       -4470.    -3412.       -6600.    -5757.
    6960.     -4080.    -2968.       -3990.    -2968.       -6060.    -5008.
    6000.     -3510.    -2559.       -3600.    -2559.       -5400.    -4318.
    5000.     -3120.    -2133.       -2940.    -2133.       -4680.    -3598.
    4000.     -2460.    -1706.       -2460.    -1706.       -3990.    -2878.
    3000.     -2130.    -1280.       -1920.    -1280.       -3210.    -2159.
    2000.     -1530.     -853.       -1410.     -853.       -2430.    -1439.
    1010.     -1080.     -431.        -780.     -431.       -1410.     -727.
       0.      -120.       -0.        -120.       -0.         -60.       -0.

SLØPES (PSI/KIP)

   LØAD CYCLE   -478.     -427.        -516.     -427.        -720.     -720.
 UNLØAD CYCLE   -486.     -427.        -512.     -427.        -725.     -720.
LAST 5 PØINTS   -453.     -427.        -499.     -427.        -641.     -720.
ØN LØAD CYCLE
```

```
                                  TEST NUMBER  5

                            DEFLECTIØNS (INCHES/10000.)
     LØAD            TØTAL                 ARM 1                 ARM 2
     (LB)       EXP.     THEØR.       EXP.      THEØR.      EXP.     THEØR.

        0.       0.0       0.0         0.0        0.0        0.0       0.0
      990.      42.0      -4.5        -0.5       -3.1       16.2       3.1
     1980.      58.5      -9.1        -0.5       -6.2       23.7       6.2
     2990.      71.0     -13.7         0.7       -9.4       28.2       9.4
     4020.      83.3     -18.4         4.5      -12.6       31.2      12.6
     5050.      91.5     -23.2         9.0      -15.9       36.2      15.9
     5990.     100.0     -27.5        12.0      -18.8       38.2      18.8
     7000.     108.3     -32.1        16.0      -22.0       41.2      22.0
     8020.     116.8     -36.8        20.0      -25.2       44.2      25.2
     9020.     125.2     -41.4        23.0      -28.3       47.2      28.3
    10020.     133.4     -46.0        27.8      -31.5       50.2      31.5
    11120.     139.6     -51.0        31.9      -34.9       53.2      34.9
    11980.     146.0     -54.9        36.0      -37.6       56.2      37.6

    11000.     146.0     -50.4        35.2      -34.5       56.2      34.5
     9980.     141.8     -45.8        33.2      -31.3       56.2      31.3
     9000.     136.8     -41.3        31.0      -28.3       56.2      28.3
     8000.     132.2     -36.7        28.0      -25.1       51.4      25.1
     6960.     124.8     -31.9        23.0      -21.9       51.2      21.9
     6000.     116.2     -27.5        18.5      -18.8       50.7      18.8
     5000.     108.4     -22.9        14.0      -15.7       49.5      15.7
     4000.     102.0     -18.3         9.0      -12.6       44.2      12.6
     3000.      91.8     -13.8         4.7       -9.4       41.0       9.4
     2000.      81.0      -9.2         2.2       -6.3       29.2       6.3
     1010.      65.2      -4.6         2.2       -3.2       29.2       3.2
        0.      22.0       0.0         1.0        0.0        9.2       0.0

SLØPES (TENTHS/KIP)

   LØAD CYCLE           10.5       4.6         3.3        3.1        3.9       3.1
  UNLØAD CYCLE           9.5       4.6         3.6        3.1        3.6       3.1
 LAST 5 PØINTS           7.3       4.6         4.1        3.1        3.0       3.1
  ØN LØAD CYCLE
```

```
                                        TEST NUMBER  6

                                      RING STRESSES (PSI)

       LØAD             GAGE 1              GAGE 2              GAGE 3              GAGE 4

       (LB)        EXP.    THEØR.      EXP.    THEØR.      EXP.    THEØR.      EXP.    THEØR.

         0.          0.        0.        0.       -0.        0.        0.        0.       -0.
       980.        600.      211.     -240.     -266.      600.      474.     -600.     -378.
      1980.        660.      427.     -270.     -538.     1080.      958.    -1080.     -764.
      3000.        780.      647.     -300.     -815.     1500.     1451.    -1650.    -1157.
      4020.        810.      868.     -330.    -1093.     2100.     1944.    -2100.    -1551.
      5020.        900.     1083.     -390.    -1364.     2580.     2428.    -2550.    -1936.
      6000.        960.     1295.     -510.    -1631.     3000.     2902.    -3090.    -2314.
      7000.       1200.     1511.     -600.    -1903.     3600.     3386.    -3600.    -2700.
      8010.       1230.     1729.     -720.    -2177.     4020.     3874.    -4050.    -3089.
      9020.       1590.     1947.     -900.    -2452.     4500.     4363.    -4500.    -3479.
     10010.       1620.     2160.     -960.    -2721.     4920.     4842.    -4980.    -3861.
     10980.       1710.     2369.    -1020.    -2984.     5400.     5311.    -5520.    -4235.
     12060.       1770.     2603.    -1050.    -3278.     5850.     5833.    -5970.    -4652.

     10980.       1650.     2369.     -960.    -2984.     5670.     5311.    -5400.    -4235.
     10020.       1500.     2162.     -930.    -2723.     5160.     4847.    -4950.    -3865.
      9000.       1380.     1942.     -870.    -2446.     4950.     4353.    -4440.    -3471.
      7990.       1260.     1724.     -780.    -2172.     4560.     3865.    -3990.    -3082.
      7000.       1110.     1511.     -720.    -1903.     4050.     3386.    -3540.    -2700.
      5980.        930.     1290.     -630.    -1625.     3480.     2893.    -3030.    -2306.
      5000.        960.     1079.     -540.    -1359.     2940.     2418.    -2550.    -1928.
      4040.        840.      872.     -480.    -1098.     2400.     1954.    -2130.    -1558.
      2960.        810.      639.     -420.     -805.     1740.     1432.    -1500.    -1142.
      2000.        600.      432.     -300.     -544.     1200.      967.    -1140.     -771.
       960.        570.      207.     -480.     -261.      510.      464.     -600.     -370.
         0.         90.        0.     -120.       -0.     -120.        0.        0.       -0.

SLØPES (PSI/KIP)

  LØAD CYCLE       129.      216.      -86.     -272.      484.      484.     -490.     -386.
 UNLØAD CYCLE      119.      216.      -69.     -272.      529.      484.     -485.     -386.
LAST 5 PØINTS      119.      216.      -77.     -272.      453.      484.     -483.     -386.
ØN LØAD CYCLE
```

```
                                  TEST NUMBER  6


                                ARM STRESSES (PSI)
      LØAD            GAGE 5                 GAGE 6                  GAGE 7

      (LB)        EXP.     THEØR.        EXP.     THEØR.        EXP.     THEØR.

         0.         0.         0.          0.         0.          0.        -0.
       980.       750.       680.        600.       381.       -840.      -735.
      1980.      1140.      1373.        750.       769.      -1590.     -1486.
      3000.      1650.      2081.       1110.      1166.      -2130.     -2251.
      4020.      2160.      2788.       1560.      1562.      -2610.     -3016.
      5020.      2730.      3482.       1920.      1951.      -3030.     -3767.
      6000.      3240.      4162.       2220.      2332.      -3570.     -4502.
      7000.      3810.      4855.       2670.      2720.      -4140.     -5252.
      8010.      4230.      5556.       3000.      3113.      -4770.     -6010.
      9020.      4800.      6256.       3420.      3505.      -5250.     -6768.
     10010.      5250.      6943.       3630.      3890.      -5850.     -7511.
     10980.      5700.      7616.       3810.      4267.      -6330.     -8238.
     12060.      6210.      8365.       4080.      4687.      -7020.     -9049.

     10980.      5970.      7616.       4140.      4267.      -6450.     -8238.
     10020.      5670.      6950.       4170.      3894.      -6000.     -7518.
      9000.      5400.      6242.       4200.      3497.      -5430.     -6753.
      7990.      4980.      5542.       3960.      3105.      -4950.     -5995.
      7000.      4440.      4855.       3600.      2720.      -4410.     -5252.
      5980.      3690.      4148.       2940.      2324.      -3720.     -4487.
      5000.      3090.      3468.       2460.      1943.      -3330.     -3751.
      4040.      2520.      2802.       2010.      1570.      -2790.     -3031.
      2960.      1800.      2053.       1440.      1150.      -2280.     -2221.
      2000.      1200.      1387.        900.       777.      -1680.     -1501.
       960.       840.       666.        600.       373.       -900.      -720.
         0.      -120.         0.       -120.         0.         60.        -0.

 SLØPES (PSI/KIP)

    LØAD CYCLE    510.       694.        343.       389.       -556.      -750.
  UNLØAD CYCLE    566.       694.        419.       389.       -567.      -750.
 LAST 5 PØINTS    483.       694.        254.       389.       -555.      -750.
 ØN LØAD CYCLE
```

```
                                     TEST NUMBER  6


                                   ARM STRESSES (PSI)
      LØAD              GAGE 8                 GAGE 9                 GAGE 10

      (LB)          EXP.     THEØR.        EXP.     THEØR.        EXP.     THEØR.

         0.           0.       -0.           0.       -0.           0.       -0.
       980.        -780.     -418.        -540.     -418.       -1410.     -705.
      1980.       -1170.     -844.       -1140.     -844.       -2280.    -1425.
      3000.       -1740.    -1280.       -1740.    -1280.       -3150.    -2159.
      4020.       -2100.    -1715.       -2070.    -1715.       -3870.    -2893.
      5020.       -2640.    -2141.       -2790.    -2141.       -4560.    -3612.
      6000.       -3090.    -2559.       -3240.    -2559.       -5070.    -4318.
      7000.       -3540.    -2986.       -3720.    -2986.       -5790.    -5037.
      8010.       -4140.    -3416.       -4200.    -3416.       -6480.    -5764.
      9020.       -4500.    -3847.       -4770.    -3847.       -7170.    -6491.
     10010.       -5100.    -4269.       -5220.    -4269.       -7860.    -7203.
     10980.       -5490.    -4683.       -5730.    -4683.       -8550.    -7901.
     12060.       -6000.    -5144.       -6180.    -5144.       -9120.    -8678.

     10980.       -5520.    -4683.       -5700.    -4683.       -8550.    -7901.
     10020.       -5250.    -4274.       -5340.    -4274.       -7890.    -7210.
      9000.       -4740.    -3839.       -4950.    -3839.       -7320.    -6476.
      7990.       -4350.    -3408.       -4470.    -3408.       -6780.    -5750.
      7000.       -3780.    -2986.       -4020.    -2986.       -6090.    -5037.
      5980.       -3330.    -2550.       -3450.    -2550.       -5340.    -4303.
      5000.       -2820.    -2133.       -3000.    -2133.       -4650.    -3598.
      4040.       -2400.    -1723.       -2310.    -1723.       -3900.    -2907.
      2960.       -1800.    -1262.       -1800.    -1262.       -3180.    -2130.
      2000.       -1380.     -853.       -1200.     -853.       -2280.    -1439.
       960.        -750.     -409.        -750.     -409.       -1230.     -691.
         0.          60.       -0.          60.       -0.           0.       -0.

 SLØPES (PSI/KIP)

    LØAD CYCLE     -485.     -427.        -513.     -427.        -719.     -720.
  UNLØAD CYCLE     -499.     -427.        -523.     -427.        -749.     -720.
 LAST 5 PØINTS     -468.     -427.        -489.     -427.        -661.     -720.
 ØN LØAD CYCLE
```

```
                              TEST NUMBER  6


                        DEFLECTIØNS (INCHES/10000.)
     LØAD          TØTAL                  ARM 1                  ARM 2
     (LB)      EXP.    THEØR.         EXP.     THEØR.        EXP.     THEØR.

       0.       0.0       0.0          0.0        0.0         0.0        0.0
     980.      21.7      -4.5          0.0       -3.1        16.0        3.1
    1980.      35.5      -9.1          0.0       -6.2        23.5        6.2
    3000.      47.7     -13.8          0.2       -9.4        27.5        9.4
    4020.      56.5     -18.4          3.8      -12.6        30.8       12.6
    5020.      64.5     -23.0          7.5      -15.8        34.0       15.8
    6000.      73.3     -27.5         11.0      -18.8        36.7       18.8
    7000.      81.0     -32.1         15.0      -22.0        39.0       22.0
    8010.      89.3     -36.7         18.4      -25.2        42.0       25.2
    9020.      97.7     -41.4         22.2      -28.3        45.5       28.3
   10010.     105.9     -45.9         26.0      -31.4        47.6       31.4
   10980.     111.3     -50.4         29.9      -34.5        50.8       34.5
   12060.     114.5     -55.3         33.9      -37.9        55.0       37.9

   10980.     114.5     -50.4         33.2      -34.5        55.8       34.5
   10020.     113.5     -46.0         31.7      -31.5        55.8       31.5
    9000.     107.0     -41.3         28.4      -28.3        55.8       28.3
    7990.     105.4     -36.6         25.0      -25.1        55.4       25.1
    7000.      97.4     -32.1         21.0      -22.0        53.0       22.0
    5980.      88.3     -27.4         16.0      -18.8        49.0       18.8
    5000.      81.0     -22.9         12.0      -15.7        47.3       15.7
    4040.      74.7     -18.5          7.2      -12.7        42.0       12.7
    2960.      64.5     -13.6          2.0       -9.3        39.8        9.3
    2000.      55.5      -9.2         -0.5       -6.3        35.0        6.3
     960.      38.5      -4.4         -0.5       -3.0        26.0        3.0
       0.      -4.0       0.0         -1.0        0.0         7.0        0.0
SLØPES (TENTHS/KIP)

    LØAD CYCLE      9.0       4.6          3.1        3.1         3.7        3.1
  UNLØAD CYCLE      9.1       4.6          3.6        3.1         3.7        3.1
 LAST 5 PØINTS      6.3       4.6          3.8        3.1         3.1        3.1
  ØN LØAD CYCLE
```

```
                                   TEST NUMBER  7


                           BRACKET DEFLECTIØNS (INCHES/10000.)
      LØAD            TØTAL                  ARM 4                  ARM 1
      (LB)        EXP.      THEØR.      EXP.      THEØR.      EXP.      THEØR.

         0.        0.0        0.0        0.0        0.0        0.0        0.0
       980.       34.5        4.7        9.0        3.0        0.0        3.0
      1980.       47.7        9.5       17.5        6.1        0.0        6.1
      3000.       59.2       14.5       24.0        9.2        0.0        9.2
      4000.       68.5       19.3       30.0       12.2        2.7       12.2
      5000.       80.0       24.1       35.0       15.3        6.7       15.3
      6000.       89.0       28.9       40.0       18.3       10.5       18.3
      7000.       96.2       33.7       45.0       21.4       14.7       21.4
      8020.      101.5       38.7       50.0       24.5       18.3       24.5
      9020.      113.7       43.5       55.0       27.6       21.5       27.6
     10010.      121.5       48.3       59.5       30.6       25.5       30.6
     10980.      126.9       52.9       64.0       33.6       28.7       33.6
     11980.      133.6       57.8       68.2       36.6       32.5       36.6

     10980.      133.5       52.9       67.5       33.6       32.4       33.6
     10020.      130.0       48.3       64.5       30.6       31.7       30.6
      9000.      126.0       43.4       60.0       27.5       29.5       27.5
      8000.      118.0       38.6       57.5       24.5       27.7       24.5
      6960.      109.8       33.6       52.5       21.3       22.7       21.3
      6000.      101.6       28.9       47.5       18.3       18.5       18.3
      5000.       95.0       24.1       41.5       15.3       13.5       15.3
      4000.       86.3       19.3       35.7       12.2        9.5       12.2
      3000.       76.3       14.5       30.0        9.2        5.5        9.2
      2000.       64.8        9.6       22.6        6.1        2.5        6.1
      1000.       49.0        4.8       14.0        3.1        2.3        3.1
         0.       -6.5        0.0        3.0        0.0        1.5        0.0

 SLØPES (TENTHS/KIP)

    LØAD CYCLE     9.9        4.8        5.5        3.1        3.0        3.1

   UNLØAD CYCLE   10.4        4.8        5.7        3.1        3.3        3.1

   LAST 5 PØINTS   7.8        4.8        4.6        3.1        3.6        3.1
   ØN LØAD CYCLE
```

```
                                   TEST NUMBER  8

                                 RING STRESSES (PSI)

         LØAD         GAGE 1              GAGE 2              GAGE 3              GAGE 4

         (LB)      EXP.    THEØR.      EXP.    THEØR.      EXP.    THEØR.      EXP.    THEØR.

           0.        0.        0.        0.       -0.        0.        0.        0.       -0.
        1050.      420.      227.     -180.     -285.      630.      508.     -630.     -405.
        1980.      450.      427.     -210.     -538.      990.      958.    -1170.     -764.
        3000.      630.      647.     -180.     -815.     1650.     1451.    -1620.    -1157.
        4020.      690.      868.     -300.    -1093.     2010.     1944.    -2190.    -1551.
        5020.     1020.     1083.     -330.    -1364.     2520.     2428.    -2610.    -1936.
        5990.      930.     1293.     -450.    -1628.     3000.     2897.    -3210.    -2310.
        7000.     1080.     1511.     -540.    -1903.     3570.     3386.    -3630.    -2700.
        8060.     1110.     1739.     -630.    -2191.     3960.     3899.    -4200.    -3109.
        9020.     1320.     1947.     -780.    -2452.     4440.     4363.    -4620.    -3479.
       10010.     1320.     2160.     -870.    -2721.     4890.     4842.    -5160.    -3861.
       11040.     1530.     2382.     -900.    -3001.     5610.     5340.    -5610.    -4258.
       12070.     1530.     2605.     -900.    -3281.     5850.     5838.    -6120.    -4655.

       11000.     1530.     2374.     -900.    -2990.     5490.     5321.    -5490.    -4243.
       10010.     1320.     2160.     -840.    -2721.     5220.     4842.    -5100.    -3861.
        9000.     1260.     1942.     -780.    -2446.     5010.     4353.    -4530.    -3471.
        7990.     1050.     1724.     -780.    -2172.     4530.     3865.    -4140.    -3082.
        6960.      990.     1502.     -600.    -1892.     4110.     3367.    -3510.    -2684.
        5980.      840.     1290.     -600.    -1625.     3450.     2893.    -3180.    -2306.
        4970.      810.     1073.     -450.    -1351.     2940.     2404.    -2610.    -1917.
        3990.      630.      861.     -420.    -1084.     2310.     1930.    -2160.    -1539.
        3000.      570.      647.     -210.     -815.     1800.     1451.    -1560.    -1157.
        1950.      390.      421.     -300.     -530.     1050.      943.    -1140.     -752.
        1000.      360.      216.     -330.     -272.      540.      484.     -600.     -386.
           0.     -150.        0.        0.       -0.     -120.        0.     -120.       -0.

SLØPES (PSI/KIP)

   LØAD CYCLE      116.      216.      -78.     -272.      487.      484.     -502.     -386.
  UNLØAD CYCLE     128.      216.      -75.     -272.      528.      484.     -492.     -386.
LAST 5 PØINTS      104.      216.      -65.     -272.      493.      484.     -481.     -386.
ØN LØAD CYCLE
```

```
                              TEST NUMBER  8


                             ARM STRESSES (PSI)
      LØAD          GAGE 5                 GAGE 6                 GAGE 7

      (LB)        EXP.     THEØR.        EXP.     THEØR.        EXP.     THEØR.

        0.          0.         0.          0.         0.          0.        -0.
     1050.        810.       728.        510.       408.      -1050.      -788.
     1980.       1230.      1373.        960.       769.      -1560.     -1486.
     3000.       1680.      2081.       1200.      1166.      -2040.     -2251.
     4020.       2280.      2788.       1590.      1562.      -2610.     -3016.
     5020.       2820.      3482.       2010.      1951.      -3120.     -3767.
     5990.       3270.      4155.       2250.      2328.      -3630.     -4494.
     7000.       3810.      4855.       2730.      2720.      -4170.     -5252.
     8060.       4320.      5590.       3000.      3132.      -4740.     -6047.
     9020.       4860.      6256.       3330.      3505.      -5160.     -6768.
    10010.       5310.      6943.       3570.      3890.      -5790.     -7511.
    11040.       5850.      7657.       3960.      4290.      -6180.     -8283.
    12070.       6300.      8372.       4110.      4690.      -6840.     -9056.

    11000.       6120.      7630.       4350.      4275.      -6240.     -8253.
    10010.       5790.      6943.       4200.      3890.      -5850.     -7511.
     9000.       5520.      6242.       4260.      3497.      -5250.     -6753.
     7990.       5100.      5542.       4020.      3105.      -4800.     -5995.
     6960.       4560.      4827.       3720.      2705.      -4110.     -5222.
     5980.       3840.      4148.       3150.      2324.      -3720.     -4487.
     4970.       3240.      3447.       2670.      1931.      -3120.     -3729.
     3990.       2460.      2767.       1980.      1551.      -2700.     -2994.
     3000.       1980.      2081.       1440.      1166.      -2040.     -2251.
     1950.       1290.      1353.        960.       758.      -1530.     -1463.
     1000.        870.       694.        720.       389.       -810.      -750.
        0.          0.         0.          0.         0.        120.        -0.

SLØPES (PSI/KIP)

  LØAD CYCLE      514.       694.        341.       389.       -538.      -750.
 UNLØAD CYCLE     572.       694.        422.       389.       -559.      -750.
LAST 5 PØINTS     493.       694.        284.       389.       -520.      -750.
ØN LØAD CYCLE
```

```
                              TEST NUMBER  8


                           ARM STRESSES (PSI)

   LØAD          GAGE 8               GAGE 9               GAGE 10

   (LB)       EXP.     THEØR.      EXP.     THEØR.      EXP.     THEØR.

      0.         0.       -0.         0.       -0.         0.       -0.
   1050.      -780.     -448.      -690.     -448.     -1350.     -756.
   1980.     -1320.     -844.     -1080.     -844.     -2070.    -1425.
   3000.     -1710.    -1280.     -1650.    -1280.     -3030.    -2159.
   4020.     -2160.    -1715.     -2040.    -1715.     -3810.    -2893.
   5020.     -2700.    -2141.     -2790.    -2141.     -4560.    -3612.
   5990.     -3180.    -2555.     -3120.    -2555.     -5130.    -4310.
   7000.     -3570.    -2986.     -3780.    -2986.     -5850.    -5037.
   8060.     -4020.    -3438.     -4110.    -3438.     -6450.    -5800.
   9020.     -4500.    -3847.     -4770.    -3847.     -7110.    -6491.
  10010.     -5040.    -4269.     -5280.    -4269.     -7740.    -7203.
  11040.     -5430.    -4709.     -5850.    -4709.     -8490.    -7944.
  12070.     -6000.    -5148.     -6240.    -5148.     -9000.    -8686.

  11000.     -5430.    -4692.     -5880.    -4692.     -8340.    -7916.
  10010.     -5130.    -4269.     -5340.    -4269.     -7770.    -7203.
   9000.     -4620.    -3839.     -4920.    -3839.     -7170.    -6476.
   7990.     -4290.    -3408.     -4500.    -3408.     -6600.    -5750.
   6960.     -3720.    -2968.     -4020.    -2968.     -5940.    -5008.
   5980.     -3300.    -2550.     -3420.    -2550.     -5130.    -4303.
   4970.     -2730.    -2120.     -2940.    -2120.     -4500.    -3576.
   3990.     -2280.    -1702.     -2280.    -1702.     -3420.    -2871.
   3000.     -1800.    -1280.     -1800.    -1280.     -2880.    -2159.
   1950.     -1320.     -832.     -1200.     -832.     -2280.    -1403.
   1000.      -750.     -427.      -750.     -427.     -1380.     -720.
      0.       120.       -0.        30.       -0.       180.       -0.

SLØPES (PSI/KIP)

   LØAD CYCLE        -477.     -427.      -518.     -427.      -718.     -720.
  UNLØAD CYCLE       -492.     -427.      -529.     -427.      -741.     -720.
LAST 5 PØINTS        -487.     -427.      -531.     -427.      -645.     -720.
ØN LØAD CYCLE
```

```
                                TEST NUMBER  8
```

BRACKET DEFLECTIONS (INCHES/1000.)

```
   LØAD              TØTAL                   ARM 1                   ARM 3

   (LB)         EXP.     THEØR.         EXP.      THEØR.         EXP.     THEØR.

       0.        -0.0      -0.0         -0.0       -0.0           0.0       0.0
    1050.        50.8       4.8          0.1        3.3          26.5       3.3
    1980.        65.4       9.1          0.2        6.2          35.2       6.2
    3000.        76.0      13.8          0.2        9.4          41.8       9.4
    4020.        84.5      18.4          1.4       12.6          46.2      12.6
    5020.        93.3      23.0         15.5       15.8          51.0      15.8
    5990.       101.5      27.5         17.7       18.8          55.9      18.8
    7000.       110.1      32.1         20.6       22.0          60.0      22.0
    8060.       117.1      37.0         23.9       25.3          65.0      25.3
    9020.       124.0      41.4         24.6       28.3          70.0      28.3
   10010.       132.0      45.9         29.3       31.4          74.8      31.4
   11040.       139.0      50.6         32.4       34.7          79.0      34.7
   12070.       145.8      55.4         35.8       37.9          83.0      37.9

   11000.       142.0      50.4         35.9       34.5          83.0      34.5
   10010.       136.0      45.9         35.8       31.4          80.5      31.4
    9000.       130.0      41.3         35.8       28.3          76.8      28.3
    7990.       123.5      36.6         35.7       25.1          73.7      25.1
    6960.       116.0      31.9         35.7       21.9          70.0      21.9
    5980.       108.3      27.4         35.6       18.8          64.5      18.8
    4970.       100.2      22.8         34.0       15.6          59.9      15.6
    3990.        92.0      18.3         32.1       12.5          53.8      12.5
    3000.        83.2      13.8         26.6        9.4          47.5       9.4
    1950.        72.5       8.9         24.2        6.1          40.8       6.1
    1000.        57.2       4.6         24.1        3.1          31.0       3.1
       0.        -1.1      -0.0          ---       -0.0          -0.5       0.0

SLØPES (TENTHS/KIP)

     LØAD CYCLE          9.9       4.6          3.4        3.1           5.7       3.1
   UNLØAD CYCLE         10.4       4.6          1.3        3.1           6.3       3.1
  LAST 5 PØINTS          7.2       4.6          3.2        3.1           4.5       3.1
   ØN LØAD CYCLE
```

```
                                   TEST NUMBER  9

                        BRACKET DEFLECTIONS (INCHES/10000.)
      LOAD            TOTAL            ARM 2             ARM 4

      (LB)        EXP.    THEOR.     EXP.    THEOR.     EXP.    THEOR.

         0.       -0.0      0.0      -0.0      0.0       0.0      0.0
       990.       51.1      4.8       9.9      3.0       6.2      3.0
      2060.       66.5      9.9      13.4      6.3      13.5      6.3
      3000.       76.7     14.5      17.9      9.2      19.0      9.2
      4020.       85.8     19.4      18.9     12.3      25.0     12.3
      5020.       94.9     24.2      22.4     15.3      30.6     15.3
      5990.      103.1     28.9      26.1     18.3      35.8     18.3
      7000.      110.7     33.7      29.9     21.4      41.7     21.4
      8020.      119.1     38.7      31.9     24.5      46.0     24.5
      9020.      126.1     43.5      33.9     27.6      50.7     27.6
     10020.      134.1     48.3      35.4     30.6      56.0     30.6
     10980.      140.6     52.9      38.9     33.6      60.5     33.6
     12060.      147.9     58.1      42.1     36.9      65.3     36.9

     10940.      143.9     52.7      42.1     33.5      64.5     33.5
     10010.      138.1     48.3      42.0     30.6      62.0     30.6
      8960.      131.7     43.2      42.1     27.4      58.1     27.4
      7990.      125.1     38.5      42.1     24.4      54.0     24.4
      7000.      117.9     33.7       ---     21.4      49.2     21.4
      6000.      111.1     28.9       ---     18.3      43.2     18.3
      5010.      101.9     24.2       ---     15.3      38.0     15.3
      3970.       93.1     19.1       ---     12.1      31.7     12.1
      2970.       84.6     14.3       ---      9.1      26.0      9.1
      1960.       74.1      9.4       ---      6.0      18.3      6.0
       980.       58.6      4.7       ---      3.0       9.3      3.0
         0.       10.6      0.0       ---      0.0       1.0      0.0

SLOPES (TENTHS/KIP)

    LOAD CYCLE    10.1      4.8       3.1      3.1       5.4      3.1

   UNLOAD CYCLE   10.0      4.8       ---      3.1       5.8      3.1

   LAST 5 POINTS   7.2      4.8       2.5      3.1       4.8      3.1
   ON LOAD CYCLE
```

```
                              TEST NUMBER 10

                 SHIMS UNDER SUPPØRT BLØCKS ØF ARMS 1 AND 3
                            RING STRESSES (PSI)
    LØAD           GAGE 1              GAGE 2              GAGE 3              GAGE 4

    (LB)       EXP.     THEØR.     EXP.     THEØR.     EXP.     THEØR.     EXP.     THEØR.

      0.         0.         0.        0.       -0.        0.        0.        0.       -0.
    495.       990.       830.     -900.    -1043.      210.      259.     -300.     -195.
   1005.      1830.      1684.    -1800.    -2118.      390.      527.     -660.     -396.
   1500.      2760.      2514.    -2460.    -3160.      690.      786.     -930.     -591.
   2005.      3360.      3360.    -3210.    -4225.      900.     1051.    -1290.     -790.
   2500.      3900.      4190.    -3750.    -5267.     1200.     1310.    -1530.     -985.
   3000.      4530.      5028.    -4410.    -6321.     1470.     1572.    -1800.    -1182.
   3505.      5280.      5874.    -5130.    -7385.     1650.     1837.    -2130.    -1381.
   4000.      5880.      6704.    -5700.    -8428.     1890.     2096.    -2340.    -1576.
   4505.      6540.      7550.    -6300.    -9492.     2100.     2361.    -2700.    -1775.
   5005.      7140.      8388.    -6960.   -10546.     2250.     2623.    -2970.    -1972.

   4490.      6630.      7525.    -6420.    -9460.     2280.     2353.    -2580.    -1769.
   3990.      5880.      6687.    -6030.    -8407.     1980.     2091.    -2280.    -1572.
   3500.      5280.      5866.    -5580.    -7374.     1800.     1834.    -1950.    -1379.
   3000.      4590.      5028.    -5100.    -6321.     1800.     1572.    -1800.    -1182.
   2505.      4020.      4198.    -4350.    -5278.     1560.     1313.    -1500.     -987.
   1995.      3270.      3344.    -3540.    -4203.     1080.     1045.    -1140.     -786.
   1500.      2670.      2514.    -2670.    -3160.      870.      786.     -930.     -591.
   1000.      1920.      1676.    -1830.    -2107.      600.      524.     -600.     -394.
    500.      1020.       838.     -870.    -1053.      300.      262.     -180.     -197.
      0.       -60.         0.      270.       -0.       60.        0.      120.       -0.

SLØPES (PSI/KIP)

  LØAD CYCLE  1385.      1676.    -1356.    -2107.      469.      524.     -589.     -394.
UNLØAD CYCLE  1427.      1676.    -1496.    -2107.      498.      524.     -592.     -394.
LAST 5 PØINTS 1293.      1676.    -1252.    -2107.      401.      524.     -581.     -394.
ØN LØAD CYCLE
```

```
                              TEST NUMBER 10

                            ARM STRESSES (PSI)
     LØAD          GAGE 5               GAGE 6               GAGE 7

     (LB)       EXP.     THEØR.      EXP.     THEØR.      EXP.     THEØR.

       0.         0.        0.         0.        0.         0.       -0.
     495.       570.      687.       300.      385.      -660.     -743.
    1005.      1050.     1394.       720.      781.     -1200.    -1509.
    1500.      1650.     2080.      1080.     1166.     -1530.    -2252.
    2005.      2070.     2781.      1500.     1558.     -1770.    -3010.
    2500.      2580.     3467.      1800.     1943.     -2370.    -3753.
    3000.      3120.     4161.      2070.     2331.     -2610.    -4503.
    3505.      3480.     4861.      2250.     2723.     -3270.    -5261.
    4000.      3960.     5548.      2550.     3108.     -3780.    -6004.
    4505.      4410.     6248.      2790.     3500.     -4260.    -6762.
    5005.      4920.     6942.      3120.     3889.     -4680.    -7513.

    4490.      4710.     6228.      3180.     3489.     -4350.    -6739.
    3990.      4410.     5534.      3330.     3100.     -3840.    -5989.
    3500.      4140.     4854.      3360.     2720.     -3390.    -5254.
    3000.      3900.     4161.      3210.     2331.     -2880.    -4503.
    2505.      3330.     3474.      2970.     1946.     -2520.    -3760.
    1995.      2700.     2767.      2460.     1550.     -2160.    -2994.
    1500.      2070.     2080.      1950.     1166.     -1500.    -2252.
    1000.      1350.     1387.      1170.      777.     -1290.    -1501.
     500.       840.      693.       660.      389.      -630.     -751.
       0.        60.        0.         0.        0.       -60.       -0.

SLØPES (PSI/KIP)

   LØAD CYCLE   970.     1387.       617.      777.      -906.    -1501.
  UNLØAD CYCLE 1056.     1387.       760.      777.      -924.    -1501.
LAST 5 PØINTS   904.     1387.       527.      777.     -1024.    -1501.
ØN LØAD CYCLE
```

```
                                    TEST NUMBER 10


                                  ARM STRESSES (PSI)
      LØAD           GAGE 8                   GAGE 9                   GAGE 10

      (LB)        EXP.      THEØR.         EXP.      THEØR.         EXP.      THEØR.

        0.          0.         -0.           0.         -0.          ---         -0.
      495.       -570.       -422.        -720.       -422.          ---       -712.
     1005.      -1110.       -857.       -1200.       -857.          ---      -1446.
     1500.      -1590.      -1280.       -1740.      -1280.          ---      -2158.
     2005.      -1890.      -1710.       -2130.      -1710.          ---      -2885.
     2500.      -2370.      -2133.       -2790.      -2133.          ---      -3597.
     3000.      -2610.      -2559.       -3270.      -2559.          ---      -4317.
     3505.      -3210.      -2990.       -3720.      -2990.          ---      -5044.
     4000.      -3600.      -3412.       -4110.      -3412.          ---      -5756.
     4505.      -4020.      -3843.       -4620.      -3843.          ---      -6483.
     5005.      -4440.      -4269.       -5040.      -4269.          ---      -7202.

     4490.      -4140.      -3830.       -4770.      -3830.          ---      -6461.
     3990.      -3750.      -3403.       -4290.      -3403.          ---      -5742.
     3500.      -3390.      -2986.       -3990.      -2986.          ---      -5036.
     3000.      -3090.      -2559.       -3360.      -2559.          ---      -4317.
     2505.      -2610.      -2137.       -3090.      -2137.          ---      -3605.
     1995.      -2160.      -1702.       -2370.      -1702.          ---      -2871.
     1500.      -1710.      -1280.       -1890.      -1280.          ---      -2158.
     1000.      -1290.       -853.       -1290.       -853.          ---      -1439.
      500.       -690.       -427.        -840.       -427.          ---       -719.
        0.        -60.         -0.        -180.         -0.          ---         -0.

 SLØPES (PSI/KIP)

   LØAD CYCLE    -862.       -853.        -992.       -853.      -1208.      -1439.
  UNLØAD CYCLE   -889.       -853.       -1021.       -853.      -1194.      -1439.
 LAST 5 PØINTS   -892.       -853.        -886.       -853.      -1174.      -1439.
 ØN LØAD CYCLE
```

```
                   TEST NUMBER 10

        BRACKET DEFLECTIØN (INCHES/10000.)
        LØAD               TØTAL
            (LB)           EXP.      THEØR.

              0.           -0.0        0.0
            495.           71.5        8.8
           1005.           92.5       17.8
           1500.          107.1       26.5
           2005.          119.5       35.5
           2500.          131.7       44.2
           3000.          143.7       53.1
           3505.          154.5       62.0
           4000.          164.5       70.8
           4505.          175.5       79.7
           5005.          186.5       88.6

           4490.          182.7       79.5
           3990.          174.5       70.6
           3500.          165.5       61.9
           3000.          156.1       53.1
           2505.          146.0       44.3
           1995.          134.3       35.3
           1500.          121.7       26.5
           1000.          108.3       17.7
            500.           86.1        8.8
              0.           ---         0.0

      SLØPES (TENTHS/KIP)

          LØAD CYCLE       30.6       23.2
         UNLØAD CYCLE      38.1       17.7
        LAST 5 PØINTS      21.3       17.7
        ØN LØAD CYCLE
```

```
                    TEST NUMBER 11

HØRIZØNTAL DEFLECTIØNS ØF ARMS (INCHES/10000.)
       LØAD            ARM 1     ARM 2

       (LB)            EXP.      EXP.

         0.            -0.0      -0.0
       980.             5.5      -0.2
      1990.             7.6      -0.2
      3000.             9.6      -0.0
      4020.            11.6       1.0
      5030.            13.6       2.2
      5990.            15.3       3.3
      7000.            17.2       4.8
      8060.            19.1       5.9
      9020.            20.7       7.6
     10020.            22.3       9.4
     11040.            23.8      11.0
     11980.            25.3      13.3

     10980.            25.3      13.2
     10010.            25.3      13.2
      9000.            25.3      13.3
      7990.            24.8      13.5
      6960.            22.8      13.4
      5980.            20.0      12.3
      5000.            16.7      10.0
      3980.            13.2       8.0
      3000.            10.6       3.9
      1980.             8.1       1.7
      1020.             4.8       0.8
         0.             0.8       0.6
```

```
                 TEST NUMBER 12

HORIZONTAL DEFLECTIONS OF ARMS (INCHES/10000.)
      LOAD             ARM 1      ARM 2
      (LB)              EXP.       EXP.

        0.              -0.0       -0.0
      980.               9.4       -4.7
     1990.              11.1       -4.2
     3000.              13.1       -3.0
     3990.              15.4       -1.8
     5000.              17.8       -0.8
     5980.              19.3        0.9
     7070.              21.2        2.6
     8000.              22.8        4.4
     9000.              24.0        6.0
    10010.              25.0        8.1
    10980.              26.3        9.6
    12000.              27.6       11.4

    11000.              27.6       11.4
    10010.              27.6       11.4
     9000.              27.6       11.6
     8000.              27.2       11.5
     7010.              25.6       11.5
     5980.              22.3        9.4
     5000.              19.2        7.7
     3990.              16.5        4.6
     3000.              14.0        1.0
     2000.              12.0       -0.8
     1010.              10.0       -2.3
        0.               5.2       -2.4
```

```
                              TEST NUMBER 13


                         SUPPØRT BLØCKS LUBRICATED

                            RING STRESSES (PSI)

  LØAD          GAGE 1               GAGE 2               GAGE 3               GAGE 4

  (LB)       EXP.     THEØR.      EXP.     THEØR.      EXP.     THEØR.      EXP.     THEØR.

     0.        0.         0.        0.        -0.        0.         0.        0.        -0.
   980.      480.       211.     -150.      -266.      630.       474.     -510.      -378.
  1980.      540.       427.     -330.      -538.     1050.       958.    -1110.      -764.
  3000.      660.       647.     -390.      -815.     1620.      1451.    -1530.     -1157.
  4020.      660.       868.     -570.     -1093.     2100.      1944.    -2100.     -1551.
  5000.      720.      1079.     -630.     -1359.     2610.      2418.    -2580.     -1928.
  5990.      720.      1293.     -720.     -1628.     3030.      2897.    -3030.     -2310.
  7000.      870.      1511.     -810.     -1903.     3600.      3386.    -3570.     -2700.
  8020.      870.      1731.     -900.     -2180.     4140.      3879.    -4080.     -3093.
  9000.     1020.      1942.     -960.     -2446.     4590.      4353.    -4530.     -3471.
 10000.     1050.      2158.    -1050.     -2718.     5220.      4837.    -5070.     -3857.
 10980.     1140.      2369.    -1140.     -2984.     5610.      5311.    -5460.     -4235.
 11980.     1140.      2585.    -1260.     -3256.     6210.      5795.    -6060.     -4621.

 11000.     1140.      2374.    -1110.     -2990.     5820.      5321.    -5520.     -4243.
 10000.      990.      2158.    -1080.     -2718.     5460.      4837.    -4980.     -3857.
  8990.      960.      1940.    -1080.     -2443.     5040.      4348.    -4470.     -3467.
  8000.      870.      1726.     -930.     -2174.     4440.      3870.    -4020.     -3086.
  6970.      840.      1504.     -750.     -1894.     3900.      3371.    -3420.     -2688.
  6010.      690.      1297.     -690.     -1634.     3300.      2907.    -3000.     -2318.
  5000.      600.      1079.     -540.     -1359.     2820.      2418.    -2490.     -1928.
  3990.      480.       861.     -480.     -1084.     2310.      1930.    -1980.     -1539.
  3000.      600.       647.     -300.      -815.     1680.      1451.    -1470.     -1157.
  2020.      480.       436.     -270.      -549.     1170.       977.     -960.      -779.
  1010.      330.       218.     -120.      -275.      600.       489.     -420.      -390.
     0.        0.         0.      210.        -0.       30.         0.       30.        -0.

SLØPES (PSI/KIP)

  LØAD CYCLE  76.       216.      -99.      -272.      510.       484.     -500.      -386.
 UNLØAD CYCLE 85.       216.     -115.      -272.      538.       484.     -505.      -386.
LAST 5 PØINTS 67.       216.      -91.      -272.      521.       484.     -494.      -386.
ØN LØAD CYCLE
```

```
                              TEST NUMBER 13

                           ARM STRESSES (PSI)
     LØAD          GAGE 5              GAGE 6              GAGE 7

     (LB)       EXP.     THEØR.      EXP.     THEØR.      EXP.     THEØR.

       0.          0.        0.         0.        0.         0.       -0.
     980.        960.      680.       720.      381.      -930.     -735.
    1980.       1560.     1373.      1020.      769.     -1740.    -1486.
    3000.       2130.     2081.      1530.     1166.     -2310.    -2251.
    4020.       2670.     2788.      1860.     1562.     -2820.    -3016.
    5000.       3210.     3468.      2280.     1943.     -3330.    -3751.
    5990.       3780.     4155.      2700.     2328.     -3840.    -4494.
    7000.       4260.     4855.      3030.     2720.     -4350.    -5252.
    8020.       4890.     5563.      3390.     3117.     -4890.    -6017.
    9000.       5400.     6242.      3840.     3497.     -5370.    -6753.
   10000.       5940.     6936.      4110.     3886.     -5910.    -7503.
   10980.       6480.     7616.      4530.     4267.     -6510.    -8238.
   11980.       6960.     8309.      4800.     4655.     -7020.    -8989.

   11000.       6660.     7630.      4800.     4275.     -6450.    -8253.
   10000.       6330.     6936.      4800.     3886.     -5940.    -7503.
    8990.       5910.     6235.      4680.     3494.     -5280.    -6745.
    8000.       5280.     5549.      4170.     3109.     -4860.    -6002.
    6970.       4620.     4834.      3750.     2709.     -4260.    -5230.
    6010.       4020.     4169.      3180.     2335.     -3810.    -4509.
    5000.       3420.     3468.      2790.     1943.     -3270.    -3751.
    3990.       2760.     2767.      2280.     1551.     -2700.    -2994.
    3000.       2220.     2081.      1770.     1166.     -2100.    -2251.
    2020.       1560.     1401.      1200.      785.     -1560.    -1516.
    1010.        930.      701.       810.      392.      -690.     -758.
       0.        120.        0.       -60.        0.        90.       -0.

SLØPES (PSI/KIP)

  LØAD CYCLE     562.      694.       390.      389.      -555.     -750.
 UNLØAD CYCLE    604.      694.       457.      389.      -575.     -750.
LAST 5 PØINTS    527.      694.       354.      389.      -545.     -750.
ØN LØAD CYCLE
```

```
                              TEST NUMBER 13


                            ARM STRESSES (PSI)
     LØAD          GAGE 8               GAGE 9               GAGE 10

     (LB)       EXP.     THEØR.      EXP.     THEØR.      EXP.     THEØR.

       0.         0.        -0.        0.        -0.        0.        -0.
     980.      -780.      -418.     -780.      -418.    -1140.      -705.
    1980.     -1380.      -844.    -1260.      -844.    -1920.     -1425.
    3000.     -1920.     -1280.    -1920.     -1280.    -2640.     -2159.
    4020.     -2460.     -1715.    -2340.     -1715.    -3330.     -2893.
    5000.     -2910.     -2133.    -3000.     -2133.    -3990.     -3598.
    5990.     -3420.     -2555.    -3420.     -2555.    -4710.     -4310.
    7000.     -3840.     -2986.    -3990.     -2986.    -5460.     -5037.
    8020.     -4230.     -3421.    -4380.     -3421.    -6150.     -5771.
    9000.     -4770.     -3839.    -5100.     -3839.    -6840.     -6476.
   10000.     -5250.     -4265.    -5460.     -4265.    -7440.     -7196.
   10980.     -5760.     -4683.    -6060.     -4683.    -8190.     -7901.
   11980.     -6240.     -5109.    -6570.     -5109.    -8760.     -8621.

   11000.     -5760.     -4692.    -6180.     -4692.    -8130.     -7916.
   10000.     -5310.     -4265.    -5670.     -4265.    -7530.     -7196.
    8990.     -4830.     -3834.    -5070.     -3834.    -6990.     -6469.
    8000.     -4350.     -3412.    -4620.     -3412.    -6330.     -5757.
    6970.     -3900.     -2973.    -4200.     -2973.    -5640.     -5016.
    6010.     -3450.     -2563.    -3540.     -2563.    -4980.     -4325.
    5000.     -2880.     -2133.    -2970.     -2133.    -4290.     -3598.
    3990.     -2460.     -1702.    -2400.     -1702.    -3570.     -2871.
    3000.     -1890.     -1280.    -1980.     -1280.    -2940.     -2159.
    2020.     -1410.      -862.    -1350.      -862.    -2160.     -1454.
    1010.      -600.      -431.     -660.      -431.    -1320.      -727.
       0.        30.        -0.       30.        -0.      120.        -0.

SLØPES (PSI/KIP)

  LØAD CYCLE    -499.      -427.     -534.      -427.     -712.      -720.
 UNLØAD CYCLE   -515.      -427.     -555.      -427.     -715.      -720.
LAST 5 PØINTS   -506.      -427.     -539.      -427.     -664.      -720.
ØN LØAD CYCLE
```

```
                  TEST NUMBER 13

        BRACKET DEFLECTIØN (INCHES/10000.)

        LØAD              TØTAL

           (LB)           EXP.      THEØR.

             0.           -0.0        0.0
           980.           31.8        4.5
          1980.           45.2        9.1
          3000.           57.5       13.8
          4020.           67.3       18.4
          5000.           78.0       22.9
          5990.           87.4       27.5
          7000.           96.8       32.1
          8020.          105.3       36.8
          9000.          113.4       41.3
         10000.          122.2       45.9
         10980.          130.6       50.4
         11980.          138.4       54.9

         11000.          133.0       50.4
         10000.          125.9       45.9
          8990.          118.0       41.2
          8000.          110.0       36.7
          6970.          101.2       32.0
          6010.           92.8       27.6
          5000.           83.6       22.9
          3990.           74.5       18.3
          3000.           65.0       13.8
          2020.           55.5        9.3
          1010.           42.0        4.6
             0.            1.0        0.0

   SLØPES (TENTHS/KIP)

       LØAD CYCLE         10.4        4.6
     UNLØAD CYCLE         10.4        4.6
    LAST 5 PØINTS          8.4        4.6
     ØN LØAD CYCLE
```

```
                              TEST NUMBER 14


                        SUPPØRT BLØCKS LUBRICATED
                           RING STRESSES (PSI)
   LØAD          GAGE 1              GAGE 2              GAGE 3              GAGE 4

   (LB)       EXP.    THEØR.      EXP.    THEØR.      EXP.    THEØR.      EXP.    THEØR.

     0.         0.       0.         0.      -0.          0.       0.         0.      -0.
  1990.       360.     429.      -420.    -541.      1020.     963.     -1140.    -768.
  4020.       600.     868.      -600.   -1093.      2160.    1944.     -2160.   -1551.
  5980.       660.    1290.      -810.   -1625.      3120.    2893.     -3150.   -2306.
  8010.       960.    1729.      -960.   -2177.      4200.    3874.     -4080.   -3089.
 10020.      1020.    2162.     -1140.   -2723.      5220.    4847.     -5160.   -3865.
 11980.      1260.    2585.     -1350.   -3256.      6180.    5795.     -6180.   -4621.

 10010.       990.    2160.     -1230.   -2721.      5490.    4842.     -5010.   -3861.
  7990.       930.    1724.     -1050.   -2172.      4440.    3865.     -3990.   -3082.
  5960.       750.    1286.      -810.   -1620.      3330.    2883.     -3000.   -2299.
  3980.       540.     859.      -630.   -1082.      2250.    1925.     -1920.   -1535.
  1970.       300.     425.      -420.    -535.      1020.     953.     -1020.    -760.
     0.        60.       0.        60.      -0.          0.       0.       150.      -0.
SLØPES (PSI/KIP)

  LØAD CYCLE   98.     216.      -104.    -272.       518.     484.      -509.    -386.
 UNLØAD CYCLE  96.     216.      -121.    -272.       553.     484.      -511.    -386.
LAST 5 PØINTS  84.     216.       -92.    -272.       508.     484.      -503.    -386.
ØN LØAD CYCLE
```

```
                              TEST NUMBER 14

                            ARM STRESSES (PSI)
    LØAD           GAGE 5                 GAGE 6                 GAGE 7

    (LB)       EXP.     THEØR.        EXP.     THEØR.        EXP.     THEØR.

       0.         0.        0.          0.        0.           0.       -0.
    1990.      1560.     1380.       1080.      773.       -1860.    -1493.
    4020.      2730.     2788.       2100.     1562.       -2880.    -3016.
    5980.      3870.     4148.       2790.     2324.       -3870.    -4487.
    8010.      4920.     5556.       3720.     3113.       -4890.    -6010.
   10020.      5940.     6950.       4200.     3894.       -6060.    -7518.
   11980.      7050.     8309.       4950.     4655.       -7140.    -8989.

   10010.      6480.     6943.       4890.     3890.       -6060.    -7511.
    7990.      5190.     5542.       4140.     3105.       -4950.    -5995.
    5960.      3930.     4134.       3180.     2316.       -3870.    -4472.
    3980.      2760.     2761.       2220.     1547.       -2700.    -2986.
    1970.      1590.     1366.       1170.      766.       -1620.    -1478.
       0.         0.        0.        120.        0.         120.       -0.

SLØPES (PSI/KIP)

   LØAD CYCLE   573.      694.        406.      389.        -568.     -750.
  UNLØAD CYCLE  633.      694.        481.      389.        -600.     -750.
 LAST 5 PØINTS  537.      694.        356.      389.        -537.     -750.
 ØN LØAD CYCLE
```

```
                                   TEST NUMBER 14


                                 ARM STRESSES (PSI)
      LØAD           GAGE 8                  GAGE 9                 GAGE 10

      (LB)        EXP.     THEØR.         EXP.     THEØR.         EXP.     THEØR.

        0.          0.        -0.           0.        -0.           0.        -0.
     1990.      -1710.      -849.       -1170.      -849.       -2070.     -1432.
     4020.      -2610.     -1715.       -2460.     -1715.       -3540.     -2893.
     5980.      -3570.     -2550.       -3420.     -2550.       -4800.     -4303.
     8010.      -4470.     -3416.       -4620.     -3416.       -6300.     -5764.
    10020.      -5520.     -4274.       -5550.     -4274.       -7590.     -7210.
    11980.      -6360.     -5109.       -6510.     -5109.       -8940.     -8621.

    10010.      -5610.     -4269.       -5610.     -4269.       -7590.     -7203.
     7990.      -4560.     -3408.       -4620.     -3408.       -6300.     -5750.
     5960.      -3600.     -2542.       -3450.     -2542.       -4920.     -4289.
     3980.      -2550.     -1697.       -2430.     -1697.       -3630.     -2864.
     1970.      -1530.      -840.       -1170.      -840.       -2370.     -1418.
        0.          0.        -0.         150.        -0.         120.        -0.
SLØPES (PSI/KIP)

   LØAD CYCLE     -510.      -427.        -544.      -427.        -726.      -720.
 UNLØAD CYCLE     -545.      -427.        -573.      -427.        -736.      -720.
LAST 5 PØINTS     -473.      -427.        -513.      -427.        -681.      -720.
ØN LØAD CYCLE
```

```
              TEST NUMBER 14

         BRACKET DEFLECTIØN (INCHES/10000.)

         LØAD              TØTAL

            (LB)           EXP.     THEØR.

              0.           -0.0        0.0
           1990.           45.8        9.1
           4020.           68.1       18.4
           5980.           88.0       27.4
           8010.          105.2       36.7
          10020.          123.0       46.0
          11980.          138.3       54.9

          10010.          126.0       45.9
           7990.          110.3       36.6
           5960.           92.0       27.3
           3980.           74.0       18.3
           1970.           55.3        9.0
              0.            2.0        0.0

      SLØPES (TENTHS/KIP)

         LØAD CYCLE        10.8        4.6
        UNLØAD CYCLE       11.4        4.6
       LAST 5 PØINTS        8.8        4.6
       ØN LØAD CYCLE
```

REFERENCES

REFERENCES

1. Blake, A.: "Deflection of a Thick Ring in Diametral Compression by Test and by Strength of Materials Theory", Journal of Applied Mechanics, Vo. 2, June, 1959, pp. 294-

2. Srinath, L. S., and Y.V.G. Acharya: "Stresses in a Circular Ring, Comparison of Theory with Experiment", Appl. Sci. Res., Section A., Vol. 4, 1954, pp. 189.

3. Acharya, Y.V.G., L. S. Srinath, C. N. Lakshminarayana, "Evaluation of Stresses in a Circular Ring by the Relaxation Method", Appl. Sci. Res., Section A, Vol. 3, 1953, page 415.

4. Leeman, E. R.: "Stresses in a Circular Ring, Analytical Solutions Compared with Photoelastic Evidence", Engineering, Vol. 181, No. 4701, April 1956, p. 201.

5. Conway, H. D., L. Chow, and G. W. Morgan: "Analysis of Deep Beams", Journal of Applied Mechanics, Vol. 18, June, 1951, p. 163.

6. Seeley, F. B., J. O. Smith: "Advanced Mechanics of Materials", Second Edition, John Wiley and Sons, New York, 1966, p. 53.

7. Timoshenko, S.: "Strength of Materials, Volume 2", McGraw-Hill, New York, 1949, p. 62.

8. Saxton, D. L.: "Determination of Horizontal Reactions and Flexibilities for V.W.W. Generator Lower Brackets Under Field Short Circuit Loading", Canadian Westinghouse Co. Ltd. Engineering Report No. 335, March, 1967.

9. Hooke, R., T. A. Jeeves: "Direct Search Solution of Numerical and Statistical Problems", J. Acm, Vol. 8, April, 1961, p. 212.

10. Siddall, J.N.: "Theory of Engineering Design", Unpublished manuscript, McMaster University, Hamilton, Ontario, 1965, Section 12.7.

11. Klingman, W. R., D. M. Himmelblau: "Nonlinear Programming with the Aid of a Multiple-Gradient Summation Technique", J. Acm. Vol. 11, No. 4, Oct. 1964, p. 400.

12. Griffith, R. E., R. A. Stewart: "A Nonlinear Programming Technique for the Optimization of Continuous Processing Systems", Management Science, Vol. 7, 1961, p. 379