INTEGRATION AND LAPLACE TRANSFORMATION

OF ORTHOGONAL SERIES

INTEGRATION AND LAPLACE TRANSFORMATION OF ORTHOGONAL SERIES

By

MILOŠ NOVOTNÝ, DIPL. MATH.

A Thesis

Submitted to the School of Graduate Studies

in Partial Fulfilment of the Requirements

for the Degree

Doctor of Philosopy

McMaster University

May 1972

DOCTOR OF PHILOSOPY (1972)
(Mathematics)

McMASTER UNIVERSITY
Hamilton, Ontario

TITLE: Integration and Laplace Transformation of Orthogonal Series

AUTHOR: Miloš Novotný, Dipl.Math. (Charles University, Prague)

SUPERVISOR: Professor C.E. Billigheimer

NUMBER OF PAGES: (xiv), 456

SCOPE AND CONTENTS: In the first part of this thesis the basic properties of classical orthogonal polynomials are derived from a unified theory. Then sufficient conditions for term-by-term integration and Laplace transformation of Fourier expansions in terms of an orthogonal system with respect to a weight function on a bounded or unbounded interval are given, and successively applied to Fourier expansions in terms of the trigonometric system, the classical orthogonal polynomials, the Haar system and eigenfunction expansions for ordinary linear differential equations with boundary conditions on both ends of a compact interval as well as in limit point and limit circle cases for an infinite interval. Finally a necessary and sufficient condition for representation of a complex function as a Laplace interval of $f \in L(0,2\pi)$ with period 2π is proved.

Abstract

Term-by-term integration and Laplace transformation of orthogonal series

Ph.D. Thesis by M. Novotný, Department of Mathematics

In the first part of this thesis the basic properties of the classical orthogonal polynomials, i.e. the Jacobi, Laguerre and Hermite polynomials, are derived from a unified theory without the necessity of dealing separately with very similar particular cases. In the past no attempt to present such a theory was complete in all respects.

In the sequel sufficient conditions for term-by-term integration and Laplace transformation of the Fourier expansion of $f \in L_w^2(a,b)$ in terms of an orthogonal system with respect to a weight function w on a bounded or unbounded interval (a,b) are given. When necessary, all functions are assumed to be extended periodically. Later the same problem is studied for a function $f \notin L_w^2(a,b)$ whose Fourier coefficients exist.

The preceding theory is applied to Fourier expansions in terms of the trigonometric system, the classical orthogonal polynomials, and the Haar system, and to eigenfunction expansions for ordinary linear differential equations with boundary conditions at both ends of a compact interval as well as in limit point and limit circle cases on $(0,+\infty)$. The preceding results also enable us to prove a necessary and sufficient condition for the representation of a complex function as a Laplace integral of $f \in L(0,2\pi)$ with period 2π.

Term-by-term integration and Laplace transformation of orthogonal expansions have never previously been investigated systematically. Most

of the results on this subject obtained in this thesis are new in the mathematical literature. Furthermore many of them can also find application in physics and engineering.

Acknowledgements

I consider it as my duty to thank every one who, whether directly or indirectly, helped me to complete my education, and finally to write this thesis.

In the first place, I would like to express my appreciation to the Canadian government, which, in the hardest hour of my life when I had lost all I had, accepted me as an immigrant, granted me support, and so, after twenty gloomy years, enabled me to regain freedom.

I am obliged to the chairman of the Department of Mathematics, McMaster University, Professor T. Husain, who, in spite of my unproven ability and insufficient knowledge of the English language, kindly offered me a scholarship.

I would like to thank my supervisor, Professor C. Billigheimer, to whom I am indebted not only for his farsighted guidance, advice and many valuable suggestions but also for his goodwill, kindness and friendly sympathy which I missed so much in the past.

Similarly I am grateful to my other teachers in McMaster University as well as to all those good people who took me into their protection after I had come to Canada with nothing but a suitcase in my hand and fifty dollars in my pocket.

I am obliged finally to the Russian invaders whose deeds in my old country brought me to the conviction that the highest aim of our lives is not a timid accomodation but the fight for what we love.

Hamilton, March 10, 1972 Miloš Novotný

Introduction

The aim of this thesis is to extend the theory of the classical orthogonal polynomials, and to investigate the possibility of the term-by-term integration and Laplace transformation of orthogonal expansions. We summarize here the most important results.

The first chapter (§§1.-4.) is introductory, and contains some more or less well-known basic facts we shall often apply in the sequel. It is not intended for systematic consecutive study.

The second chapter (§§5.-14.) deals with what we call the unified theory of the classical orthogonal polynomials. This theory consists in the following: It is possible to derive the differential equation, the Rodriguez formula, the recurrence relation, and the generating function for a system of orthogonal polynomials such that the corresponding weight function satisfies a certain differential equation with boundary conditions at both ends of the corresponding interval. Since the weight functions of all the classical orthogonal polynomials, i.e. the Jacobi, Laguerre and Hermite polynomials, also satisfy the assumptions required above, we are then able to explain all the basic facts concerning the classical orthogonal polynomials from a single point of view without having to deal separately with very similar particular cases. Conversely it is possible to prove that the only weight functions satisfying the differential equation with the boundary conditions mentioned

above are the weight functions which may be obtained from those of the classical orthogonal polynomials by a linear transformation of the independent variable. The most successful attempts to obtain such a theory were made by Jackson (1) and Tricomi (15),(32). Our aim has been to summarize, and then to extend and complete the results previously obtained using an approach similar to that of Jackson (10).

In the later chapters we investigate the possibility of the term-by-term integration and Laplace transformation of a Fourier expansion in terms of an orthogonal system with respect to a weight function on a bounded or unbounded subinterval (a,b) of the real axis. Where necessary all functions are assumed to be extended periodically. As far as we can judge from books and papers concerning the usual Fourier series, orthogonal polynomials, orthogonal expansions and the Laplace transformation for which excellent bibliographies may be found in the books by Hardy (8), Hobson (9), Zygmund (17), Bary (2), Szegö (14), Geronimus (6), Kaczmarz and Steinhaus (11), Alexits (1), Doetsch (5) and Widder (15), the term-by-term integration of such expansions was studied only in case of the trigonometric system and the system of Legendre polynomials. The research concerning the term-by-term integration of Legendre series probably culminated in a paper by Young (37) in 1919. As for the term-by-term Laplace transformation of orthogonal expansions, we do not know of any publication on this topic except for a paper published by the author in 1968, Novotný (29). Very numerous modern authors investigating orthogonal expansions seem in general to be most interested in convergence and summability problems (e.g. Alexits, Kaczmarz, Lorentz, Menchoff, Orlicz, Zygmund and many others). Those who work in the

theory of the Laplace transformation on the other hand mostly specialize in necessary and sufficient conditions for representation in terms of Laplace integrals of functions belonging to various prescribed classes (see Widder (16), p. 272-275, 306-324, (35) and (36), Heinig (24), and Leviatan (25)) in the operator calculus of Mikusiński, or in topological properties of the Laplace transformation (e.g. Dutta and Ganguli (21)).

Returning to our thesis, <u>the third chapter</u> (§§ 14.-21.) <u>deals with the term-by-term integration and Laplace transformation of a Fourier expansion of a function</u> $f \in L_w^2(a,b)$. Some general theorems based on completeness of the orthogonal system are proved in §§ 15., 17. and 18., and then successively applied to the Fourier expansions in terms of orthogonal and classical orthogonal polynomials (§§ 16. and 20.-21.). In all cases the resulting series converge absolutely and uniformly on compact subsets. As for the term-by-term Laplace transformation of a Fourier expansion in terms of the classical orthogonal polynomials, the restrictions $\alpha,\beta \in (-1,1)$ and $\alpha \in (-1,1)$ in the case of Jacobi and Laguerre polynomials respectively, and some other restrictions in the case of Hermite polynomials, seem to be necessary. Most of the proofs in this chapter are neither long nor difficult so that they can be presented even in non-specialist lectures.

<u>The fourth chapter</u> (§§ 22.-36.) <u>deals with the term-by term integration and Laplace transformation of a function</u> $f \in L_w^2(a,b)$, <u>whose Fourier coefficients with respect to a given orthogonal system exist</u>. Some general theorems are proved in § 23., and then successively applied to the Fourier expansion in terms of the Haar system (§§ 24.-26.), to the usual Fourier expansion of $f \in L(0,2\pi)$ (§ 29.), and to the Fourier expansion in terms of Tchebysheff polynomials (§ 31.). The famous equiconvergence theorems proved by Szegö in his well-known book (14), enable us to verify that, under certain additional assumptions, the term-by-term integration

of a Fourier expansion in terms of the Jacobi, Laguerre and Hermite polynomials is possible (§§ 32.-34.). In the prece ding three cases sufficient conditions for the integrated Fourier expansion to be uniformly convergent on compact subintervals are given. This makes it possible to us to compare its behavior with that of the integrated trigonometric Fourier series which always converges uniformly on $(-\infty,+\infty)$. Finally some results from approximation theory are used to prove the possibility of the term-by-term Laplace transformation of $f \in L(-1,1)$ in terms of Legendre polynomials. It seems to be difficult to prove more about the term-by-term Laplace transformation of the Fourier expansion with respect to the classical orthogonal polynomials on account of the possibly complicated behavior of the series near the terminal points of the interval (a,b).

In <u>the fifth chapter</u> (§§ 37.-39.) we apply the theorem of § 29. concerning the term-by-term Laplace transformation of the usual Fourier expansion of a function $f \in L(0,2\pi)$ with period 2π to prove a necessary and sufficient condition for a complex function F to be the Laplace transformation of a function $f \in L(0,2\pi)$ with period 2π in the half-plane $\operatorname{Re} z > 0$. Hence we derive the decomposition of the analytic continuation of the Laplace integral of $f \in L(0,2\pi)$ with period 2π into partial fractions.

<u>The sixth chapter</u> (§§ 40.-44.) <u>contains an application of the prece ding theory to linear differential equations</u>. In § 40. the term-by-term integration and Laplace transformation of eigenfunction expansions for linear differential equation of n-th order with boundary conditions on both ends of a compact interval are studied. In §§ 41.-44. the differential equation $-y'' + q(x)y = 0$ in the limit point case at infinity is investigated. If $\lim_{x \to +\infty} q(x) = +\infty$

the spectrum is discrete and a countable system of orthogonal eigenfunctions occurs, so that the results of the third chapter may be applied. Furthermore we proved that in some other cases in which the spectrum contains a continuous part the Laplace transformation of the expansion formula may be carried out in a similar way. Finally, in the limit circle case at infinity (§ 45.) we again have a discrete spectrum and a countable system of orthogonal eigenvalues so that the same approach as in the case where $\lim_{x \to +\infty} q(x) = +\infty$ is possible.

Analogous results may be obtained for term-by-term summation and transformation of vectors in terms of eigenvectors of difference equations discussed in Billigheimer (18a).

Each section except the introductory chapter ends with a remark pointing out in detail which results are new, and which may be found elsewhere in the literature.

We have tried to write everything as clearly as possible. Even auxiliary results are presented with full proofs, and nothing is "left to the reader as an easy exercise". The only exceptions which had to be made occur in § 32.-34., where a detailed proof of Szegő's equiconvergence theorems would have required too much space, and in the sixth chapter where references were given to the considera ble amount of background material required.

Finally, a few words about notation. Arabic numerals in parentheses, for example (3), denote particular formulae in the proof in question. Arabic numerals followed by periods, for example 3., denote particular paragraphs in the section concerned. Whenever we refer to a paragraph, for example 3., in another section, for example 21., the number of the section is indicated before the number of the paragraph, thus 21.3. Arabic numerals followed by a single parenthesis, for example 3), denote assumptions of the theorem in question. Roman numerals, for example III., denote particular statements of

the theorem concerned. Consequently it is necessary to distinguish (3), 3., 21.3, 3) and III. The letter K generally denotes the set of all finite complex numbers.

We believe that our results concerning the term-by-term integration and Laplace transformation of orthogonal expansions may find application in mathematical analysis, physics and engineering.

I would also like to thank Mrs. Claudia McCarty who carefully typed a difficult text.

Contents

Acknowledgements iv

Introduction v

Chapter 1.: Basic concepts

§ 1. Inner product spaces 2

§ 2. Hilbert spaces 25

§ 3. The $L_w^p(I)$-spaces 34

§ 4. Some dense subsets of $L_w^p(I)$ 40

Chapter 2.: A unified theory of the classical orthogonal polynomials

§ 5. Orthogonal polynomials in $L_w^2(I)$ 51

§ 6. The classical weight functions 59

§ 7. The differential equation for orthogonal polynomials 81

§ 8. Auxiliary results 86

§ 9. The Rodriguez theorem 92

§ 10. The standard orthogonal polynomials 111

§ 11. The recurrence formulae for orthogonal polynomials 117

§ 12. Further auxiliary results 127

§ 13. The generating function 132

§ 14. Expansion theorems, maximality and closure of some systems of orthogonal polynomials 148

Chapter 3.: The term-by-term integration and Laplace transformation of the Fourier expansion of $f \in L_w^2(a,b)$ with respect to an orthogonal system in $L_w^2(a,b)$

§15. The term-by-term integration of the Fourier expansion of $f \in L_w^2(a,b)$ 167

§16. The term-by-term integration of expansions of $f \in L_w^2(a,b)$ in terms of orthogonal polynomials in $L_w^2(a,b)$ 174

§17. The extension theorem 181

§18. The term-by-term Laplace transformation of the Fourier expansion of $f \in L_w^2(a,b)$ 184

§19. The term-by-term Laplace transformation of the usual Fourier expansion of $f \in L_w^2(a,b)$ 199

§20. The term-by-term Laplace transformation of the Fourier expansion of $f \in L_w^2(a,b)$ in terms of orthogonal polynomials in $L_w^2(a,b)$ 201

§21. The case of Hermite polynomials 205

Chapter 4.: The term-by-term integration and Laplace transformation of a Fourier expansion of $f \notin L_w^2(a,b)$ with respect to an orthogonal system in $L_w^2(a,b)$

§22. The Fourier expansion of $f \notin L_w^2(a,b)$ 216

§23. The term-by-term integration and Laplace transformation of a Fourier expansion of $f \notin L_w^2(a,b)$ 220

§24. The Haar system 229

§25. The term-by-term integration of a Fourier expansion with respect to the Haar system 249

§26. The term-by-term Laplace transformation of a Fourier expansion with respect to the Haar system 253

§27. The Phragmén-Lindelöf and Hausdorff-Young theorems 256

§28. Some special properties of the usual Fourier series 274

§ 29. The term-by-term Laplace transformation of the usual Fourier expansion of $f \in L(0,2\pi)$ 289

§ 30. Some special properties of the standard Tchebysheff polynomials 291

§ 31. The term-by-term integration and Laplace transformation of the Fourier expansion of $f \notin L_w^2(-1,1)$ in terms of Tchebysheff polynomials 301

§ 32. The term-by-term integration of the Fourier expansion of $f \notin L_w^2(-1,1)$ in terms of Jacobi polynomials 311

§ 33. The term-by-term integration of the Fourier expansion of $f \notin L_w^2(0,+\infty)$ in terms of Laguerre polynomials 323

§ 34. The term-by-term integration of the Fourier expansion of $f \notin L_w^2(-\infty,+\infty)$ in terms of Hermite polynomials 341

§ 35. Some special properties of the Legendre polynomials 349

§ 36. The term-by-term Laplace transformation of the Fourier expansion of $f \in L(-1,1)$ in terms of Legendre polynomials 361

Chapter 5.: A representation in terms of Laplace integrals

§ 37. Auxiliary results 364

§ 38. A necessary and sufficient condition for a complex function F to be the Laplace transformation of a function $f \in L(0,2\pi)$ with period 2π for all $\operatorname{Re} z \in (0,+\infty)$ 370

§ 39. The decomposition of the analytic continuation of the Laplace transformation of a fuction $f \in L(0,2\pi)$ with period 2π into partial fractions 382

Chapter 6.: The term-by-term integration and Laplace transformation of eigenfunction expansions for linear differential equations

§ 40. The term-by-term integration and Laplace transformation of eigenfunction expansions for a linear differential equation with boundary conditions on a closed and bounded interval 387

§41. Auxiliary results 397

§42. The integration of the expansion formula in the limit point case at infinity 427

§43. Stability theorems 433

§44. The Laplace transformation of the expansion formula in the limit point case at infinity 441

§45. The term-by-term integration and Laplace transformation of the expansion formula in the limit circle case at infinity 452

Bibliography 454

CHAPTER 1.:

Elementary concepts

§ 1. Inner product spaces

1. Definition. Suppose:

1) X is a linear space over the complex field K.

2) Given any ordered pair $[x,y] \in X \times X$ there exists a complex number (x,y) such that

(i) $(x,y) = \overline{(y,x)}$ for all $x,y \in X$,

(ii) $(\alpha_1 x_1 + \alpha_2 x_2, y) = \alpha_1(x_1,y) + \alpha_2(x_2,y)$ for all $x_1 x_2, y \in X$, $\alpha_1, \alpha_2 \in K$.

(iii) $(x,x) \geq 0$ for all $x \in X$.

(iv) $(x,x) = 0 \Leftrightarrow x = 0$.

Then (x,y) is termed the inner or scalar product of x with y, and X is an inner product space.

2. Theorem. Let X be an inner product space. Then

(v) $(x, \alpha_1 y_1 + \alpha_2 y_2) = \alpha_1(x,y_1) + \alpha_2(x,y_2)$ for all $x, y_1, y_2 \in X$, $\alpha_1, \alpha_2 \in K$.

(vi) $(0,x) = (x,0) = 0$ for all $x \in X$.

Proof. Easily follows from 1.

3. Theorem. Suppose:

1) X is an inner product space.

2) $\quad \| x \| = (x,x)^{\frac{1}{2}}$ <u>for all</u> $x \in X$.

<u>Then the following holds</u>:

I. $\quad |(x,y)| \leq \| x \| \, \| y \|$ <u>for all</u> $x, y \in X$. (<u>The Schwarz inequality</u>.)

II. $\quad \| x \|$ <u>for each</u> $x \in X$ <u>is a norm on</u> X.

<u>Proof</u>. I. If $x = 0$ or $y = 0$ the inequality reduces to equality by (vi) and 2). Let $0 \neq x, y \in X$. Then, for any $\alpha \in K$,

$$(1) \quad \begin{cases} 0 \overset{(iii)}{\leq} (x + \alpha y, x + \alpha y) \overset{(ii),(v)}{=} (x,x) + \alpha(y,x) + \overline{\alpha}(x,y) + \alpha\overline{\alpha}(x,y) \overset{(i),2)}{=} \\ \overset{(i),2)}{=} \| x \|^2 + \alpha(y,x) + \overline{\alpha(y,x)} + |\alpha|^2 \| y \|^2 = \| x \|^2 + 2\mathrm{Re}[\alpha(y,x)] + \\ + |\alpha|^2 \| y \|^2. \end{cases}$$

If $(y,x) = 0$ then, by (i), also $(x,y) = 0$ so that the inequality follows from 2) and (iii). Therefore let $(y,x) \neq 0$. Since α has been arbitrary $\arg \alpha$ may be chosen in such a way that $\alpha(y,x) < 0$. But then

$$(2) \quad \begin{cases} 2|\alpha| \, |(x,y)| \overset{(i)}{=} 2|\alpha| \, |(y,x)| \overset{\alpha(y,x)<0}{=} -2\alpha(y,x) \overset{\alpha(x,y)=\text{real}}{=} -2\mathrm{Re}[\alpha(x,y)] \overset{(1)}{=} \\ \overset{(1)}{=} \| x \|^2 + |\alpha|^2 \| y \|^2. \end{cases}$$

Having chosen $\arg \alpha$ we may next choose $|\alpha|$ in such a way that

$$(3) \qquad |\alpha| = \frac{\| x \|}{\| y \|} .$$

Setting (3) into (2) we obtain, after an easy computation, $|(x,y)| \leq \| x \| \, \| y \|$.

II. From 2) and 1. it easily follows that

(4) $\left\{ \begin{array}{l} \|x\| \geq 0 \text{ for all } x \in X; \ \|x\| = 0 \Longleftrightarrow x = 0; \ \|\alpha x\| = |\alpha| \|x\| \text{ for} \\ \text{all } x \in X, \ \alpha \in K. \end{array} \right.$

Finally

$$\|x+y\|^2 \overset{2)}{=} (x+y,x+y) \overset{(ii),(v)}{=} (x,y) + (y,x) + (x,y) + (y,y) \overset{(i)}{=}$$

$$\overset{(i)}{=} (x,x) + (x,y) + \overline{(x,y)} + (y,y) \overset{2)}{=} \|x\|^2 + 2\mathrm{Re}(x,y) + \|y\|^2 \leq$$

$$\leq \|x\|^2 + 2|(x,y)| + \|y\|^2 \overset{I.}{\leq} \|x\|^2 + 2\|x\|\|y\| + \|y\|^2 =$$

$$= (\|x\| + \|y\|)^2 \text{ for all } x,y \in X,$$

whence, by (4), $\|x+y\| \leq \|x\| + \|y\|$ for all $x,y \in X$, which proves the triangle inequality.

4. Definition. The norm $\|x\| = (x,x)^{\frac{1}{2}}$ for all $x \in X$ is said to be the standard norm in X. In the sequel $\|x\|$ will always denote the standard norm of $x \in X$.

5. Definition. Suppose:

1) X is an inner product space, A is any index set.

2) $x_\alpha \in X$ for all $\alpha \in A$.

3) $(x_\alpha, x_\beta) = 0$ for all $\alpha, \beta \in A$, $\alpha \neq \beta$.

Then $\{x_\alpha\}_{\alpha \in A}$ is said to be an orthogonal system in X;

Suppose next that

4) $\|x_\alpha\|^2 \overset{3.}{=} (x_\alpha, x_\alpha) = 1$ <u>for all</u> $\alpha \in A$.

<u>Then</u> $\{x_\alpha\}_{\alpha \in A}$ <u>is said to be an orthonormal system in</u> X.

<u>6. Theorem</u>. <u>Suppose</u>:

1) X <u>is an inner product space</u>.

2) $0 \neq x_0, x_1, \ldots$ <u>is an orthogonal system in</u> X.

<u>Then each finite subsystem</u> $x_0, x_1, \ldots, x_n$ <u>of</u> $x_0, x_1, \ldots$ <u>is linearly independent in</u> X.

<u>Proof</u>. Suppose that $x_0, x_1, \ldots, x_n$ is a finite linearly dependent subsystem of $x_0, x_1, \ldots$. Then there exist $\alpha_0, \alpha_1, \ldots, \alpha_n \in K$ such that

$$(1) \qquad \sum_{k=0}^{n} \alpha_k x_k = 0, \quad \alpha_m \neq 0 \text{ for some } 0 \leq m \leq n.$$

Consequently $\alpha_m \|x_m\|^2 \overset{2)}{=} \sum_{k=0}^{n} \alpha_k (x_k, x_m) \overset{1.}{=} \left(\sum_{k=0}^{n} \alpha_k x_k, x_m \right) \overset{(1)}{=} (0, x_m) \overset{2.}{=} 0.$

Since, by 2), $\|x_m\|^2 > 0$ it follows that $\alpha_m = 0$ in contradiction with (1).

<u>7. Definition</u>. <u>Suppose</u>:

1) X <u>is an inner product space</u>.

2) $x_0, x_1, \ldots, x_k \in X$.

<u>Then</u>

$$\Delta_k = \Delta(x_0, \ldots, x_k) = \begin{vmatrix} (x_0, x_0) & \ldots & (x_0, x_k) \\ \ldots & \ldots & \ldots \\ (x_k, x_0) & \ldots & (x_k, x_k) \end{vmatrix}$$

is said to be the Gram determinant of $x_0, x_1, \ldots, x_k$.

8. Theorem. Suppose:

1) X is an inner product space.

2) $x_0, x_1, \ldots, x_k \in X$.

3) Δ_k is the Gram determinant of $x_0, x_1, \ldots, x_k$.

Then Δ_k is real.

Proof. $$\overline{\Delta}_k \overset{3),7.}{=} \begin{vmatrix} \overline{(x_0,x_0)} & \ldots & \overline{(x_0,x_k)} \\ \ldots & \ldots & \ldots \\ \overline{(x_k,x_0)} & \ldots & \overline{(x_k,x_k)} \end{vmatrix} \overset{1.}{=} \begin{vmatrix} (x_0,x_0) & \ldots & (x_k,x_0) \\ \ldots & \ldots & \ldots \\ (x_0,x_k) & \ldots & (x_k,x_k) \end{vmatrix} \overset{7.}{=} \Delta_k$$

9. Theorem Suppose:

1) X is an inner product space.

2) $x_0, x_1, \ldots, x_k \in X$.

3) Δ_k is the Gram determinant of $x_0, x_1, \ldots, x_k$.

Then $x_0, x_1, \ldots, x_k$ are linearly independent in X if and only if $\Delta_k \neq 0$.

Proof I. Let $x_0, x_1, \ldots, x_k$ be linearly dependent in X. Then there exist $\alpha_0, \alpha_1, \ldots, \alpha_k \in K$ such that at least one of them is different from zero, and $\sum_{j=0}^{k} \alpha_j x_j = 0$. Hence $\sum_{j=0}^{k} \overline{\alpha}_j (x_i, x_j) \overset{1.}{=}$

$\overset{1.}{=} (x_i, \sum_{j=0}^{k} \alpha_j x_j) = (x_i, 0) \overset{2.}{=} 0$ for $i = 0, 1, \ldots, k$. Consequently the

system $\sum_{j=0}^{k} (x_i, x_j) t_j = 0$ $(i = 0,1,\ldots,k)$ of $k+1$ homeogenous linear equations with $k+1$ unknowns $t_0, t_1, \ldots, t_k$ with the determinant Δ_k has a non-zero solution $\overline{\alpha}_0, \ldots, \overline{\alpha}_k$. Hence $\Delta_k = 0$.

II. Let $\Delta_k = 0$. Then the columns of Δ_k are linearly dependent. Consequently there exist $\alpha_0, \alpha_1, \ldots, \alpha_k \in K$ such that at least one of them is different from zero, and besides $\sum_{j=0}^{k} \overline{\alpha}_j (x_i, x_j) = 0$ for $i = 0,1,\ldots,k$. Hence

$$\left\| \sum_{j=0}^{k} \alpha_j x_j \right\|^2 \overset{2.}{=} \left(\sum_{i=0}^{k} \alpha_i x_i, \sum_{j=0}^{k} \alpha_j x_j \right) \overset{1.}{=}$$

$$\overset{1.}{=} \sum_{i=0}^{k} \alpha_i \left(x_i, \sum_{j=0}^{k} \alpha_j x_j\right) \overset{2.}{=} \sum_{i=0}^{k} \alpha_i \sum_{j=0}^{k} \overline{\alpha}_j (x_i, x_j) = \sum_{i=0}^{k} \alpha_i 0 = 0$$

so that, by 3., $\sum_{j=0}^{k} \alpha_j x_j = 0$. Since at least one $\alpha_0, \ldots, \alpha_k$ is not zero $x_0, \ldots, x_k$ are linearly dependent in X.

<u>10. Lemma</u>. <u>Suppose</u>:

1) X <u>is an inner product space</u>.

2) $x_0, x_1, \ldots, x_n \in X$.

3) Δ_k <u>is the Gram determinant of</u> $x_0, x_1, \ldots, x_k$ $(k = 0,1,\ldots,n)$.

4) $y_0 = x_0$, $y_k = \begin{vmatrix} (x_0,x_0) & \ldots & (x_0,x_{k-1}) & x_0 \\ \ldots & \ldots & \ldots & \ldots \\ (x_k,x_0) & \ldots & (x_k,x_{k-1}) & x_k \end{vmatrix}$ <u>for</u> $k = 1,2,\ldots,n$.

Then the following holds:

I. There exist $\eta_{0,k},\dots,\eta_{k-1,k} \in K$ such that

$$y_k = \eta_{0,k}x_0 + \dots + \eta_{k-1,x}x_{k-1} + \Delta_{k-1}x_k \quad \text{for} \quad k = 1,=,\dots,n.$$

II. $$(y_k,x_h) = \begin{cases} 0 & \text{for} \quad h = 0,1,\dots,k-1 \\ \Delta_k & \text{for} \quad h = k \end{cases}, \quad k = 1,2,\dots,n.$$

III. $$\|y_0\|^2 = \Delta_0, \quad \|y_k\|^2 = \Delta_{k-1}\Delta_k \quad \text{for} \quad k = 1,2,\dots,n.$$

Proof I. Let $\eta_{0,k},\dots,\eta_{k-1,k},\eta_{k,k}$ be the respective cofactors of $x_0,\dots,x_{k-1},x_k$ in the determinant in 4) for $k = 0,1,\dots$. Obviously $\eta_{0,k},\dots,\eta_{k-1,k} \in K$ $\eta_{k,k} = \Delta_{k-1}$, and by the Laplace theorem $y_k = \eta_{0,k}x_0 + \dots + \eta_{k-1,k}x_{k-1} + \Delta_{k-1}x_k$ for $k = 1,2,\dots$.

II. Let $k = 1,2,\dots$. By I.,

$$(1) \quad \begin{cases} (y_k,x_h) \overset{\text{I.}}{=} \eta_{0,k}(x_0,x_h) + \dots + \eta_{k-1,k}(x_{k-1},x_h) + \Delta_{k-1}(x_k,x_h) \\ \text{for} \quad h = 0,1,\dots,k. \end{cases}$$

Since $\eta_{0,k},\dots,\eta_{k-1,k},\eta_{k,k} = \Delta_{k-1}$ are the respective cofactors of $x_0,x_1,\dots,x_k$ in the determinant in 4) it follows from (1) and Laplace's theorem that (y_k,x_h) is the same determinant as in 4) but with $(x_0,x_h),\dots,(x_k,x_h)$ instead of $x_0,\dots,x_k$ in the last column. Hence

$$(y_k,x_h) = \begin{vmatrix} (x_0,x_0) & \dots & (x_0,x_{k-1}) & (x_0,x_h) \\ \dots & \dots & \dots & \dots \\ (x_k,x_0) & \dots & (x_k,x_{k-1}) & (x_k,x_h) \end{vmatrix} = \begin{cases} 0 & \text{for} \quad h = 0,1,\dots,k-1, \\ \Delta_k & \text{for} \quad h = k. \end{cases}$$

III. Obviously

$$\|y_0\|^2 \overset{4)}{=} \|x_0\|^2 \overset{3.}{=} (x_0,x_0) \overset{7.}{=} \Delta_0.$$

$$\|y_k\|^2 \overset{3.}{=} (y_k,y_k) \overset{I.}{=} (y_k,\ \eta_{0,k}x_0 + \dots + \eta_{k-1,k}x_{k-1} + \Delta_{k-1}x_k) \overset{1.}{=}$$

$$\overset{1.}{=} \bar{\eta}_{0,k}(y_k,x_0) + \dots + \bar{\eta}_{k-1,k}(y_k,x_{k-1}) + \bar{\Delta}_{k-1}(y_k,x_k) \overset{II.}{=}$$

$$\overset{II.}{=} \bar{\Delta}_{k-1}\Delta_k \overset{8.}{=} \Delta_{k-1}\Delta_k \quad \text{for } k = 1,2,\dots,n.$$

<u>11. Theorem</u>. <u>Suppose</u>:

1) X <u>is an inner product space</u>.

2) $x_0,x_1,\dots,x_n \in X$.

3) $x_0,x_1,\dots,x_n$ <u>are linearly independent in</u> X.

4) Δ_k <u>is the Gram determinant of</u> $x_0,x_1,\dots,x_k$ <u>for all</u> $k = 0,1,\dots,n$.

<u>Then</u> $\Delta_k > 0$ <u>for</u> $k = 0,1,\dots,n$.

<u>Proof</u>. By 3) and 9.,

(1) $\Delta_k \neq 0 \ (k = 0,1,\dots,n)$.

Define $y_0,y_1,\dots,y_n$ as in 4) in 10. We prove that

(2) $y_k \neq 0 \ (k = 0,1,\dots,n)$.

For $k = 0$ that follows from $y_0 = x_0$ and 3). Fix any $k = 1,2,\dots,n$. By I. in 10.,

(3) $$y_k = \eta_{0,k}x_0 + \dots + \eta_{k-1,k}x_{k-1} + \Delta_{k-1}x_k \quad \text{for some } \eta_{0,k},\dots,\eta_{k-1,k} \in$$

If $y_k = 0$ then, by (3) and (1), $x_0,\dots,x_k$ would be linearly dependent in contradiction to 3). Hence (2) follows.

By III. in 10. and (2), $\Delta_0 = \|y_0\|^2 > 0$, $\Delta_{k-1}\Delta_k = \|y_k\|^2 > 0$ for $k = 1,2,\dots,n$. Therefore $\Delta_k > 0$ for $k = 0,1,\dots,n$.

12. The Schmidt orthogonalization theorem. Suppose:

1) X is an inner product space.

2) $x_0,x_1,\dots \in X$.

3) $x_0,x_1,\dots,x_k$ are linearly independent in X for all $k = 0,1,\dots$.

4) Δ_k is the Gram determinant of $x_0,x_1,\dots,x_k$ for all $k = 0,1,\dots$ (so that, by 3) and 11., $\Delta_k > 0$ for $k = 0,1,\dots$).

5) $$y_0 = x_0, y_k = \begin{vmatrix} (x_0,x_0) & \dots & (x_0,x_{k-1}) & x_0 \\ \dots & \dots & \dots & \dots \\ (x_k,x_0) & \dots & (x_k,x_{k-1}) & x_k \end{vmatrix} \quad \text{for } k = 1,2,\dots .$$

Then the following holds:

I. For each $k = 0,1,\dots,$ there exists a unique complex $(k+1)$-tuple $\eta_{0,k},\dots,\eta_{k,k}$ such that $y_k = \sum_{j=0}^{k} \eta_{j,k} x_j$; besides $\eta_{k,k} \neq 0$.

II. For each $k = 0,1,\dots,$ there exists a unique complex $(k+1)$-tuple $\xi_{0,k},\dots,\xi_{k,k}$ such that $x_k = \sum_{j=0}^{k} \xi_{j,k} y_j$; besides $\xi_{k,k} \neq 0$.

III. $y_0,y_1,\dots$ is an orthogonal system in X.

IV. $\|y_0\|^2 = \|x_0\|^2 = \Delta_0 > 0, \quad \|y_k\|^2 = \Delta_{k-1}\Delta_k > 0$

<u>for</u> $k = 1,2,\ldots$.

V. $\hat{y}_0 = \frac{1}{\sqrt{\Delta_0}}\, y_0, \quad \hat{y}_k = \frac{1}{\sqrt{\Delta_{k-1}\Delta_k}}\, y_k$ <u>for</u> $k = 1,2,\ldots,$

<u>is an orthonormal system in</u> X.

VI. <u>If</u> $y_0^*, y_1^*, \ldots$ <u>is another orthonormal system in</u> X <u>such that</u> $y_k^* = \sum_{j=0}^{k} \eta_{j,k}^* x_j$ <u>for some complex</u> (k+1)-<u>tuple</u> $\eta_{0,k}^*, \ldots, \eta_{k,k}^*$ <u>with</u> $\eta_{k,k}^* \neq 0$ $(k = 0,1,\ldots)$ <u>then</u> $y_k^* = \eta_k^* y_k$ <u>for some</u> $0 \neq \eta_k^* \in K$ $(k = 0,1,\ldots)$.

<u>Proof</u>. I. All except the uniqueness follows from I. in 10. If also $y_k = \sum_{j=0}^{k} \eta_{j,k}^* x_j$ for some complex (k+1)-tuple $\eta_{0,k}^*, \ldots, \eta_{k,k}^*$ then $\sum_{j=0}^{k} (\eta_{j,k}^* - \eta_{j,k}) x_j = y_k - y_k = 0$ so that, by 3), $\eta_{j,k}^* = \eta_{j,k}$ for $j = 0,1,\ldots,k;\ k = 0,1,\ldots$.

II. All except uniqueness follows from I. by solving the system $y_k = \sum_{j=0}^{k} \eta_{j,k} x_j$ $(k = 0,1,\ldots)$ with the unknowns $x_0, x_1 \ldots$ succesively, one equation after another. The uniqueness of the coefficients will be proved later.

III. Fix any $n = 1,2,\ldots$. Then, by 5). I. and II. in 10.,

$$(y_n, y_k) \overset{5),I.}{=} (y_n, \sum_{j=0}^{k} \eta_{j,k} x_j) \overset{1.}{=} \sum_{j=0}^{k} \bar{\eta}_{j,k} (y_n, x_j) \overset{II.\text{in } 10.}{=} 0$$

for all $k = 0,1,\ldots,n-1$.

IV. Follows from III. in 10.

By III., IV. and 6., $y_0, y_1, \ldots, y_k$ are linearly independent for all $k = 0,1,\ldots$. From this fact and II. the uniqueness of the coefficients $\xi_{j,k}$ follows analogously as in the proof of I. This completes the proof of II.

V. This follows from III. and IV.

VI. Let $y_0^*, y_1^*, \ldots$ be another orthogonal system in X such that

(1) $$y_k^* = \sum_{j=0}^{k} \eta_{j,k}^* y_j \quad \text{for some complex } (k+1)\text{-tuple } \eta_{0,k}^*, \ldots, \eta_{k,k}^*$$

with $\eta_{k,k}^* \neq 0$ $(k = 0,1,\ldots)$. Setting the formula in II. into (1) we have

(2) $$y_k^* = \sum_{j=0}^{k} \alpha_{j,k}^* y_j \quad \text{for some complex } (k+1)\text{-tuple } \alpha_{0,k}^*, \ldots, \alpha_{k,k}^*$$

with $\alpha_{k,k}^* \neq 0$ $(k = 0,1,\ldots)$. Solving the system (2) with the unknowns $y_0, y_1, \ldots$ successively, one equation after another, we obtain

(3) $$y_k = \sum_{j=0}^{k} \alpha_{j,k} y_j^* \quad \text{for some complex } (k+1)\text{-tuple } \alpha_{0,k}, \ldots, \alpha_{k,k}$$

with $\alpha_{k,k} \neq 0$ $(k = 0,1,\ldots)$.

By (2), $y_0^* = \alpha_{0,0}^* y_0$ for some $0 \neq \alpha_{0,0}^* \in K$. Now let $k = 1,2,\ldots;$ $h = 0,1,\ldots, k-1$. Then

$$\alpha_{h,k}^* = \frac{1}{\|y_h\|^2}\,\alpha_{h,k}^*\,(y_h,y_h) \overset{h<k}{=} \frac{1}{\|y_h\|^2}\sum_{j=0}^{k}\alpha_{j,k}^*(y_j,y_h) \overset{1.}{=}$$

$$\overset{1.}{=} \frac{1}{\|y_h\|^2}\left(\sum_{j=0}^{k}\alpha_{j,k}^*\,y_j,\ y_h\right) \overset{(2)}{=} \frac{1}{\|y_h\|^2}\,(y_k^*,y_h) \overset{(3)}{=}$$

$$\overset{(3)}{=} \frac{1}{\|y_h\|^2}\,(y_k^*,\ \sum_{j=0}^{h}\alpha_{j,h}\,y_j^*) \overset{2.}{=} \frac{1}{\|y_h\|^2}\sum_{j=0}^{h}\alpha_{j,h}\,(y_k^*,y_j^*) \overset{h<k}{=} 0.$$

Setting this into (2) we obtain $y_k^* = \alpha_{k,k}^* y_k$ for some $0 \neq \alpha_{k,k}^* \in K$ and all $k = 1,2,\ldots,$ which completes the proof.

<u>13. Remark</u>. If $x_0,x_1,\ldots,x_n$ is a finite system of linearly independent elements of an inner product space X then the Schmidt orthogonalization theorem 12. obviously remains true if we take everwhere $k \leq n$.

<u>14. Theorem</u>. <u>Suppose</u>:

1) X <u>is an inner product space</u>.

2) $x_0,x_1,\ldots,x$; $y_0,y_1,\ldots,y \in X$.

3) $x_n \to x$; $y_n \to y$ <u>as</u> $n \to +\infty$ <u>in the standard</u> X-<u>norm</u>.

<u>Then</u> $(x_m,y_n) \to (x,y)$ <u>as</u> $m,n \to +\infty$.

<u>Proof</u>. First

$$(1)\quad \begin{cases} |(x_m,x_n) - (x,x)| = |(x_m,x_n) - (x,y_n) + (x,y_n) - (x,y)| \overset{1.}{=} \\ \overset{1.}{=} |(x_m-x,y_n) + (x,y_n-y)| \leq |(x_m-x,y_n)| + |(x,y_n-y)| \overset{3.}{\leq} \\ \overset{3.}{\leq} \|x_m-x\|\,\|y_n\| + \|x\|\,\|y_n-y\| \quad \text{for all } m,n = 0,1,\ldots \end{cases}$$

Since, by 3). $y_n \to y$ in the standard X-norm as $n \to +\infty$ there exists n_1 such that $\big|\|y_n\| - \|y\|\big| \leq \|y_n-y\| < 1$ for all $n > n_1$ so that

$$(2)\qquad \|y_n\| < 1 + \|y\| \quad \text{for all } n > n_1.$$

By 3), given any $\varepsilon > 0$ there exist m_0, n_2 such that

$$(3)\quad \begin{cases} \|x_m-x\| < \dfrac{1}{1+\|y\|}\,\dfrac{1}{2}\varepsilon \quad \text{for all } m > m_0, \quad \|y_n-y\| < \dfrac{1}{1+\|x\|}\,\dfrac{1}{2}\varepsilon \quad \text{for} \\ \text{all } n > n_2. \end{cases}$$

Hence

$$|(x_m,y_n) - (x,y)| \overset{(1)}{\leq} \|x_m-x\|\,\|y_n\| + \|x\|\,\|y_n-y\| \overset{(2),(3)}{<}$$

$$\overset{(2),(3)}{<} \frac{1}{1+\|y\|}\,\frac{1}{2}\varepsilon\,(1+\|y\|) + \|x\|\,\frac{1}{1+\|x\|}\,\frac{1}{2}\varepsilon < \frac{1}{2}\varepsilon + \frac{1}{2}\varepsilon = \varepsilon$$

for all $m > m_0$, $n > n_0 = \max(n_1,n_2)$.

<u>15. Theorem</u>. <u>Suppose</u>:

1) X <u>is an inner product space</u>.

2) $x \in X$.

3) $0 \neq x_0, x_1, \ldots$ <u>is an orthogonal system in</u> X.

4) $x = \sum_{k=0}^{+\infty} \xi_k x_k$ <u>in the standard</u> X-<u>norm for some</u>

$\xi_0, \xi_1, \ldots \in K$.

<u>Then</u> $\xi_k = \frac{1}{\| x_k \|^2} (x, x_k)$ <u>for</u> $k = 0, 1, \ldots$

<u>Proof</u>. $(x, x_k) \overset{4)}{=} \left(\sum_{j=0}^{+\infty} \xi_j x_j, x_k \right) \overset{14.}{=} \sum_{j=0}^{+\infty} \xi_j (x_j, x_k) \overset{3)}{=}$

$\overset{3)}{=} \xi_k (x_k, x_k) \overset{2.}{=} \xi_k \| x_k \|^2$ for $k = 0, 1, \ldots$. By 3), $\| x_k \|^2 > 0$

for $k = 0, 1, \ldots$ so that dividing both sides of the previous relation by $\| x_k \|^2$ our formula follows.

The preceding theorem leads us to the following definition:

<u>16. Definition</u>. <u>Suppose</u>:

1) X <u>is an inner product space.</u>

2) $x \in X$, $0 \neq x_k \in X$ $(k = 0, 1, \ldots)$.

3) $x_0, x_1, \ldots$ <u>is an orthogonal system in</u> X.

4) $c_k(x) = \frac{1}{\| x_k \|^2} (x, x_k)$ <u>for</u> $k = 0, 1, \ldots$.

<u>Then</u> $c_0(x), c_1(x), \ldots$ <u>are said to be the Fourier coefficients</u>

of x with respect to $x_0, x_1, \ldots$, and $\sum_{k=0}^{+\infty} c_k(x)\, x_k$ is said to be the Fourier series of x with respect to $x_0, x_1, \ldots$. If x has the Fourier series $\sum_{k=0}^{+\infty} c_k(x)\, x_k$ with respect to $x_0, x_1, \ldots$ we write $x \sim \sum_{k=0}^{+\infty} c_k(x)\, x_k$.

17. Remarks. If $x_0, x_1, \ldots$ in 3) is an orthonormal system in X then, by 4), $c_k(x) = (x, x_k)$ for $k = 0, 1, \ldots$. In general, the Fourier series $\sum_{k=0}^{+\infty} c_k(x)\, x_k$ of x with respect to $x_0, x_1, \ldots$ need not be convergent in the standard X-norm, and even if it is convergent in the in the standard X-norm it need not converge to x in the standard X-norm. In other words, $x \sim \sum_{k=0}^{+\infty} c_k(x)\, x_k$ need not imply $x = \sum_{k=0}^{+\infty} c_k(x)\, x_k$ in the standard X-norm.

18. Theorem. Suppose:

1) X is an inner product space.

2) $x \in X$, $0 \neq x_k \in X$ $(k = 0, 1, \ldots)$.

3) $x_0, x_1, \ldots$ is an orthogonal system in X.

4) $c_0(x), c_1(x), \ldots$ are the Fourier coefficients of x with respect to $x_0, x_1, \ldots$.

5) $0 \neq v_0, v_1, \ldots \in K$.

Then the following holds:

I. $\frac{1}{v_0} x_0, \frac{1}{v_1} x_1, \ldots$ is an orthogonal system in X.

II. $v_0 c_0(x), v_1 c_1(x), \ldots$ are the Fourier coefficients of x with respect to the system in I.

Proof I. $\left(\frac{1}{v_j} x_j, \frac{1}{v_j} x_k\right) \overset{1.2}{=} \frac{1}{v_j} \frac{1}{\overline{v}_k} (x_j, x_k) \overset{3)}{=} 0$ for $j,k = 0,1,\ldots;\ j \neq k$.

II. $$\frac{1}{\left\| \frac{x_k}{v_k} \right\|^2} \left(x, \frac{x_k}{v_k}\right) \overset{1.,2.}{=} \frac{|v_k|^2}{\overline{v}_k} \frac{1}{\|x_k\|^2} (x, x_k) =$$

$$= \frac{v_k \overline{v}_k}{\overline{v}_k} \frac{1}{\|x_k\|^2} (x, x_k) = v_k c_k(x) \quad \text{for } k = 0,1,\ldots \ .$$

19. Theorem. Suppose:

1) X is an inner product space.

2) $x \in X,\ 0 \neq x_k \in X \ (k = 0,1,\ldots)$.

3) $x_0, x_1, \ldots$ is an orthogonal system in X.

4) $c_0(x), c_1(x), \ldots$ are the Fourier coefficients of x with respect to $x_0, x_1, \ldots$

5) $x = \sum_{k=0}^{+\infty} \xi_k x_k$ in the standard X-norm for some $\xi_0, \xi_1, \ldots \in K$.

Then $c_k(x) = \xi_k$ for $k = 0,1,\ldots$

Proof. By 15. and 16.

20. Theorem. Suppose:

1) X is an inner product space.

2) $x \in X$, $0 \neq x_k \in X$ $(k = 0,1,\ldots)$.

3) $x_0, x_1, \ldots$ is an orthogonal system in X.

4) $c_0(x), c_1(x), \ldots$ are the Fourier coefficients of x with respect to $x_0, x_1, \ldots$.

5) $x = \sum_{k=0}^{m} \xi_k x_k$ for some $\xi_0, \xi_1, \ldots, \xi_m \in K$, and some non-negative integer m.

Then the following holds:

I. $$c_k(x) = \begin{cases} \xi_k & \text{for } k = 0,1,\ldots,m, \\ 0 & \text{for } k = m, m+1, \ldots \end{cases}$$

II. $$\sum_{k=0}^{n} c_k(x)\, x_k = x \quad \text{for } n = m, m+1, \ldots$$

Proof. I. follows from 19. II. follows from I. and 5).

21. Theorem. Suppose:

1) X is an inner product space.

2) $x \in X$, $0 \neq x_k \in X$ $(k = 0,1,\ldots)$.

3) $x_0, x_1, \ldots$ is an orthogonal system in X.

4) $x = \sum_{k=0}^{m} \xi_k x_k$ for some $\xi_1, \ldots \xi_m \in K$, and some non-negative integer m.

5) $(x,x_k) = 0$ <u>for</u> $k = 0,1,\ldots,m-1$.

Then $x = \xi_m x_m$.

<u>Proof</u> Let $c_0(x), c_1(x),\ldots$ be the Fourier coefficients of x with respect to $x_0,x_1,\ldots$. Then $\xi_k \overset{20.}{=} c_k(x) \overset{16.}{=} \frac{1}{\|x_k\|^2}(x,x_k)$ for $k = 0,1,\ldots,m$ so that, by 5), $\xi_k = 0$ for $k = 0,1,\ldots,m-1$. Setting this into 4) we obtain the result.

<u>22. Bessel's theorem</u>. <u>Suppose</u>:

1) X <u>is an inner product space</u>.

2) $x \in X$, $0 \neq x_k \in X$ $(k = 0,1,\ldots)$.

3) $x_0,x_1,\ldots$ <u>is an orthogonal system in</u> X.

4) $c_0(x), c_1(x),\ldots$ <u>are the Fourier coefficients of</u> x <u>with respect to</u> $x_0,x_1,\ldots$.

<u>Then the following holds</u>:

I. $$0 \leq \|x - \sum_{k=0}^{n} c_k(x)\, x_k\|^2 = \|x\|^2 - \sum_{k=0}^{n} |c_k(x)|^2 \|x_k\|^2$$

<u>for</u> $n = 0,1,\ldots$.

II. $$\sum_{k=0}^{+\infty} |c_k(x)|^2 \|x_k\|^2 \leq \|x\|^2 < +\infty.$$

<u>Proof</u> I. $0 \leq \| x - \sum_{k=0}^{n} c_k(x)\, x_k \|^2 \overset{3.}{=}$

$$\overset{3.}{=} (x - \sum_{j=0}^{n} c_j(x)\, x_j,\ x - \sum_{k=0}^{n} c_k(x)\, x_k) \overset{1.,2.}{=} (x,x) - \sum_{j=0}^{n} c_j(x)(x_j,x) -$$

$$- \sum_{k=0}^{n} \overline{c_k(x)}\, (x,x_k) + \sum_{j,k=0}^{n} c_j(x)\, \overline{c_k(x)}\, \underbrace{(x_j,x_k)}_{\substack{= 0 \text{ for } j \neq k \\ = \| x_k \|^2 \text{ for } j = k}} \overset{1.,3.,3)}{=}$$

$$\overset{1.,3.,3)}{=} \| x \|^2 - \sum_{j=0}^{n} c_j(x)\, \overline{(x,x_j)} - \sum_{k=0}^{n} \overline{c_k(x)}\, (x,x_k) + \sum_{k=0}^{n} |c_k(x)|^2\, \| x_k \|^2 \overset{4),1.16}{=}$$

$$\overset{4),1.16}{=} \| x \|^2 - \sum_{j=0}^{n} c_j(x)\, \overline{c_j(x)}\, \| x_j \|^2 - \sum_{k=0}^{n} \overline{c_k(x)}\, c_k(x)\, \| x_k \|^2 +$$

$$+ \sum_{k=0}^{n} c_k(x)\, \overline{c_k(x)}\, \| x_k \|^2 = \| x \|^2 - \sum_{k=0}^{n} |c_k(x)|^2\, \| x_k \|^2 \quad \text{for} \quad n = 0,1,\ldots \ .$$

II. By I., $\sum_{k=0}^{n} |c_k(x)|^2\, \| x_k \|^2 \leq \| x \|^2 \overset{2)}{<} +\infty$ for $n = 0,1,\ldots$.

Since the left-hand side is a non-decreasing function of n we obtain the result by letting $n \to +\infty$.

23. The Riemann-Lebesgue theorem. Suppose:

1) X is an inner product space.

2) $x \in X$, $0 \neq x_k \in X$ $(k = 0,1,\ldots)$.

3) $x_0, x_1, \ldots$ is an orthogonal system in X.

4) $c_0(x), c_1(x), \ldots$ are the Fourier coefficients of x with respect to $x_0, x_1, \ldots$.

Then $\lim\limits_{k \to +\infty} c_k(x) \| x_k \| = 0$.

Proof. By II. in 22.

24. The Töpler theorem. Suppose:

1) X is an inner product space.

2) $x \in X$, $0 \neq x_k \in X$ $(k = 0,1,\ldots)$.

3) $x_0, x_1, \ldots$ is an orthogonal system in X.

4) $c_0(x), c_1(x), \ldots$ are the Fourier coefficients of x with respect to $x_0, x_1, \ldots$.

5) n is a non-negative integer.

Then the following holds:

I. $$\| x - \sum_{k=0}^{n} \xi_k x_k \|^2 = \| x \|^2 - \sum_{k=0}^{n} |c_k(x)|^2 \| x_k \|^2 + \sum_{k=0}^{n} | c_k(x) - \xi_k |^2 \| x_k \|^2$$ for all $\xi_0, \ldots, \xi_n \in K$.

II. $$\min_{\xi_0,\dots,\xi_n \in K} \| x - \sum_{k=0}^{n} \xi_k x_k \|^2 = \| x - \sum_{k=0}^{n} c_k(x)\, x_k \|^2 \overset{22.}{=}$$

$$\overset{22.}{=} \| x \|^2 - \sum_{k=0}^{n} |c_k(x)|^2 \| x_k \|^2 .$$

<u>Proof.</u> I.

$$\| x - \sum_{k=0}^{n} \xi_k x_k \|^2 \overset{3.}{=} (x - \sum_{j=0}^{n} \xi_j x_j,\ x - \sum_{k=0}^{n} \xi_k x_k) \overset{1.}{=}$$

$$\overset{1.}{=} (x,x) - \sum_{j=0}^{n} \xi_j (x_j,x) - \sum_{k=0}^{n} \bar{\xi}_k (x,x_k) + \sum_{j,k=0}^{n} \xi_j \bar{\xi}_k \underbrace{(x_j,x_k)}_{\substack{= 0 \text{ for } j \neq k \\ = \| x_k \|^2 \text{ for } j = k}} \overset{1.,2.3.}{=}$$

$$\overset{1.,2.,3.}{=} \| x \|^2 - \sum_{k=0}^{n} \xi_k \overline{(x,x_k)} - \sum_{k=0}^{n} \bar{\xi}_k (x,x_k) + \sum_{k=0}^{n} \xi_k \bar{\xi}_k \| x_k \|^2 \overset{4),1.16}{=}$$

$$\overset{4).1.16}{=} \| x \|^2 - \sum_{k=0}^{n} \xi_k \overline{c_k(x)} \| x_k \|^2 - \sum_{k=0}^{n} \bar{\xi}_k c_k(x) \| x_k \|^2 + \sum_{k=0}^{n} \xi_k \bar{\xi}_k \| x_k \|^2$$

$$= \| x \|^2 + \sum_{k=0}^{n} \left[c_k(x) \overline{c_k(x)} - \xi_k \overline{c_k(x)} - \bar{\xi}_k c_k(x) + \xi_k \bar{\xi}_k \right] \| x_k \|^2 -$$

$$- \sum_{k=0}^{n} c_k(x) \overline{c_k(x)} \| x_k \|^2 = \| x \|^2 + \sum_{k=0}^{n} \left[c_k(x) - \xi_k \right] \left[\overline{c_k(x)} - \bar{\xi}_k \right] \| x_k \|^2 -$$

$$- \sum_{k=0}^{n} c_k(x) \overline{c_k(x)} \| x_k \|^2 = \| x \|^2 - \sum_{k=0}^{n} |c_k(x)|^2 \| x_k \|^2 + \sum_{k=0}^{n} |c_k(x) - \xi_k|^2 \| x_k \|$$

for all $\xi_0,\dots,\xi_n \in K$.

II. On the right-hand side of I., only the last term depends on $\xi_0, \ldots, \xi_n$. Consequently if $\xi_0, \ldots, \xi_n$ run through K then the expression in I. is minimal if and only if the last term on the right-hand side is minimal, i.e. if and only if $\xi_k = c_k(x)$ $(k = 0,1,\ldots,n)$. Hence, by I. in 22. the result follows.

25. Definition. Suppose:

1) X is an inner product space.

2) $x_0, x_1, \ldots$ is an orthogonal system in X.

3) For each $x \in X$, the conditions $(x, x_k) = 0$ for $k = 0,1,\ldots$ imply $x = 0$.

Then the orthogonal system $x_0, x_1, \ldots$ is said to be maximal.

26. Theorem. Suppose:

1) X is an inner product space.

2) $x_0, x_1, \ldots$ is a maximal orthogonal system in X.

3) For some $x, y \in X$ we have $(x, x_k) = (y, x_k)$ for all $k = 0,1,\ldots$.

Then $x = y$.

Proof. By 1) and 3), $y - x \in X$, $(y-x, x_k) = 0$ for all $k = 0,1,\ldots$. Hence, by 2), $y - x = 0$, i.e. $x = y$.

27. Definition. Suppose:

1) X is an inner product space.

2) $x_0, x_1, \ldots$ is an orthogonal system in X.

3) Given any $x \in X$, $\varepsilon \in (0, +\infty)$ there exists a non-negative integer n and $\xi_0, \ldots, \xi_n \in K$ such that $\| x - \sum_{k=0}^{n} \xi_k x_k \| < \varepsilon$.

Then the orthogonal system $x_0, x_1, \ldots$ is said to be closed in the standard X-norm.

28. Remark. Everything in this chapter holds with appropriate changes also for an inner product space over the real field E_1, and the proofs are analogous.

29. Remark. All results in this chapter are well-known, and may be found in many textbooks concerning the linear algebra of functional analysis. The Schmidt orthogonalization theorem in 12. has been formulated as completely as possible. For this purpose some results from Natanson (12) vol. 2., p. 32.-36., have been utilized. These results enable us not only to prove the existence of the orthogonal system but also to construct it explicitly.

§ 2. Hilbert spaces

1. Definition. Suppose:

1) X is an inner product space.

2) $\| x \|$ is the standard X-norm of any $x \in X$, i.e. $\| x \| = (x,x)^{\frac{1}{2}}$ for any $x \in X$.

3) X is complete in the standard X-norm, i.e. every Cauchy sequence in X in the standard X-norm is convergent to some element of X in the standard X-norm.

Then X is a Hilbert space.

2. Theorem. Suppose:

1) X is a Hilbert space.

2) $x \in X$, $0 \neq x_k \in X$ $(k = 0,1,\ldots)$.

3) $x_0, x_1, \ldots$ is an orthogonal system in X.

4) $c_0(x)$, $c_1(x), \ldots$ are the Fourier coefficients of x with respect to $x_0, x_1, \ldots$.

The the following holds:

I. $\sum_{k=0}^{+\infty} c_k(x)\, x_k$ converges in the standard X-norm.

II. $\sum_{k=0}^{+\infty} c_k(x)\, x_k$, converges unconditionally in the standard

X-norm, i.e. neither its convergence nor its sum in the standard X-norm depend on rearrangement of the elements $x_0, x_1, \dots$.

III. $$0 \le \Big\| x - \sum_{k=0}^{+\infty} c_k(x)\, x_k \Big\|^2 = \|x\|^2 - \sum_{k=0}^{+\infty} |c_k(x)|^2 \, \|x_k\|^2 .$$

IV. $$\Big(x - \sum_{k=0}^{+\infty} c_k(x)\, x_k,\ x_n\Big) = 0 \quad \text{for all} \quad n = 0,1,\dots .$$

Proof I. By the Bessel theorem 1.22,

(1) $$\sum_{k=0}^{+\infty} |c_k(x)|^2 \, \|x_k\|^2 \le \|x\|^2 < +\infty .$$

Consequently given any $\varepsilon \in (0,+\infty)$ there exists n_0 such that

(2) $$\begin{cases} \Big\| \sum_{k=m}^{n} c_k(x)\, x_k \Big\|^2 \overset{1.3}{=} \Big(\sum_{j=m}^{n} c_j(x)\, x_j,\ \sum_{k=m}^{n} c_k(x)\, x_k \Big) \overset{1.1,1.2}{=} \\ \overset{1.1,1.2}{=} \sum_{j,k=m}^{n} c_j(x)\, \overline{c_k(x)}\, \underbrace{(x_j, x_k)}_{\substack{= 0 \text{ for } j \ne k \\ = \|x_k\|^2 \text{ for } j=k}} = \sum_{k=m}^{n} |c_k(x)|^2 \, \|x_k\|^2 \overset{(1)}{<} \\ \overset{(1)}{<} \varepsilon \text{ for all } n_0 \le m \le n. \end{cases}$$

Since, by 1) and 1., X is complete in the standard X-norm it follows from

(2) that $\sum_{k=0}^{+\infty} c_k(x)\, x_k$ converges in the standard X-norm.

II. Let $x'_0, x'_1, \ldots$ be another rearrangement of the elements $x_0, x_1 \ldots$, and $c'_0(x), c'_1(x), \ldots$ be the Fourier coefficients of x with respect to $x'_0, x'_1, \ldots$. Then by I., both $\sum_{k=0}^{+\infty} c_k(x)\, x_k$ and $\sum_{k=0}^{+\infty} c'_k(x)\, x'_k$ converge in the standard X-norm. By the Bessel theorem 1.22, also both

$\sum_{k=0}^{+\infty} |c_k(x)|^2 \, \|x_k\|^2$ and $\sum_{k=0}^{+\infty} |c'_k(x)|^2 \, \|x'_k\|^2$ converge. Hence

$$\Big\| \sum_{k=0}^{+\infty} c_k(x)\, x_k - \sum_{k=0}^{+\infty} c'_k(x)\, x'_k \Big\|^2 \overset{1.3}{=}$$

$$\overset{1.3}{=} \Big(\sum_{j=0}^{+\infty} c_j(x) x_j - \sum_{j=0}^{+\infty} c'_j(x) x'_j, \sum_{k=0}^{+\infty} c_k(x) x_k - \sum_{k=0}^{+\infty} c'_k(x) x'_k \Big) \overset{1.1,1.2,1.14}{=}$$

$$\overset{1.1,1.2,1.14}{=} \sum_{j,k=0}^{+\infty} c_j(x)\, \overline{c_k(x)}\, \underbrace{(x_j, x_k)}_{\substack{=0 \text{ for } j\neq k \\ = \|x_k\|^2 \text{ for } j=k}} - \sum_{j,k=0}^{+\infty} c'_j(x)\, \overline{c_k(x)}\, \underbrace{(x'_j, x_k)}_{\substack{=0 \text{ for } x'_j \neq x_k \\ = \|x_k\|^2 \text{ for } x'_j = x_k}}$$

$$- \sum_{j,k=0}^{+\infty} c_j(x)\, \overline{c'_k(x)}\, \underbrace{(x_j, x'_k)}_{\substack{=0 \text{ for } x'_k \neq x_j \\ = \|x_j\|^2 \text{ for } x'_k = x_j}} + \sum_{j,k=0}^{+\infty} c'_j(x)\, \overline{c'_k(x)}\, \underbrace{(x'_j, x'_k)}_{\substack{=0 \text{ for } j \neq k \\ = \|x'_k\|^2 \text{ for } j = k}}$$

$$= \sum_{k=0}^{+\infty} |c_k(x)|^2 \, \|x_k\|^2 - \sum_{k=0}^{+\infty} |c_k(x)|^2 \, \|x_k\|^2 - \sum_{j=0}^{+\infty} |c_j(x)|^2 \, \|x_j\|^2 + \sum_{k=0}^{+\infty} |c'_k(x)|^2 \, \|x'_k\|^2$$

$$= \sum_{k=0}^{+\infty} |c_k(x)|^2 \|x_k\|^2 - \sum_{k=0}^{+\infty} |c_k(x)|^2 \|x_k\|^2 - \sum_{k=0}^{+\infty} |c_k(x)|^2 \|x_k\|^2 + \sum_{k=0}^{+\infty} |c_k(x)|^2 \|x_k\|^2$$

$$= 0 \quad \text{so that} \quad \sum_{k=0}^{+\infty} c_k(x)x_k = \sum_{k=0}^{+\infty} c'_k(x)x'_k.$$

II. In view of I. and 1.14 we may proceed as in the proof of I. in 1.22 with the only difference that we write $+\infty$ instead of n in every sum.

IV. $$(x - \sum_{k=0}^{+\infty} c_k(x)x_k, x_n) \overset{1.1,1.14}{=} (x,x_n) - \sum_{k=0}^{+\infty} c_k(x)\underbrace{(x_k,x_n)}_{\substack{=0 \text{ for } k\neq n \\ = \|x_n\|^2 \text{ for } k=n}} =$$

$$= (x,x_n) - c_n(x) \|x_n\|^2 \overset{1.16}{=} 0 \quad \text{for} \quad n = 0,1,\dots \quad .$$

<u>3. Remark</u>. <u>Suppose 1) - 4) as in 2. Then, in general, the Fourier series</u> $\sum_{k=0}^{+\infty} c_k(x)\, x_k$ <u>of</u> x <u>with respect to</u> $x_0, x_1, \dots$ <u>need not converge to</u> x <u>in the standard</u> X-<u>norm, and its unconditional convergence in the standard</u> X-<u>norm does not imply its absolute convergence. But the following theorem holds.</u>

<u>4. Theorem</u>. <u>Suppose</u>:

1) X <u>is a Hilbert space</u>.

2) $0 \neq x_k \in X \quad (k = 0,1,\dots)$.

3) $x_0, x_1, \ldots$ <u>is an orthogonal system in</u> X.

4) $c_0(x), c_1(x), \ldots$ <u>are the Fourier coefficients of any</u> $x \in X$ <u>with respect to</u> $x_0, x_1, \ldots$.

<u>Then the following conditions are equivalent</u>:

I. $x = \sum_{k=0}^{+\infty} c_k(x)\, x_k$ <u>for each</u> $x \in X$ <u>in the standard</u> X-<u>norm</u>

II. $\| x \|^2 = \sum_{k=0}^{+\infty} | c_k(x) |^2 \, \| x_k \|^2$ <u>for each</u> $x \in X$ (<u>the Parseval equality</u>).

III. $(x,y) = \sum_{k=0}^{+\infty} c_k(x)\, \overline{c_k(y)}\, \| x_k \|^2$ <u>for each</u> $x, y \in X$ (<u>the generalized Parseval equality</u>).

IV. $x_0, x_1, \ldots$ <u>is maximal</u> (see 1.25).

V. $x_0, x_1, \ldots$ <u>is closed in the standard</u> X-<u>norm</u> (see 1.27).

<u>Proof</u>. By III. in 2.

(1) I. $\Longleftrightarrow$ II.

Consequently

$$\text{II.} \overset{(1)}{\Longrightarrow} \text{I.} \qquad (x,y) \overset{\text{I.}}{=} \Big(\sum_{j=0}^{+\infty} c_j(x)\, x_j, \sum_{k=0}^{+\infty} c_k(y)\, x_k \Big) \overset{1.1,1.14}{=}$$

$$\overset{1.1,1.14}{=} \sum_{j,k=0}^{+\infty} c_j(x)\, \overline{c_k(y)}\, \underbrace{(x_j, x_k)}_{\substack{=0 \text{ for } j \neq k \\ = \| x_k \|^2 \text{ for } j=k}} = \sum_{k=0}^{+\infty} c_k(x)\, \overline{c_k(y)}\, \| x_k \|^2 \quad \text{for all}$$

$$x, y \in X \Longrightarrow \text{III.} \overset{\text{if } y=x}{\Longrightarrow} \text{II.}$$

so that

(2) $$\text{II.} \iff \text{III.}$$

Let I. hold. Next let $(x, x_k) = 0$ for $k = 0,1,\ldots$. Then, by 1.16, $c_k(x) = 0$ for $k = 0,1,\ldots$. Setting this into I. we obtain $x = 0$ so that, by 1.25, $x_0, x_1, \ldots$ is maximal, i.e. IV. holds. Conversely let IV. hold, i.e. let $x_0, x_1, \ldots$ be maximal. Since, by IV. in 2., $(x - \sum_{k=0}^{+\infty} c_k(x)\, x_k,\ x_n) = 0$ for all $n = 0,1,\ldots$ the maximality of $x_0, x_1, \ldots$ implies, by 1.25, the relation $x - \sum_{k=0}^{+\infty} c_k(x)\, x_k = 0$, i.e. $x = \sum_{k=0}^{+\infty} c_k(x)\, x_k$ in the standard X-norm, so that I. holds. Hence

(3) $$\text{I.} \iff \text{IV.}$$

Again let I. hold. Then fixing any $x \in X$, $\varepsilon \in (0, +\infty)$, there exists n_0 such that $\| x - \sum_{k=1}^{n} c_k(x)\, x_k \| < \varepsilon$ for all $n \geq n_0$ so that, by 1.27, $x_0, x_1, \ldots$ is closed in the standard X-norm. Hence

(4) $$\text{I.} \Rightarrow \text{V.}$$

Finally let V. hold, i.e. for any $x \in X$, $\varepsilon \in (0, +\infty)$ fixed there exist $\xi_0, \ldots, \xi_n \in K$ such that

(5) $$\| x - \sum_{k=0}^{n} \xi_k\, x_k \| < \sqrt{\varepsilon}\ .$$

Hence, by I. in 2. and the Töpler theorem 1.24,

$$0 \overset{\text{I. in 2.}}{\leq} \|x\|^2 - \sum_{k=0}^{+\infty} |c_k(x)|^2 \|x_k\|^2 \leq \|x\|^2 - \sum_{k=0}^{n} |c_k(x)|^2 \|x_k\|^2 \leq$$

$$\leq \|x\|^2 - \sum_{k=0}^{n} |c_k(x)|^2 \|x_k\|^2 + \sum_{k=0}^{n} |c_k(x) - \xi_k|^2 \|x_k\|^2 \overset{1.24}{=} \|x - \sum_{k=0}^{n} \xi_k x_k\|^2 \overset{(5)}{<} \varepsilon$$

Since $\varepsilon \in (0, +\infty)$ may be arbitrarily small $\|x\|^2 = \sum_{k=0}^{+\infty} |c_k(x)|^2 \|x_k\|^2$

follows. Since $x \in X$ is arbitrary II. holds so that, by (1), also I. holds. Hence V. $\Rightarrow$ I. so that, by (4),

(6) $\qquad$ I. $\Leftrightarrow$ V.,

which completes the proof.

<u>5. The Riesz-Fischer theorem</u>. <u>Suppose</u>:

1) $\quad$ X <u>is a Hilbert space</u>.

2) $\quad$ $0 \neq x_k \in X \quad (k = 0,1,\ldots)$.

3) $\quad$ $x_0, x_1, \ldots$ <u>is an orthogonal system in</u> X.

4) $\quad$ $c_0, c_1, \ldots$ <u>are complex numbers such that</u> $\sum_{k=0}^{+\infty} |c_k|^2 \|x_k\|^2 < +\infty$

5) $\quad$ $s_n = \sum_{k=0}^{n} c_k x_k$ <u>for all</u> $n = 0,1,\ldots$.

<u>Then the following holds</u>:

I. $\quad$ $s_0, s_1, \ldots$ <u>is a Cauchy sequence in</u> X <u>in the standard</u> X-<u>norm so that</u>, <u>by</u> 1) <u>and</u> 1., <u>there exists</u> $x \in X$ <u>such that</u>

$$x = \lim_{n \to +\infty} s_n = \sum_{k=0}^{+\infty} c_k x_k \quad \underline{\text{in the standard}} \quad X\text{-}\underline{\text{norm}}.$$

II. $c_0, c_1, \ldots$ <u>are the Fourier coefficients of</u> x <u>with respect to</u> $x_0, x_1, \ldots$ <u>so that, by</u> 1.16, $x \sim \sum_{k=0}^{+\infty} c_k x_k$.

III. $$\| x \|^2 = \sum_{k=0}^{+\infty} | c_k |^2 \, \| x_k \|^2.$$

<u>Proof</u>. I. If $m, n = 0, 1, \ldots$ and $n > m$ then

$$\| s_n - s_m \|^2 = (s_n - s_m, s_n - s_m) \overset{5)}{=} \Big(\sum_{k=m+1}^{n} c_h x_h, \sum_{k=m+1}^{n} c_k x_k \Big) \overset{1.1, 1.2}{=} \sum_{h,k=m+1}^{n} c_h \overline{c_k} \, (x_h, x$$

$$\overset{3)}{=} \sum_{k=m+1}^{n} | c_k |^2 \, (x_k, x_k) \overset{1.3}{=} \sum_{k=m+1}^{n} | c_k |^2 \, \| x_k \|^2.$$

By 4), given any $\varepsilon \in (0, +\infty)$ there exists n_0 such that the right-hand side is $< \varepsilon$ for all $n > m \geq n_0$. Consequently $s_0, s_1, \ldots$ is a Cauchy sequence in X in the standard X-norm so that, by 1) and 1., there exists $x \in X$ such that $x = \lim_{n \to +\infty} s_n = \sum_{k=0}^{+\infty} c_k x_k$ in the standard X-norm.

II. This follows from I. by 1.15 and 1.16.

III. By 5), II. and III. in 2.,

$$\| x - s_n \|^2 \overset{5)}{=} \| x - \sum_{k=0}^{n} c_k x_k \|^2 \overset{\text{II.;III.in2.}}{=} \| x \|^2 - \sum_{k=0}^{n} | c_k |^2 \, \| x_k \|^2$$

for $n = 0,1,\ldots$.

Since, by I., the left-hand side tends to zero as $n \to +\infty$ the last formula follows.

6. Remark. Everything in this chapter holds with the appropriate changes also for a Hilbert space over the real field, and the proofs are analogous.

7. Remark. All the results in this chapter are well known, and may be found in many textbooks on functional analysis. The nice formulation of the theorem in 4. emphasizing the equivalence of the conditions I.-V. in a Hilbert space is due to my teacher, Professor T. Husain of McMaster University.

§ 3. The L_w^p (I)-spaces

1. Remark. Everywhere in this thesis except the last chapter, measure or integral are to be interpreted as Lebesgue measure of Lebesgue integral respectively. Knowledge of the spaces $L^p(I)$, where $1 \leq p < +\infty$ and I is a non-empty subinterval of $(-\infty, +\infty)$, is assumed.

2. Definition. Suppose:

1) I is a non-empty subinterval of $(-\infty, +\infty)$

2) $0 < w(t) < +\infty$ a.e. on I.

3) w = measurable on I.

Then w is said to be a weight function on I.

3. Definition. Suppose:

1) - 3) as in 2.

4) $1 \leq p < +\infty$.

Then L_w^p (I) is the set of all measurable functions on I considered equal if they are equal a.e. on I, and such that $\int_I |f|^p \, w \, dt < +\infty$.

4. The Hölder inequality. Suppose:

1) - 3) as in 2.

4) $p \in (1, +\infty)$, $\frac{1}{p} + \frac{1}{2} = 1$ (so that $y = \frac{p}{p-1} \in (1, +\infty)$).

5) $f \in L_w^p$ (I), $g \in L_w^q$ (I).

Then $\int_I |fg|\, w\, dt \leq \left(\int_I |f|^p\, w\, dt\right)^{\frac{1}{p}} \left(\int_I |g|^q\, w\, dt\right)^{\frac{1}{q}}$.

Proof. This follows from the Hölder inequality for $F \in L^p(I)$, $G \in L^q(I)$ by setting $F = f\, w^{\frac{1}{p}}$; $G = g\, w^{\frac{1}{q}}$.

5. The Minkowski inequality. Suppose:

1) - 3) as in 2.

4) $1 \leq p < +\infty$.

5) $f, g \in L^p_w(I)$.

Then $\left(\int_I |f+g|^p\, w\, dt\right)^{\frac{1}{p}} \left(\int_I |f|^p\, w\, dt\right)^{\frac{1}{p}} + \left(\int_I |g|^p\, w\, dt\right)^{\frac{1}{p}}$.

Proof. This follows from the Minkowski inequality for $F, G \in L^p(I)$ by setting $F = f\, w^{\frac{1}{p}}$, $G = g\, w^{\frac{1}{p}}$.

6. Theorem. Suppose:

1) - 3) as in 2.

4) $1 \leq p < +\infty$.

Then $L^p_w(I)$ is a normed linear space with the norm

$$\|f\|_{L^p_w(I)} = \left(\int_I |f|^p\, w\, dt\right)^{\frac{1}{p}} \text{ for all } f \in L^p_w(I).$$

Proof. Additivity and the triangle inequality follow from 5., and everything else is easy to verify.

7. Theorem. Suppose:

1) - 3) as in 2.

4) $1 \leq p < +\infty$.

Then the space $L_w^p(I)$ is complete.

Proof. Let $f_1, f_2, \ldots$ be a Cauchy sequence in $L_w^p(I)$. Then $f_1 w^{\frac{1}{p}}, f_2 w^{\frac{1}{p}}, \ldots$ is a Cauchy sequence in $L^p(I)$. Since $L^p(I)$ is complete there exists $F \in L^p(I)$ such that $\lim\limits_{n \to +\infty} f_n w^{\frac{1}{p}} = F$ in the $L^p(I)$-norm.

Let us set $f = \dfrac{F}{w^{\frac{1}{p}}}$. Then f is measurable on I, and $\int_I |f|^p w \, dt =$

$= \int_I |F|^p \, dt < +\infty$, so that $f \in L_w^p(I)$. Next $\lim\limits_{n \to +\infty} f_n w^{\frac{1}{p}} = F = \dfrac{F}{w^{\frac{1}{p}}} w^{\frac{1}{p}} = f w^{\frac{1}{p}}$

in the $L^p(I)$-norm so that $\lim\limits_{n \to +\infty} f_n = f$ in the $L_w^p(I)$-norm. Therefore $L_w^p(I)$ is complete.

8. Theorem. Suppose:

1) I is a non-empty subinterval of $(-\infty, +\infty)$.

2) $0 < w(t) < +\infty$ a.e. on I.

3) $\int_I w \, dt < +\infty$. (Consequently w is a weight function on I.)

4) $1 \leq p_1 < p_2 < +\infty$.

Then $L_w^{p_2}(I) \subset L_w^{p_1}(I)$.

Proof. Let $f \in L_w^{p_2}(I)$. By 3.,

(1) $$f = \text{measurable on } I, \quad \int_I |f|^{p_2} w\, dt < +\infty.$$

By 4), $1 < \frac{p_2}{p_1} < +\infty$. Let $\frac{p_2}{p_1} = p$, $\frac{1}{p} + \frac{1}{q} = 1$, so that $p_1 p = p_2$, $\frac{1}{p} = \frac{p_1}{p_2}$,

$\frac{1}{q} = 1 - \frac{1}{p} = 1 - \frac{p_1}{p_2} = \frac{p_2 - p_1}{p_2}$. Thus

$$\int_I |f|^{p_1} w\, dt = \int_I |f|^{p_1} . 1 .\, w\, dt \overset{4.}{\leq} \left[\int_I (|f|^{p_1})^p w\, dt\right]^{\frac{1}{p}} \left(\int_I 1^q w\, dt\right)^{\frac{1}{q}}$$

$$= \left(\int_I |f|^{p_2} w\, dt\right)^{\frac{p_1}{p_2}} \left(\int_I w\, dt\right)^{\frac{p_2 - p_1}{p_2}} \overset{(1),3)}{<} +\infty$$

so that $f \in L_w^{p_1}(I)$.

9. Theorem. Suppose:

1) I is a non-empty subinterval of $(-\infty, +\infty)$.

2) $0 < w(t) < +\infty$ a.e. on I.

3) w = measurable on I.

4) $(f,g) = \int_I f \bar{g}\, w\, dt$ for all $f, g \in L_w^2(I)$.

Then the following holds:

I. $L_w^2(I)$ is an inner product space.

II. $\|f\|_{L^2_w(I)} = \left(\int_I |f|^2 w\, dt\right)^{\frac{1}{2}}$ <u>for all</u> $f \in L^2_w(I)$ <u>is</u>

<u>the standard norm in</u> $L^2_w(I)$, <u>i.e.</u> $\|f\|_{L^2_w(I)} = (f,f)^{\frac{1}{2}}$ <u>for all</u> $f \in L^2_w(I)$.

III. $L^2_w(I)$ = <u>a Hilbert space</u>.

<u>Proof</u> I. It is easy to verify that the inner product space as defined in 4) satisfies all axioms in 1.1.

II. $\|f\|_{L^2_w(I)} = \left(\int_I |f|^2 w\, dt\right)^{\frac{1}{2}} = \left(\int_I f\bar{f}\, w\, dt\right)^{\frac{1}{2}} \overset{4)}{=} (f,f)^{\frac{1}{2}}$

for all $f \in L^2_w(I)$.

III. Follows from I., 7. and 2.1.

<u>10. Remark.</u> From I. in 9., and from 1.3. we have again the theorems in 4., 5. and 6. for $p = q = 2$.

<u>11. Definition.</u> <u>Suppose</u>:

1) - 4) <u>as in</u> 9.

(Consequently, by 9., (f,g) is an inner product in $L^2_w(I)$, and $L^2_w(I)$ is a Hilbert space).

5) $f_0, f_1, \ldots$ <u>is an orthogonal (or orthonormal) system in</u> $L^2_w(I)$.

<u>Then</u> $f_0, f_1, \ldots$ <u>are said to form an orthogonal</u> (<u>or orthonormal</u>) <u>system on</u> I <u>with respect to the weight function</u> w.

<u>12. Remark</u> <u>If</u> $w(t) = 1$ <u>a.e. on</u> I <u>then</u> $L^p_w(I)$ <u>obviously coincides with</u> $L^p(I)$ <u>so that the symbol</u> w <u>in</u> $L^p_w(I)$ <u>may be omitted</u>.

<u>Similarly if</u> $p = 1$ <u>we usually omit the symbol</u> p <u>in</u> $L_w^p(I)$.

<u>Instead of</u> $\| f \|_{L_w^p(I)}$ <u>we shall often write</u> $\| f \|_p$ <u>only</u>.

§ 4. Some dense subsets of $L_w^p(I)$

1. Theorem. Suppose:

1) $I = [a,b]$, where $-\infty < a < b < +\infty$.

2) $0 < w(t) < +\infty$ a.e. on I.

3) $\int_I w\,dt < +\infty$.

4) $1 \leq p < +\infty$.

Then the following subsets of $L_w^p(I)$ are dense in $L_w^p(I)$ in the $L_w^p(I)$-norm:

I. The set of all bounded measurable functions on I.

II. The set of all continuous functions on I.

III. The set of all continuous functions on I with period $b-a$.

IV. The set of all polynomials on I.

V. If $b-a = 2\pi$ the set of all trigonometric polynomials on I.

Proof. Let $f \in L_w^p(I)$ so that

(1) $$\int_I |f|^p\, w\,dt < +\infty.$$

By (1) and 2), f = finite a.e. on I so that, without any loss of generality, we may suppose that

(2) $$|f(t)| < +\infty \quad \text{on } I.$$

Next let $\varepsilon \in (0, +\infty)$.

I. In view of (1) and the absolute continuity of the Lebesgue integral there exists $\delta \in (0, +\infty)$ such that

(3) $$E \subset I, \ \mu(E) < \delta, \quad \int_E |f|^p w \, dt < \left(\frac{1}{4}\right)^p.$$

Set

(4) $$E_k = \{ t \in I; \ |f(t)| > k \} \ (k = 1,2,\ldots).$$

Obviously

(5) $$[a,b] \overset{1)}{=} I \overset{(4)}{\supset} E_1 \overset{(4)}{\supset} E_2 \supset \ldots,$$

(6) $$\lim_{k \to +\infty} E_k \overset{(5)}{=} \bigcap_{k=1}^{+\infty} E_k \overset{(2)}{=} \Theta ,$$

(7) $$\mu(E_k) \leq \mu(I) = b-a \overset{1)}{<} +\infty.$$

By (5),(6),(7) and theorem E. in Halmos ( ), p. 33.,

(8) $$\lim_{k \to +\infty} \mu(E_k) \overset{(5)-(7)-\text{Halmos}}{=} \mu\left(\lim_{k \to +\infty} E_k\right) \overset{(6)}{=} \mu(\Theta) = 0.$$

By (8), there exists a natural number n such that

(9) $$\mu(E_n) < \delta.$$

Set

(10) $$f_1(t) = \begin{cases} f(t) & \text{for all } t \in I - E_n \\ 0 & \text{for all } t \in E_n. \end{cases}$$

By (10) and (4),

(11) $$|f_1(t)| \leq \min(|f(t)|, n) \quad \text{for all} \quad t \in I,$$

so that f_1 is a bounded measurable function on I. Next

(12) $$\int_I |f-f_1|^p w\,dt = \int_{I-E_n} |f-f_1|^p w\,dt + \int_{E_n} |f-f_1|^p w\,dt \overset{(10)}{=} \int_{E_n} |f|^p w\,dt \overset{(9)(3)}{<} (\tfrac{1}{4}\varepsilon$$

so that

$$\|f-f_1\|_p = \left(\int_I |f-f_1|^p w\,dt\right)^{\frac{1}{p}} \overset{(12)}{<} \tfrac{1}{4}\varepsilon < \varepsilon ,$$

which proves I.

II. Let n be the natural number in (9). In view of 3) and the absolute continuity of the Lebesgue integral there exists $\delta_1 \in (0, b-a)$ such that

(13) $$E \subset I,\ \mu(E) < \delta_1 \Rightarrow 2^p n^p \int_E w\,dt < (\tfrac{1}{4}\varepsilon)^p.$$

Let f_1 be the bounded measurable function on I from the proof of I. By the Luzin theorem, there exists a set G such that

(14) $$G = \text{open},\ \mu(G) < \delta_1,\ f_1 = \text{continuous on } I-G.$$

By (14), $I-G = [a,b] - G$ is a closed subset of I. Consequently, by (14), (11) and the Uryson theorem concerning continuous extensions, there exists a function f_2 such that

(15) $$f_2 = \text{continuous on } I,$$

(16) $f_1(t) = f_2(t)$ for all $t \in I-G$.

(17) $|f_2(t)| \leq n$ for all $t \in I$.

Hence

$$\int_I |f_1-f_2|^p \; w \; dt = \int_{I-G} |f_1-f_2|^p \, w \, dt + \int_{I\cap G} |f_1-f_2|^p \, w \, dt \overset{(16)}{=}$$

$$\overset{(16)}{=} \int_{I\cap G} |f_1-f_2|^p \, w \, dt \overset{(11),(17)}{\leq} 2^p n^p \int_{I\cap G} w \, dt \leq 2^p n^p \int_G w \, dt <$$

$$\overset{(14),(13)}{<} \left(\tfrac{1}{4}\varepsilon\right)^p$$

so that

(19) $$\| f-f_2 \|_p \overset{\text{Minkowski}}{\leq} \| f-f_1 \|_p + \| f_1-f_2 \|_p \overset{(12),(18)}{<} \tfrac{1}{4}\varepsilon + \tfrac{1}{4}\varepsilon < \varepsilon,$$

which proves II.

III. Let n be the natural number from the proof of I., and f_2 the continuous function on I from the proof of II. By (13), there exists $\delta_1 \in (0, b-a)$ such that

(20) $$2^p n^p \int_{b-\delta_1}^{b} w \, dt < \left(\tfrac{1}{4}\varepsilon\right)^p.$$

By (17) and (19)

(17) $|f_2(t)| \leq n$ for all $t \in I$,

(19) $\| f-f_2 \|_p < \frac{1}{2}\varepsilon$.

Define the function f_3 by

(21) $$f_3(t) = f_2(t) \quad \text{for all} \quad t \in [a,\ b-\delta_1],$$

(22) $$f_3(b) = f_3(a) \overset{(21)}{=} f_2(a),$$

(23) $$f_3 = \text{linear in } [b-\delta_1, b],$$

so that f_3 is a continuous function on I with period $b-a$. From the preceding definition and (17) it follows that

(24) $$|f_3(t)| \leq n \quad \text{for all} \quad t \in I.$$

Hence,

(25) $$\begin{cases} \displaystyle\int_I |f_2-f_3|^p\, w\, dt = \int_a^{b-\delta_1} |f_2-f_3|^p\, w\, dt + \int_{b-\delta_1}^{b} |f_2-f_3|^p\, w\, dt \overset{(21)}{=} \\ \displaystyle \overset{(21)}{=} \int_{b-\delta_1}^{b} |f_2-f_3|^p\, w\, dt \leq \int_{b-\delta_1}^{b} (|f_1| + |f_2|)^p\, w\, dt \overset{(17),(24)}{\leq} \\ \displaystyle \overset{(17),(24)}{\leq} 2^p\, n^p \int_{b-\delta_1}^{b} w\, dt \overset{(20)}{<} \left(\frac{1}{4}\right)^p \end{cases}$$

so that

(26) $$\begin{cases} \|f-f_3\|_p \overset{\text{Minkowski}}{\leq} \|f-f_2\|_p + \|f_2-f_3\|_p \overset{(19),(25)}{<} \\ \overset{(19),(25)}{<} \frac{1}{2}\varepsilon + \frac{1}{4}\varepsilon = \frac{3}{4}\varepsilon < \varepsilon, \end{cases}$$

which proves III.

IV. Let f_2 be the continuous function on I in the proof of II. By the first Weierstrass theorem and 4), there exists a polynomial f_4 on I such that

$$(27) \qquad \int_I |f_2-f_4|^p \, w \, dt \le \max_{t \in I} |f_2(t)-f_4(t)|^p \int_I w \, dt \overset{\text{Weierstrass, 4)}}{\le} (\tfrac{1}{2}\varepsilon)^p.$$

Hence

$$\|f-f_4\|_p \overset{\text{Minkowski}}{\le} \|f-f_2\|_p + \|f_2-f_4\|_p \overset{(19),(27)}{<} \tfrac{1}{2}\varepsilon + \tfrac{1}{2}\varepsilon = \varepsilon,$$

which proves IV.

V. Let $b-a = 2\pi$, and let f_3 be the continuous function on I with period $b-a = 2\pi$ in the proof of III. By the second Weierstrass theorem and 3), there exists a trigonometric polynomial f_5 on I such that

$$(28) \qquad \int_I |f_3-f_5|^p \, w \, dt \le \max_{t \in I} |f_3(t)-f_5(t)|^p \int_I w \, dt \overset{\text{Weierstrass, 3)}}{<} (\tfrac{1}{4}\varepsilon)^p.$$

Hence

$$(29) \qquad \|f-f_5\|_p \overset{\text{Minkowski}}{\le} \|f-f_3\|_p + \|f_3-f_5\|_p \overset{(26),(28)}{<} \tfrac{3}{4}\varepsilon + \tfrac{1}{4}\varepsilon = \varepsilon,$$

which proves V.

<u>2. Theorem</u>. <u>Suppose</u> :

1) I <u>is a non-empty, unbounded subinterval of</u> $(-\infty, +\infty)$.

2) $0 < w(t) < +\infty$ <u>a.e. on</u> I.

3) $\int_I w \, dt \quad +\infty$.

4) $1 \le p < +\infty$.

Then the following subsets of $L_w^p(I)$ are dense in $L_w^p(I)$ in the $L_w^p(I)$-norm:

I. The set of all bounded measurable functions on I.

II. The set of all continuous functions on I which vanish outside a bounded and closed subinterval of Int I.

Proof II. Let $f \in L_w^p(I)$ so that

(1) $$\int_I |f|^p \, w \, dt < +\infty.$$

Next let $\varepsilon \in (0, +\infty)$.

In view of (1), there exists a bounded and closed interval $[a,b] \subset \text{Int } I$ so large that

(2) $$\int_{I-[a,b]} |f|^p \, w \, dt < \frac{1}{2} \varepsilon^p.$$

By 1., there exists a continuous function f_0 on $[a,b]$ such that

(3) $$\int_a^b |f-f_0|^p \, w \, dt < \frac{1}{2} \left(\frac{1}{2} \varepsilon \right)^p$$

Set

(4) $$M_0 = \max_{a \leq t \leq b} |f_0(t)| .$$

In view of 3) and the absolute continuity of the Lebesgue integral there exists $\delta \in (0, \frac{1}{2}(b-a))$ so small that

(5) $$2^p M_0^p \left(\int_a^{a+\delta} + \int_{b-\delta}^b \right) w \, dt < \frac{1}{2} \left(\frac{1}{2} \varepsilon \right)^p.$$

Finally there obviously exists a function f_1 such that

(6) f_1 is continuous on I,

(7) $f_1(t) = 0$ for all $t \in I - [a,b]$,

(8) $\qquad f_1(t) = f_0(t)$ for all $t \in [a+\delta,\ b-\delta]$,

(9) $\qquad f_1$ is linear on $[a,\ a+\delta]$ and $[b-\delta,\ b]$.

By (6)-(9) and (4),

(10) $$|f_1(t)| \overset{(6)-(9)}{\leq} |f_0(t)| \overset{(4)}{\leq} M_0 \quad \text{for all } t \in [a,\ a+\delta] \cup [b-\delta,\ b].$$

Hence

(11) $$\Big[\int_a^b |f-f_1|^p\, w\, dt\Big]^{\frac{1}{p}} \leq \Big[\int_a^b |f-f_0|^p\, w\, dt\Big]^{\frac{1}{p}} + \Big[\int_a^b |f_0-f_1|^p\, w\, dt\Big]^{\frac{1}{p}} \overset{(3)}{<}$$

$$\overset{(3)}{<} \left(\tfrac{1}{2}\right)^{\frac{1}{p}} \tfrac{1}{2}\varepsilon + \Big[\Big(\int_a^{a+\delta} + \int_{b-\delta}^{b}\Big)\underbrace{|f_0-f_1|^p}_{\leq (2M_0)^p \text{ by } (4),(10)}\, w\, dt + \int_{a+\delta}^{b-\delta} \underbrace{|f_0-f_1|^p}_{=0 \text{ by } (8)}\, w\, dt\Big]^{\frac{1}{p}} \overset{(5)}{\leq}$$

$$\overset{(5)}{\leq} \left(\tfrac{1}{2}\right)^{\frac{1}{p}} \tfrac{1}{2}\varepsilon + \left(\tfrac{1}{2}\right)^{\frac{1}{p}} \tfrac{1}{2}\varepsilon = \left(\tfrac{1}{2}\right)^{\frac{1}{p}} \varepsilon .$$

Consequently

$$\int_I |f-f_1|^p\, w\, dt = \int_{I-[a,b]} \underbrace{|f-f_1|^p}_{=0 \text{ by } (7)}\, w\, dt + \int_a^b |f-f_1|^p\, w\, dt \overset{(2),(11)}{<}$$

$$\overset{(2),(11)}{<} \tfrac{1}{2}\varepsilon^p + \tfrac{1}{2}\varepsilon^p = \varepsilon^p,$$

i.e. $\|f-f_1\|_p < \varepsilon$, which proves II.

I. follows from the fact that the set of all continuous functions on I which vanish outside a bounded and closed subinterval of Int I is a subset of all bounded measurable functions on I, and from II.

3. Definition. A real or complex function on a set S is said to be simple on S if the set of its function values on S is finite.

4. Theorem. Suppose:

1) I is a subinterval of $(-\infty, +\infty)$ with terminal points a, b such that $-\infty \leq a < b \leq +\infty$.

2) $0 < w(t) < +\infty$ a.e. on I.

3) $\int_I w\, dt < +\infty$.

4) $1 \leq p < +\infty$.

Then the set of all simple functions on I is dense in $L_w^p(I)$ in the $L_w^p(I)$-norm.

Proof. Fix any $f \in L_w^p(I)$, and any $\varepsilon \in (0, +\infty)$.

Without loss of generality we may suppose that f is real-valued on I because otherwise the following construction would be carried out for its real and imaginary parts separately.

By I. in 1. and 2., there exists a bounded measurable function g on I such that

(1) $$\| f-g \|_p < \frac{1}{2} \varepsilon .$$

Since g is bounded on I we have

(2) $$|g(t)| \leq M < +\infty \quad \text{for all} \quad t \in I.$$

For any $n = 1,2,\ldots$ define the function g_n as follows:

(3) $$g_n(t) = \begin{cases} n & \text{if } t \in I,\ g(t) \geq n, \\ \frac{k-1}{2^n} & \text{if } t \in I,\ \frac{k-1}{2^n} \leq g(t) < \frac{k}{2^n} \quad \text{for some } k = 1,2,\ldots,2^n n, \\ -\frac{k-1}{2^n} & \text{if } t \in I,\ -\frac{k}{2^n} < g(t) \leq -\frac{k-1}{2^n} \quad \text{for some } k = 1,2,\ldots,2^n n, \\ -n & \text{if } t \in I,\ g(t) \leq -n. \end{cases}$$

By (3) and 3., g_n is a simple function such that

(4) $$|g(t)-g_n(t)| < \frac{1}{2^n} \quad \text{if} \quad t \in I, \quad |g(t)| \leq n.$$

Finally for any $n = 1,2,\ldots$ so large that

(5) $$M \leq n, \quad \frac{1}{2^n} \left[\int_I w\, dt \right]^{\frac{1}{p}} < \frac{1}{2}\varepsilon .$$

By (2) and (5), $|g(t)| \overset{(2)}{\leq} M \overset{(5)}{\leq} n$ for all $t \in I$. Hence, by (4),

$|g(t) - g_n(t)| < \frac{1}{2^n}$ for all $t \in I$. Therefore, by (5),

(6) $$\| g-g_n \|_p = \left[\int_I |g-g_n|^p\, w\, dt \right]^{\frac{1}{p}} \leq \frac{1}{2^n} \left[\int_I w\, dt \right]^{\frac{1}{p}} \overset{(5)}{<} \frac{1}{2}\varepsilon .$$

By the Minkowski inequality, (1) and (6),

$$\| f-g_n \|_p \overset{\text{Minkowski}}{\leq} \| f-g \|_p + \| g-g_n \|_p \overset{(1),(6)}{<} \frac{1}{2}\varepsilon + \frac{1}{2}\varepsilon = \varepsilon ,$$

which completes the proof.

CHAPTER 2.:

A unified theory of the classical orthogonal polynomials

§5. Orthogonal polynomials in L_w^2 (I).

1. Theorem. Suppose:

1) p_j is a polynomial of degree j with real (complex) coefficients $(j = 0,1,\ldots)$.

2) p is a polynomial of degree k with real (complex) coefficients.

Then the following holds:

I. There exists a real (complex) $(k+1)$-tuple $\alpha_0,\ldots,\alpha_k$ with $\alpha_k \neq 0$ such that $p(t) = \sum_{j=0}^{k} \alpha_j\, p_j(t)$ for all complex t.

II. The $(k+1)$-tuple $\alpha_0,\ldots,\alpha_k$ is uniquely determined.

Proof. Statement I. is obviously true for $k = 0$.

Let I. be true for some non-negative integer k, and let p be a polynomial of degree $k + 1$ with real (complex) coefficients. Since, by 1), p_{k+1} is also a polynomial of degree $k + 1$ with real (complex) coefficients there exists a real (complex) number $\alpha_{k+1} \neq 0$ such that $p(t) - \alpha_{k+1}\, p_{k+1}(t)$ is a polynomial of degree $\leq k$ with real (complex) coefficients. Consequently, by assumption, ther exists a real (complex) $(k+1)$-tuple $\alpha_0,\ldots,\alpha_k$ wuch that $p(t)-\alpha_{k+1}\, p_{k+1}(t) = \sum_{j=0}^{k} \alpha_k\, p_k(t)$ for all complex t, so that I. is also true for $k+1$.

II. If there existed two real (complex) (k+1)-tuples $\alpha_0,\dots,\alpha_k$ and $\beta_0,\dots,\beta_k$ such that $p(t) = \sum_{j=0}^{k} \alpha_j\, p_j(t) = \sum_{j=0}^{k} \beta_j\, p_j(t)$ for all complex t then we would have

$$(1) \qquad \sum_{j=0}^{k} (\beta_j-\alpha_j)\, p_j(t) = 0 \quad \text{for all complex } t.$$

If $\beta_j-\alpha_j \neq 0$ at least for one $j = 0,1,\dots,k$ then, by 1), the left-hand side of (1) is a polynomial of degree ≥ 0 so that it cannot be equal to zero for all complex t in contradiction with (1). Consequently $\beta_j = \alpha_j$ for all $j = 0,1,\dots,k$.

2. Theorem. Suppose:

1) I is a non-empty subinterval of $(-\infty,+\infty)$.

2) $x_k(t) = t^k$ for all $t \in I$, $k = 0,1,\dots$

3) $0 < w(t) < +\infty$ a.e. in I.

4) $m_k = \int_I t^k\, w(t)\, dt =$ finite for all $k = 0,1,\dots$.

5) $$\Delta_k = \begin{vmatrix} m_0 & m_1 & \cdots & m_k \\ m_1 & m_2 & & m_{k+1} \\ \cdots & \cdots & \cdots & \cdots \\ m_k & m_{k+1} & \cdots & m_{2k} \end{vmatrix} \quad \text{for all } k = 0,1,\dots$$

Then:

I. $\Delta_k > 0$ for $k = 0,1,\dots$

II. The functions

$$y_0(t) = x_0(t) = 1 \quad \text{for all complex } t,$$

$$y_k(t) = \begin{vmatrix} m_0 & m_1 & \cdots & m_{k-1} & x_0(t) \\ m_1 & m_2 & \cdots & m_k & x_1(t) \\ \cdots & \cdots & \cdots & \cdots & \cdots \\ m_k & m_{k+1} & \cdots & m_{2k-1} & x_k(t) \end{vmatrix} = \begin{vmatrix} m_0 & m_1 & \cdots & m_{k-1} & 1 \\ m_1 & m_2 & \cdots & m_k & t \\ \cdots & \cdots & \cdots & \cdots & \cdots \\ m_k & m_{k+1} & \cdots & m_{2k-1} & t^k \end{vmatrix}$$ for all complex and all $k = 1,2$

have have the following properties:

(i) y_k is a polynomial of degree k with real coefficients $(k = 0,1,\ldots)$.

(ii) $y_0, y_1, \ldots$ is an orthogonal system on I with respect to w.

(iii) $\| y_0 \|^2_{L^2_w(I)} = \Delta_0 > 0,$

$\| y_k \|^2_{L^2_w(I)} = \Delta_{k-1} \Delta_k > 0$ for $k = 1,2,\ldots$.

(iv) $\hat{y}_0(t) = \dfrac{1}{\sqrt{\Delta_0}} \; y_0(t)$ for all complex t,

$\hat{y}_k(t) = \dfrac{1}{\sqrt{\Delta_{k-1} \; \Delta_k}} \; y_k(t)$ for all complex t, and all $k = 1,2,\ldots$

is an orthonormal system on I with respect to w.

(v) If p is any polynomial of degree k with real (complex) coefficients then there exists a unique real (complex) $(k+1)$-tuple $\alpha_0,\ldots,\alpha_k$ with $a_k \neq$ such that $p(t) = \sum_{j=0}^{k} \alpha_j \, y_j(t)$ for all complex t.

(vi) If $y_0^*, y_1^*, \ldots$ is another orthogonal system on I with respect to w such that y_k^* is a polynomial of degree k with real (complex) coefficients $(k = 0,1,\ldots)$ then $y_k^*(t) = \alpha_k^* \, y_k(t)$ for all complex t where α_k^* is a real (complex) constant $(k = 0,1,\ldots)$.

<u>Proof</u> By 3.9 $L_w^2(I)$ is an inner product space with

(1) $$(x,y) = \int_I x(t)\,\overline{y(t)}\,w(t)\,dt$$

(2) $$\|x\|_{L_w^2(I)} = (x,x)^{\frac{1}{2}} = \left[\int_I |x(t)|^2\,w(t)\,dt\right]^{\frac{1}{2}} \quad \underline{\text{for all}} \quad x,y \in L_w^2(I).$$

Next

$$\|x_k\|^2_{L_w^2(I)} \overset{2),(2)}{=} \int_I |t|^{2k}\,w(t)\,dt = \int_I t^{2k}\,w(t)\,dt \overset{4)}{=} m_{2k} \overset{4)}{<} +\infty \quad (k=0,1,$$

so that

(3) $$x_k \in L_w^2(I) \quad (k = 0,1,\ldots).$$

Fix any $k = 0,1,\ldots,$ and let $\sum_{j=0}^{k} \alpha_j t^j \overset{2)}{=} \sum_{j=0}^{k} \alpha_j\, x_j(t) = 0$

for all complex t and some real (complex) $(k+1)$-tuple $\alpha_0,\ldots,\alpha_k$. Then $\alpha_0 = \ldots = \alpha_k = 0$ so that

(4) $$x_0,\ldots,x_k \text{ are linearly independent in } L_w^2(I) \quad (k = 0,1,\ldots).$$

Further

(5) $$m_{h+k} \overset{4)}{=} \int_I t^{h+k}\,w(t)\,dt = \int_I t^h\,\overline{t^k}\,w(t)\,dt \overset{2)}{=} \int_I x_h(t)\,\overline{x_k(t)}\,dt \overset{(1)}{=} (x_h, x_k$$

$$\text{for all } h,k = 0,1,\ldots$$

so that

$$\Delta_k \overset{5)}{=} \begin{vmatrix} m_0 & m_1 & \cdots & m_k \\ m_1 & m_2 & \cdots & m_{k+1} \\ \cdots & \cdots & \cdots & \cdots \\ m_k & m_{k+1} & \cdots & m_{2k} \end{vmatrix} = \begin{vmatrix} m_{0+0} & m_{0+1} & \cdots & m_{0+k} \\ m_{1+0} & m_{1+1} & \cdots & m_{1+k} \\ \cdots & \cdots & \cdots & \cdots \\ m_{k+0} & m_{k+1} & \cdots & m_{k+k} \end{vmatrix} \overset{(5)}{=} \begin{vmatrix} (x_0,x_0) & \cdots & (x_0,x_k) \\ \cdots & \cdots & \cdots \\ (x_k,x_0) & \cdots & (x_k,x_k) \end{vmatrix} \quad (k = 0,1,\ldots$$

Finally by the formulae in II.,

$$y_0(t) = x_0(t) = 1 \quad \text{for all complex } t,$$

$$(7)\quad y_k(t) \overset{\text{II.}}{=} \begin{vmatrix} m_0 & m_1 & \cdots & m_{k-1} & x_0(t) \\ m_1 & m_2 & \cdots & m_k & x_1(t) \\ \cdots & \cdots & \cdots & \cdots & \cdots \\ m_k & m_{k+1} & \cdots & m_{2k-1} & x_k(t) \end{vmatrix} \overset{(5)}{=} \begin{vmatrix} (x_0,x_0) & \cdots & (x_0,x_{k-1}) & x_0(t) \\ (x_1,x_0) & \cdots & (x_1,x_{k-1}) & x_1(t) \\ \cdots & \cdots & \cdots & \cdots \\ (x_k,x_0) & \cdots & (x_k,x_{k-1}) & x_k(t) \end{vmatrix} \quad \text{for all compl}$$

$$t, \text{ and all } k = 1,2,\ldots$$

Thus we have verified all the assumptions of the Schmidt orthogonalization theorem 1.12. Observing that, in view of (5), the inner products (x_h,x_k) $(h,k = 0,1,\ldots)$ are real we see that 4), I., III., IV., V. and VI. in 1.12 imply I., (i), (ii), (iii), (iv) and (vi) in this theorem respectively. Finally, 1. implies (v), which completes the proof.

<u>3. Definition</u>. <u>If successively</u>

I. $I = (-1,1)$, $w(t) = 1$ <u>for all</u> $t \in (-1,1)$.

II. $I = (-1,1)$, $w(t) = \dfrac{1}{\sqrt{1-t^2}}$ <u>for all</u> $t \in (-1,1)$.

III. $I = (-1,1)$, $w(t) = \sqrt{1-t^2}$ <u>for all</u> $t \in (-1,1)$.

IV. $I = (-1,1)$, $w(t) = (1-t^2)^\alpha$ <u>for all</u> $t \in (-1,1)$ <u>and some fixed</u> $\alpha \in (-1, +\infty)$.

2) $0 < w(t) < +\infty$ <u>for all</u> $t \in (-a,a)$.

3) $\int_{-a}^{a} t^k w(t)\, dt$ <u>is finite for all</u> $k = 0,1,\ldots$.

4) w <u>is an even function on</u> $(-a, a)$.

5) y_k <u>is a polynomial of degree</u> k <u>with real coefficients</u> $(k = 0,1,\ldots)$.

6) $y_0, y_1, \ldots$ <u>is an orthogonal system on</u> I <u>with respect to</u> w.

(By 3., the above assumptions are satisfied if $y_0, y_1, \ldots$ are the Legendre, Tchebysheff, conjugate Tchebysheff, Gegenbauer or Hermite polynomials.)

<u>Then</u>

(1) $y_n(-t) = (-1)^n y_n(t)$ <u>for all complex</u> t, <u>and all</u> $n = 0,1,\ldots$.

<u>Proof.</u> Fix any $h = 0,1,\ldots$. By 5), $y_h(-t)$ is a polynomial of degree h with real coefficients so that, by (v) in 2., there exists a unique real $(h+1)$-tuple $\alpha_{h,0},\ldots,\alpha_{h,h}$ with $\alpha_{h,h} \neq 0$ such that

(2) $$y_n(-t) = \sum_{j=0}^{h} \alpha_{h,j}\, y_j(t) \quad \text{for all complex } t, \text{ and } h = 0,1,\ldots .$$

By 5), y_0 is an even function so that (1) holds for $n = 0$.

Fix any $n = 1,2,\ldots$. By 4), (2) and 6),

(3) $$\left\{ \begin{aligned} &\int_{-a}^{a} y_n(-t)\, y_k(t)\, w(t)\, dt \overset{t=-u}{=} \int_{-a}^{a} y_n(u)\, y_k(-u)\, w(-u)\, du \overset{4)}{=} \\ &\overset{4)}{=} \int_{-a}^{a} y_n(u)\, y_k(-u)\, w(u)\, du \overset{(2)}{=} \sum_{j=0}^{k} \alpha_{k,j} \int_{-a}^{a} y_n(u)\, y_j(u)\, w(u)\, du \overset{6)}{=} \end{aligned} \right.$$

for $k = 0,1,\ldots,n-1$.

V. $I = (-1,1)$, $w(t) = (1-t)^{\alpha}(1+t)^{\beta}$ for all $t \in (-1,1)$ and some fixed $\alpha,\beta \in (-1, +\infty)$.

VI. $I = (0, +\infty)$, $w(t) = t^{\alpha}e^{-t}$ for all $t \in (0, +\infty)$ and some fixed $\alpha \in (-1, +\infty)$.

VII. $I = (-\infty, +\infty)$, $w(t) = e^{-t2}$ for all $t \in (-\infty, +\infty)$,

then the functions $y_0, y_1, \ldots$ such that

(i) y_k is a polynomial of degree k with real coefficients $(k = 0,1,\ldots)$.

(ii) $y_0, y_1, \ldots$ is an orthogonal system on I with respect to w,

(by 2., such functions $y_0, y_1, \ldots$ exist and each of them is uniquely determined up to an arbitrary non-zero real factor) are respectively termed

I. the Legendre polynomials,

II. the Tchebysheff polynomials,

III. the conjugate Tchebysheff polynomials,

IV. the Gegenbauer polynomials with the index α,

V. the Jacobi polynomials with the indices α,β,

VI. the Laguerre polynomials with the index α,

VII. the Hermite polynomials.

4. Remark. The Legendre, Tchebysheff, and conjugate Tchebysheff polynomials are the Gegenbauer polynomials with the indices $\alpha = 0$, $\alpha = -\frac{1}{2}$ respectively. The Gegenbauer polynomials are the Jacobi polynomials with the indices $\alpha = \beta$.

5. Theorem. Suppose;

1) I is a subinterval of $(-\infty, +\infty)$ with terminal points $-a$, a such that $a \in (0, +\infty)$.

But (2) for $h = n$, (3) and 1.21 imply

(4) $$y_n(-t) = \alpha_{n,n}\, y_n(t) \text{ for all complex } t.$$

Denoting the leasing coefficient of y_n by a_n, and comparing the leading coefficients on both the sides of (4), we obtain $(-1)^n a_n = \alpha_{n,n} a_n$. Since, by 5), $a_n \neq 0$ it follows that $\alpha_{n,n} = (-1)^n$. Setting this into (4) we obtain (1) for $n = 1,2,\ldots,$ which completes the proof.

6. Remarks. All the theorems in this chapter are well-known. The orthogonalization theorem in 2. has been formulated as completely as possible using some results from Natanson (12), vol. 2, pp. 45-46, with the same purpose as explained in 1.29. The result in 5. has been taken from Jackson (10).

§ 6. The classical weight function

1. Definition. Suppose:

1) I is a subinterval of $(-\infty,+\infty)$ with terminal points a, b such that $-\infty \leq a < b \leq +\infty$.

2) $0 < w(t) < +\infty$ for all $t \in (a,b)$

3) $\int_a^b t^k w(t)\,dt$ is finite for all $k = 0,1,\ldots$

4) The function w satisfies the differential equation

$$\frac{w'(t)}{w(t)} = \frac{w_1(t)}{w_2(t)} \quad \text{for all} \quad t \in (a,b),$$

where w_1 and w_2 are polynomials with real coefficients such that

(i) $w_1(t) = w_{1,0} + w_{1,1}\,t$ for all $t \in (a,b)$,

(ii) $w_2(t) = w_{2,0} + w_{2,1}\,t + w_{2,2}\,t^2 > 0$ for all $t \in (a,b)$,

(iii) $\lim\limits_{t \to a+} t^k w_2(t)\,w(t) = \lim\limits_{t \to b-} t^k w_2(t)\,w(t) = 0$ for all $k = 0,1,\ldots$

Then we term w a classical weight function on I.

2. Remark. By 4) in 1., a classical weight function w on I has derivatives of all orders on (a,b), and all are finite on (a,b).

3. Theorem.

I. The weight function w of the Jacobi polynomials with indices $\alpha,\beta \in (-1,+\infty)$ is a classical weight function on $(-1,1)$. In 1., we may choose $w_1(t) = (\beta-\alpha)-(\beta+\alpha)t$, $w_2(t) = 1-t^2$.

II. The weight function w of the Laguerre polynomials with index $\alpha \in (-1,+\infty)$ is a classical weight function on $(0,+\infty)$. In 1., we may choose $w_1(t) = \alpha - t$, $w_2(t) = t$.

III. The weight function w of the Hermite polynomials is a classical weight function on $(-\infty, +\infty)$. In 1., we may choose $w_1(t) = -2t$, $w_2(t) = 1$.

Proof. I. Let $\alpha,\beta \in (-1,+\infty)$, and $w(t) = (1-t)^{\alpha}(1+t)^{\beta}$ for all $t \in (-1,1)$. Then $w'(t) = -\alpha(1-t)^{\alpha-1}(1+t)^{\beta} + \beta(1-t)^{\alpha}(1+t)^{\beta-1} = \left(-\frac{\alpha}{1-t} + \frac{\beta}{1+t}\right) w(t) = \frac{(\beta-\alpha)-(\beta+\alpha)t}{1-t^2}\, w(t)$ for all $t \in (-1,1)$, so that, in 1., we may choose w_1 and w_2 as accordingly. Then all the assumptions in 1. are easy to verify.

II. Let $\alpha \in (-1,+\infty)$, and $w(t) = t^{\alpha} e^{-t}$ for all $t \in (0,+\infty)$. Then $w'(t) = \alpha\, t^{\alpha-1} e^{-t} - t^{\alpha} e^{-t} = \left(\frac{\alpha}{t} - 1\right) w(t) = \frac{\alpha-t}{t}\, w(t)$ for all $t \in (0,+\infty)$ so that, in 1., we may choose w_1 and w_2 accordingly. Then all the assumptions in 1. are easy to verify.

III. Let $w(t) = e^{-t^2}$ for all $t \in (-\infty,+\infty)$. Then $w'(t) = -2t\, e^{-t^2} = -2t\, w(t)$ for all $t \in (-\infty,+\infty)$ so that, in 1., we may choose w_1 and w_2 accordingly. Then again, all the assumptions in 1. are easy to verify.

4. Theorem. Suppose:

1) I is a subinterval if $(-\infty,+\infty)$ with terminal points a,b such that $-\infty \leq a < b \leq +\infty$.

2) w is a classical weight function on I.

3) $u = L(t)$ is a one-to-one linear transformation of $(-\infty,+\infty)$ onto itself.

4) $I = L(J)$ so that J is a subinterval of $(-\infty,+\infty)$ with the terminal points A,B such that $-\infty \leq A < B \leq +\infty$, and $L((A,B)) = (a,b)$.

5) $W(t) = w[L(t)]$ for all $t \in J$.

Then the following holds:

I. W is a classical weight function on J.

II. If $w_{1,0}, w_{1,1}, \dots, w_{2,2}$ are the coefficients of w in 1. then the corresponding coefficients $W_{1,0}, W_{1,1}, \dots, W_{2,2}$ of W may be chosen in such a way that $W_{1,1} = k\, w_{1,1}$ and $W_{2,2} = k\, w_{2,2}$ for some $k \in (0,+\infty)$.

Proof. By 3), there exist $\ell_1, \ell_2 \in (-\infty,+\infty)$ such that $\ell_1 \neq 0$ and

(1) $$u = L(t) = \ell_1 t + \ell_2 \quad \text{for all } t \in (-\infty,+\infty).$$

By 5),(1) and 2),

$$\frac{W'(t)}{W(t)} \overset{5)}{=} \frac{w'[L(t)]\,L'(t)}{w[L(t)]} \overset{(1)}{=} \ell_1 \frac{w'(u)}{w(u)} \overset{2)}{=} \ell_1 \frac{w_1(u)}{w_2(u)} = \frac{W_1(t)}{W_2(t)}$$

for all corresponding $t \in J$, $u \in I$,

where, by (2),(1) and 2)

$$(3)\begin{cases} W_1(t) \overset{(2)}{=} \ell_1 w_1(u) \overset{(1)}{=} \ell_1 w_1(\ell_1 t + \ell_2) \overset{2)}{=} \ell_1[w_{1,0} + w_{1,1}(\ell_1 t + \ell_2)] \\ \qquad = \ell_1(w_{1,0} + w_{1,1}\ell_2) + \ell_1^2 W_{1,1}\, t, \\ W_2(t) \overset{(2)}{=} \dfrac{w_2(u)}{0 \text{ by } 2)} = w_{2,0} + w_{2,1}\, u + w_{2,2}\, u^2 \overset{(1)}{=} w_{2,0} + w_{2,1}(\ell_1 t + \ell_2) + \\ + w_{2,2}(\ell_1 t + \ell_2)^2 = (w_{2,0} + w_{2,1}\ell_2 + w_{2,2}\ell_2^2) + \ell_1(w_{2,1} + 2w_{2,2}\ell_2).t + \ell_1^2 w_{2,2}.t^2 \\ \qquad \text{for all corresponding } t \in J,\ u \in I. \end{cases}$$

Consequently, by (1), (3) and 5),

$$(4)\quad \begin{cases} t^k W_2(t)\, W(t) \overset{(1),(3),5)}{=} \dfrac{1}{\ell_1^k}(u-\ell_2)^k\, w_2(u)\, w(u) \quad \text{for all corresponding} \\ t \in J,\ u \in I, \text{ and } k = 0,1,\dots\ . \end{cases}$$

If t tends to the terminal points A,B of J from the interior of J then, by 3) and 4), u tends to the terminal points a,b of I from the interior of I so that, by 2) and (iii) in 1., the expression on the right-hand side of (4) tends to zero, i.e.

$$(5)\qquad \lim_{\substack{t \to A \\ t \in J}} t^k W_2(t)\, W(t) = \lim_{\substack{t \to B \\ t \in J}} t^k W_2(t)\, W(t) = 0 \quad \text{for } k = 0,1,\dots\ .$$

By (2), (3) and (5), W is a classical weight function. Finally, if $w_{1,0}, w_{1,1}, \dots$ and $W_{1,0}, W_{1,1}, \dots$ are the corresponding coefficients of w and W in 1. respectively it follows from (3) that $W_{1,1} = \ell_1^2 w_{11}$, $W_{2,2} = \ell_1^2 w_{2,2}$, where $\ell_1^2 \in (0,+\infty)$, which completes the proof.

<u>5. Remark</u>. I. <u>Let</u> $-\infty < a < b < +\infty$, $L(t) = \frac{1}{2}[(b-a)t + (b+a)]$ <u>for all</u> $t \in (-\infty,+\infty)$. <u>Then</u> L <u>is a one-to-one linear transformation of</u>

$(-\infty,+\infty)$ onto itself such that $L((-1,1)) = (a,b)$.

II. Let $-\infty = a < b < +\infty$, $L(t) = -t + b$ for all $t \in (-\infty,+\infty)$. Then L is a one-to-one linear transformation of $(-\infty,+\infty)$ onto itself such that $L((0,+\infty)) = (a,b)$.

III. Let $-\infty < a < b = +\infty$, $L(t) = t + a$ for all $t \in (-\infty,+\infty)$. Then L is a one-to-one linear transformation of $(-\infty,+\infty)$ onto itself such that $L((0,+\infty)) = (a,b)$.

6. Theorem. Suppose:

1) I is a subinterval of $(-\infty,+\infty)$ with terminal points, a,b such that $-\infty \leq a < b \leq +\infty$.

2) w is a classical weight function on I.

Then the following holds:

I. If $-\infty < a < b < +\infty$ there exists $C \in (0,+\infty)$, $\alpha,\beta \in (-1,+\infty)$ and a linear transformation L of $(-\infty,+\infty)$ onto itself such that

$$L((a,b)) = (-1,1),\ w(t) = C\,[1-L(t)]^{\alpha}\,[1+L(t)]^{\beta} \quad \text{for all} \quad t \in (a,b).$$

II. If $-\infty = a < b < +\infty$ or $-\infty < a < b = +\infty$ there exist $C \in (0,+\infty)$, $\alpha \in (-1,+\infty)$ and a linear transformation L of $(-\infty,+\infty)$ onto itself such that

$$L((a,b)) = (0,+\infty),\ w(t) = C\,L^{\alpha}(t)\,e^{-L(t)} \quad \text{for all} \quad t \in (a,b).$$

where we write here and in the sequel $L^{\alpha}(t) = [L(t)]^{\alpha}$ (α real).

III. If $a = -\infty$, $b = +\infty$, there exists $C \in (0,+\infty)$ and a linear transformation L of $(a,b) = (-\infty,+\infty)$ onto itself such that

$$w(t) = C\,e^{-L^2(t)} \quad \text{for all} \quad t \in (a,b) = (-\infty,+\infty).$$

(Thus, the theorem asserts that every classical weight function may be obtained from the weight function for one of the Jacobi, Laguerre or Hermite polynomials by means of a one-to-one linear transformation of the variable, and by multiplication by a positive constant factor).

Proof. By 5., there exists a one-to-one linear transformation L_1 of $(-\infty,+\infty)$ onto itself such that

(1) $$L_1((A,B)) = (a,b),$$

where

(2) $$\begin{cases} (A,B) = (-1,1) \text{ if } -\infty < a < b < +\infty, \\ (A,B) = (0,+\infty) \text{ if } -\infty = a < b < +\infty \text{ or } -\infty < a < b = +\infty, \\ (A,B) = (-\infty,+\infty) \text{ if } -\infty = a < b = +\infty; \end{cases}$$

in the last case in (2) we may obviously define L as the identity transformation.

Set $I = L_1(J)$ so that J is a subinterval of $(-\infty,+\infty)$ with terminal points A,B. Next set

(3) $$W(t) = w\left[L_1(t)\right] \text{ for all } t \in J.$$

By 4., W is a classical weight function on J, and if $w_{1,0}, w_{1,1}, \ldots, w_{2,2}$ are the coefficients of w in 1. then the corresponding coefficients $W_{1,0}, W_{1,1}, \ldots, W_{2,2}$ of W may be chosen in such a way that

(4) $$W_{1,1} = k\, w_{1,1},\ W_{2,2} = k\, w_{2,2} \text{ for some } k \in (0,+\infty).$$

Finally we set $W_1(t) = W_{1,0} + W_{1,1}\, t$ and $W_2(t) = W_{2,0} + W_{2,1}\, t + W_{2,2}\, t^2$ for all $t \in (A,B)$ similarly as in 1. Then we have to distinguish the following five cases:

A. <u>The polynomial</u> W_2 <u>is of degree</u> 0 so that $W_{2,0} > 0$, $W_{2,1} = W_{2,2} = 0$. Then we may without loss of generality suppose that $W_{2,0} = 1$, i.e.

(5) $$W_2(t) = 1 \quad \text{for all} \quad t \in (A,B),$$

because otherwise we could divide W_1 by $W_{2,0}$. Consequently, by 1., the differential equation for W is of the form

$$\frac{W'(t)}{W(t)} = W_{1,0} + W_{1,1}\, t \quad \text{for all} \quad t \in (A,B).$$

Since, by 2) in 1., $W(t) > 0$ for all $t \in (A,B)$ it follows that $[\log W(t)]' = W_{1,0} + W_{1,1}\, t$ for all $t \in (A,B)$ so that the general solution is

(6) $$W(t) = c\, e^{W_{1,0} t + \frac{1}{2} W_{1,1} t^2} \quad \text{for all} \quad t \in (A,B)$$

and an arbitrary constant $c \in (0,+\infty)$.

If $(A,B) = (-1,1)$ or $(A,B) = (0,+\infty)$ then, by (5) and (6), $\lim\limits_{t \to A+} W_2(t)\, W(t) \overset{(5)}{=} \lim\limits_{t \to A+} W(t) \overset{(6)}{\neq} 0$ so that (iii) in 1. is not satisfied for $k = 0$ in contradiction to 2). Therefore by (2),

(7) $$(A,B) = (-\infty,+\infty).$$

But then the condition (iii) in 1. is of the form $0 = \lim_{t \to \pm\infty} t^k W_2(t)\, W(t) \overset{(5),(6)}{=}$

$\overset{(5),(6)}{=} \lim_{t \to \pm\infty} c\, t^k e^{W_{1,0}t + \frac{1}{2} W_{1,1} t^2}$ for all $k = 0,1,\ldots,$ which implies

(8) $$-\frac{1}{2} W_{1,1} = \beta \in (0,+\infty).$$

Consequently

$$W(t) \overset{(6)}{=} c\, e^{W_{1,0}t + \frac{1}{2} W_{1,1} t^2} \overset{(8)}{=} c\, e^{W_{1,0}t - \beta t^2} \overset{(8)}{=} c\, e^{-\beta(t^2 - \frac{W_{1,0}}{\beta} t)}$$

(9) $$= c\, e^{-\beta(t^2 - 2\frac{W_{1,0}}{2\beta} t + \frac{W_{1,0}^2}{4\beta^2})} e^{\frac{W_{1,0}^{-2}}{4\beta}} = C\, e^{-\beta(t - \frac{W_{1,0}}{2\beta})^2} = C\, e^{-[\sqrt{\beta}(t - \frac{W_{1,0}}{2\beta})]^2}$$

for all $t \in (-\infty,+\infty)$ and any $C \in (0,+\infty)$.

Setting $L_2(t) = \sqrt{\beta}\,(t - \frac{W_{1,0}}{2\beta})$ for all $t \in (-\infty,+\infty)$ we thus obtain from (3) and (9) $w[L_1(t)] \overset{(3)}{=} W(t) \overset{(9)}{=} C\, e^{-L_2^2(t)}$ for all $t \in (-\infty,+\infty)$ and some $C \in (0,+\infty)$.

If L_1^{-1} is the inverse linear transformation of L_1 so that $u = L_1(t)$ for all $t \in (-\infty,+\infty)$ implies $t = L_1^{-1}(u)$ for all $u \in (-\infty,+\infty)$, and if $L = L_2 L_1^{-1}$, we obtain

(10) $$w(u) = C\, e^{-L^2(u)} \text{ for all } u \in (-\infty,+\infty), \text{ and some } C \in (0,+\infty).$$

<u>Thus, if the polynomial</u> W_2 <u>is of degree</u> 0 <u>then</u> $(A,B) = (-\infty,+\infty)$ <u>so that, by (2),</u> $(a,b) = (-\infty,+\infty)$, <u>and the weight function</u> w <u>is of the form</u> (10), <u>where</u> L <u>is a linear transformation of</u> $(a,b) = (-\infty,+\infty)$ <u>onto itself.</u>

B. <u>The polynomial</u> W_2 <u>is of degree</u> 1 so that $W_2(t) = W_{2,0} + W_{2,1}t$ for $W_{2,1} \neq 0$, i.e. $W_2(t) = W_{2,1}(t + \frac{W_{2,0}}{W_{2,1}}) = W_{2,1}(t-\tau)$ for some $W_{2,1}, \tau \in (-\infty,+\infty)$, $W_{2,1} \neq 0$. We may suppose without loss of generality that $W_{2,1} = 1$ because otherwise we could divide W_1 by $W_{2,1}$. Since, by (ii) in 1., $W_2(t) > 0$ in (A,B) we must have $\tau \in (-\infty,+\infty) - (A,B)$. Hence

(11) $$W_2(t) = t - \tau \quad \text{for some} \quad \tau \in (-\infty,+\infty) - (A,B).$$

Consequently, by 1., the differential equation for W is of the form

$$\frac{W'(t)}{W(t)} = \frac{W_{1,0} + W_{1,1}t}{t-\tau} \quad \text{for all} \quad t \in (A,B).$$

Since by 2) in 1., $W(t) > 0$ for all $t \in (A,B)$ it follows that $[\log W(t)]' =$

$$= \frac{W_{1,0} + W_{1,1}t}{t-} = \frac{(W_{1,0} + W_{1,1}\tau) + W_{1,1}(t-\tau)}{t-\tau} = W_{1,1} + \frac{W_1(t)}{t-\tau} \quad \text{for all}$$

$t \in (A,B)$ so that the general solution is

(12) $$W(t) = c\,|t-\tau|^{W_1(\tau)} e^{W_{1,1}t} \quad \text{for all} \quad t \in (A,B)$$

and an arbitrary constant $c \in (0,+\infty)$.

If $(A,B) = (-\infty,+\infty)$ then $(-\infty,+\infty) - (A,B) = \emptyset$ and no $\tau \in (-\infty,+\infty) - (A,B)$ can be found in contradiction with (11). If $(A,B) = (-1,1)$ then, by (iii) in 1. for $k = 0$, (11) and (12),

$$0 \overset{(iii)}{=} \lim_{t \to \pm 1} W_2(t)\,W(t) \overset{(11),(12)}{=} \underbrace{c}_{>0} \lim_{t \to 1\pm} |t-\tau|^{W_1(\tau)+1} e^{W_{1,1}t} \quad \text{so}$$

that we require at the same time $\tau = 1$ and $\tau = -1$, which is again a contradiction. Therefore, by (2),

(13) $$(A,B) = (0,+\infty).$$

By (11) and (13), $\tau \in (-\infty,+\infty) - (A,B) \overset{(13)}{=} (-\infty,0]$ so that $t - \tau \in (0,+\infty)$ for all $t \in (0,+\infty) \overset{(13)}{=} (A,B)$. Thus by (12)

(14) $$W(t) = c(t-\tau)^{W_1(\tau)} e^{W_{1,1}t} \quad \text{for all } t \in (0,+\infty).$$

By (iii) in 1. for $k = 0$, (13),(11) and (14), $0 \overset{(iii),(13)}{=} \lim\limits_{t \to 0+} W_2(t)\, W(t) \overset{(11),(14)}{=} \underbrace{c}_{>0} \lim\limits_{t \to 0+} (t-\tau)^{W_1(\tau)+1} e^{W_{1,1}t}$ so that $\tau = 0$, $W_1(\tau) = W_1(0) = W_{1,0}$

Hence by (14)

(15) $$W(t) = c\, t^{W_{1,0}} e^{W_{1,1}t} \quad \text{for all } t \in (0,+\infty).$$

By 3) in 1., (13) and (15), $c \int_0^{+\infty} t^{W_{1,0}+k} e^{W_{1,1}t}\, dt \overset{(13),(15)}{=} \int_A^B t^k W(t)\, dt =$ finite for all $k = 0,1,\ldots$. Hence

(16) $$W_{1,0} = \alpha \in (-1,+\infty), \quad -W_{1,1} = \beta \in (0,+\infty).$$

Setting (16) into (15) we obtain

(17) $$w\left[L_1(t)\right] \overset{(3)}{=} W(t) \overset{(15),(16)}{=} c\, t^{\alpha} e^{-\beta t} = \frac{c}{\beta^{\alpha}} (\beta t)^{\alpha} e^{-\beta t} = C\, L_2^{\alpha}(t)\, e^{-L_2(t)}$$

for all $t \in (0,+\infty)$, where C is an arbitrary positive number, and $L_2(t) = \beta t$ for all $t \in (-\infty,+\infty)$. If L_1^{-1} is the inverse transformation to L_1 so that $u = L_1(t)$ for all $t \in (-\infty,+\infty)$ implies $t = L_1^{-1}(u)$ for all $u \in (-\infty,+\infty)$, and if $L = L_2 L_1^{-1}$, we thus obtain from (1),(2) and (17)

$$(18)\quad \begin{cases} L((a,b)) = (0,+\infty), \quad w(u) = C\,L^{\alpha}(u)\,e^{-L(u)} & \text{for all } u \in (a,b) \\ \text{and some } C \in (0,+\infty)\,. \end{cases}$$

<u>Thus, if the polynomial</u> W_2 <u>is of degree 1 then</u> $(A,B) = (0,+\infty)$ <u>so that, by (2), either</u> $-\infty = a < b < +\infty$ <u>or</u> $-\infty < a < b = \infty$, <u>and there exists a linear transformation</u> L <u>of</u> $(-\infty,+\infty)$ <u>onto itself such that (18) holds.</u>

C. <u>The polynomial</u> W_2 <u>is of degree</u> 2 <u>with two distinct real roots</u> $t_1 < t_2$. Then, by (ii) in 1.,

$$(19)\qquad W_2(t) = W_{2,2}(t-t_1)(t-t_2) \quad \text{for all } t \in (A,B).$$

where $W_{2,2} \neq 0$. Consequently, by 1., the differential equation for W is of the form $\dfrac{W'(t)}{W(t)} = \dfrac{W_{1,0} + W_{1,1}t}{W_{2,2}(t-t_1)(t-t_2)}$ for all $t \in (A,B)$, i.e. of the form

$$(20)\qquad \frac{W'(t)}{W(t)} = \frac{\beta}{t-t_1} + \frac{\alpha}{t-t_2} \quad \text{for all } t \in (A,B)$$

and some $\alpha,\beta \in (-\infty,+\infty)$. Since, by 2) in 1., $W(t) > 0$ for all $t \in (A,B)$ it follows that $[\log W(t)]' = \dfrac{\beta}{t-t_1} + \dfrac{\alpha}{t-t_2}$ for all $t \in (A,B)$ so that the general solution is

$$(21)\qquad W(t) = C\,|t-t_1|^{\beta}\,|t-t_2|^{\alpha} \quad \text{for all } t \in (A,B)$$

and an arbitrary $C \in (0,+\infty)$. Hence, by 3) in 1.,

$$(22) \qquad C \int_A^B t^k \, |t-t_1|^\beta \, |t-t_2|^\alpha \, dt \overset{(21)}{=} \int_A^B t^k \, W(t) \, dt \overset{3)\text{in } 1.}{=} \text{finite for } k = 0,1,\ldots$$

If $B = +\infty$ then the left-hand side of (22) diverges for all sufficiently large $k = 0,1,\ldots$ in contradiction with (22). Hence by (2).

$$(23) \qquad (A,B) = (-1,1).$$

By (iii) in 1. for $k = 0$, (19),(21) and (23).

$$(24) \qquad \begin{aligned} 0 &\overset{\text{(iii)in 1.}}{=} \lim_{t \to A+} |W_2(t)\, W(t)| \overset{(19),(21),(23)}{=} \underbrace{c|W_{2,2}|}_{>0} \lim_{t \to -1+} |t-t_1|^{\beta+1} |t-t_2|^{\alpha+1} \\ 0 &\overset{\text{(iii)in 1.}}{=} \lim_{t \to B-} |W_2(t)\, W(t)| \overset{(19),(21),(23)}{=} \underbrace{c|W_{2,2}|}_{>0} \lim_{t \to 1-} |t-t_1|^{\beta+1} |t-t_2|^{\alpha+1} \end{aligned}$$

Since $-\infty < t_1 < t_2 < +\infty$ the necessary condition for (24) to be satisfied is

$$(25) \qquad t_1 = -1, \; t_2 = 1.$$

But then, by (3), (21), (23) and (25),

$$(26) \qquad w\left[L_1(t)\right] = W(t) = C(1-t)^\alpha (1+t)^\beta \quad \text{for all} \quad t \in (-1,1).$$

Setting (23) and (25) into (22) for $k = 0$ it finally follows that

$$(27) \qquad \alpha, \beta \in (-1,+\infty).$$

Obviously the function W in (26) with $C \in (0,+\infty)$ and $\alpha,\beta \in (-1,+\infty)$ already satisfies all the assumptions in 1. for $(A,B) = (-1,1)$.

If $L = L_1^{-1}$ is the inverse linear transformation to L_1 so that $u = L_1(t)$ for all $t \in (-\infty,+\infty)$ implies $t = L_1^{-1}(u) = L(u)$ for all $u \in (-\infty,+\infty)$ we thus obtain from (1),(2),(23),(26) and (27)

$$(28)\quad \begin{cases} L((a,b)) \overset{(1),(2),(23)}{=} (-1,1), \\ w(u) \overset{(26),(27)}{=} C\left[1-L(u)\right]^{\alpha}\left[1+L(u)\right]^{\beta} \text{ for all } u \in (a,b) \text{ and any} \\ C \in (0,+\infty),\ \alpha,\beta \in (-1,+\infty). \end{cases}$$

<u>Thus if the polynomial</u> W_2 <u>is of degree 2 with two distinct real roots</u> t_1 t_2 <u>then</u> $(A,B) = (-1,1)$ <u>so that, by (2),</u> $-\infty$ a b $+\infty$. <u>Next</u> $t_1 = -1$, $t_2 = 1$, <u>and, finally, there exists a linear transformation</u> L <u>of</u> $(-\infty,+\infty)$ <u>onto itself such that (28) holds.</u>

D. <u>The polynomial</u> W_2 <u>is of degree</u> 2 <u>with a double real root</u> τ. Then $W_2(t) = W_{2,2}(t-\tau)^2$ for all $t \in (A,B)$, where $W_{2,2} \neq 0$. Since by (ii) in 1., $W_2(t) > 0$ for all $t \in (A,B)$ we may suppose that $W_{2,2} = 1$ because otherwise we could divide W_1 by $W_{2,2}$. In view of (ii) in 1. we may also suppose that $\tau \in (-\infty,+\infty) - (A,B)$. Thus

$$(29)\qquad W_2(t) = (t-\tau)^2 \text{ for some } \tau \in (-\infty,+\infty) - (A,B).$$

Consequently, by 1., the differential equation for W is of the form

$$\frac{W'(t)}{W(t)} = \frac{W_{1,0} + W_{1,1}\,t}{(t-\tau)^2} \quad \text{for all } t \in (A,B).$$

Since, by 2) in 1., $W(t) > 0$ for all $t \in (A,B)$ it follows that

$$\left[\log W(t)\right]' = \frac{W_{1,0} + W_{1,1}\,t}{(t-\tau)^2} = \frac{(W_{1,0} + W_{1,1}\tau) + W_{1,1}(t-\tau)}{(t-\tau)^2} = \frac{W_{1,1}}{t-\tau} + \frac{W_1(\tau)}{(t-\tau)^2}$$

for all $t \in (A,B)$ so that the general solution is

$$(30) \qquad W(t) = C\,|t-\tau|^{W_{1,1}}\, e^{-\frac{W_1(\tau)}{t-\tau}} \quad \text{for all} \quad t \in (A,B)$$

and an arbitrary $C \in (0,+\infty)$.

If $(A,B) = (-\infty,+\infty)$ then $(-\infty,+\infty) - (A,B) = \emptyset$ and no $\tau \in (-\infty,+\infty) - (A,B)$ can be found in contradiction with (29).

Let $(A,B) = (0,+\infty)$. Then $\tau \overset{(29)}{\in} (-\infty,+\infty) - (A,B) = (-\infty,0]$.

Let even $\tau \in (-\infty,0)$. Then, by (iii) in 1. for $k = 0$, (29) and (30),

$$0 \overset{\text{(iii) in 1.}}{=} \lim_{t \to A+} W_2(t)\, W(t) \overset{(29),(30)}{=} C \lim_{t \to 0+} |t-\tau|^{W_{1,1}+2}\, e^{\frac{W_1(\tau)}{t-\tau}} \overset{\tau\in(-\infty,0)}{=}$$

$$\overset{\tau\in(-\infty,0)}{=} \underbrace{C}_{>0}\, \underbrace{|\tau|}_{>0}^{W_{1,1}+2}\, \underbrace{e^{\frac{W_1(\tau)}{\tau}}}_{>0} > 0,$$ which is a contradiction.

Therefore $\tau = 0$, $W_1(\tau) = W_1(0) = W_{1,1}$ so that, by (29) and (30), $W_2(t) = t^2$ and $W(t) = Ct^{W_{1,1}}\, e^{-\frac{W_{1,1}}{t}}$ for all $t \in (A,B) = (0,+\infty)$. Hence it follows by (iii) in 1. that

$$0 \overset{\text{(iii) in 1.}}{=} \lim_{t \to B-} t^k\, W_2(t)\, W(t) = \underbrace{C}_{>0} \lim_{t \to +\infty} t^{W_{1,1}+k+2}\, e^{-\frac{W_{1,1}}{t}} =$$

$= +\infty$ for all sufficiently large $k = 0,1,\ldots,$ which is again a contradiction. Consequently the case $(A,B) = (0,+\infty)$ is not possible either.

Therefore, by (2), $(A,B) = (-1,1)$. Then $\tau \overset{(29)}{\in} (-\infty,+\infty) - (A,B) =$

$= (-\infty,+\infty) - (-1,1) = (-\infty,-1] \cup [1,+\infty)$. If $\tau \neq -1$ then by (iii) in 1.

for $k = 0$, (29) and (30), $0 \overset{\text{(iii) in 1.}}{=} \lim\limits_{t \to A+} W_2(t)\, W(t) \overset{(29),(30)}{=}$

$$\overset{(29),(30)}{=} C \lim_{t \to -1+} |t-\tau|^{W_{1,1}+2} e^{-\frac{W_1(\tau)}{t-\tau}} = \underbrace{C}_{>0} \underbrace{|1+\tau|}_{\neq 0}{}^{W_{1,1}+2} \underbrace{e^{\frac{W_1(\tau)}{1+\tau}}}_{>0} > 0,$$

which is a contradiction. If $\tau \neq 1$ then, by (iii) in 1. for $k = 0$,

$$\text{(29) and (30)}, \quad 0 \overset{\text{(iii) in 1.}}{=} \lim_{t \to B-} W_2(t)\, W(t) \overset{(29),(30)}{=} C \lim_{t \to 1-} |t-\tau|^{W_{1,1}+2} e^{-\frac{W_1(\tau)}{t-\tau}} =$$

$= \underbrace{C}_{>0} \underbrace{|1-\tau|}_{\neq 0}{}^{W_{1,1}+2} e^{-\frac{W_1(\tau)}{1-\tau}} > 0$, which is again a contradiction. Since our τ satisfies at least one of the inequalities $\tau \neq -1$ and $\tau \neq 1$ it follows that the condition (iii) in 1. is never satisfied for $k = 0$. Therefore the case $(A,B) = (-1,1)$ is not possible either.

<u>Thus the case</u> D. <u>cannot occur at all</u>.

E. <u>The polynomial</u> W_2 <u>is of degree</u> 2 <u>with two conjugate complex non-real roots</u> $\xi \pm i\eta$, <u>where</u> $\eta \in (0,+\infty)$. Then

$$W_2(t) = W_{2,2}\,[t-(\xi - i\eta)][t-(\xi + i\eta)] = W_{2,2}\,[\underbrace{(t-\xi)^2}_{\geq 0} + \underbrace{\eta^2}_{>0}] \quad \text{for}$$

all $t \in (A,B)$. Since, by (ii) in 1., $W_2(t) > 0$ for all $t \in (A,B)$ we have $W_{2,2} > 0$. Consequently we may suppose that $W_{2,2} = 1$ because otherwise we could divide W_1 by $W_{2,3}$. Hence

$$W_2(t) = (t-\xi)^2 + \eta^2 \quad \text{for all } t \in (A,B). \tag{31}$$

Consequently, by 1., the differential equation for W is of the form

$$\frac{W'(t)}{W(t)} = \frac{W_{1,0} + W_{1,1}t}{(t-\xi)^2 + \eta^2} \quad \text{for all} \quad t \in (A,B).$$

Since, by 2) in 1., $W(t) > 0$ for all $t \in (A,B)$ it follows that

$$[\log W(t)]' = \frac{W_{1,0} + W_{1,1}t}{(t-\xi)^2 + \eta^2} = \frac{(W_{1,0} + W_{1,1}\xi) + W_{1,1}(t-\xi)}{(t-\xi)^2 + \eta^2} =$$

$$= \frac{1}{2} W_{1,1} \frac{2(t-\xi)}{(t-\xi)^2 + \eta^2} + \frac{W_1(\xi)}{(t-\xi)^2 + \eta^2} = \frac{1}{2} W_{1,1} \left\{ \log \left[(t-\xi)^2 + \eta^2 \right] \right\}' +$$

$$+ \frac{W_1(\xi)}{\eta^2} \frac{1}{\left(\frac{t-\xi}{\eta}\right)^2 + 1} \quad \text{for all} \quad t \in (A,B) \quad \text{so that the general solution is}$$

$$(32) \qquad W(t) = C \left[(t-\xi)^2 + \eta^2 \right]^{\frac{1}{2} W_{1,1}} e^{\frac{W_1(\xi)}{\eta} \arctan \frac{t-\xi}{\eta}} \quad \text{for all } t \in (A,B)$$

and an arbitrary $C \in (0,+\infty)$.

If $(A,B) = (-1,1)$ or $(A,B) = (0,+\infty)$ then, by (iii) in 1. for $k = 0$, (31) and (32),

$$0 \overset{\text{(iii) in 1.}}{=} \lim_{t \to A+} W_2(t)\, W(t) \overset{(31),(32)}{=} \lim_{t \to A+} C \left[(t-\xi)^2 + \eta^2 \right]^{\frac{1}{2} W_{1,1}+1} e^{\frac{W_1(\xi)}{\eta} \arctan \frac{t-\xi}{\eta}} >$$

$$> 0,$$

which is a contradiction. Consequently, by (2), $(A,B) = (-\infty,+\infty)$. But then, by (32) and 3) in 1.,

$$C \int_{-\infty}^{+\infty} t^k \left[(t-\xi)^2+\eta^2\right]^{\frac{1}{2}} W_{1,1}\, e^{\frac{W_1(\xi)}{\eta} \arctan \frac{t-\xi}{\eta}}\, dt \overset{(32)}{=} \int_A^B t^k W(t)\, dt \overset{3)\text{in } 1.}{=}$$

$=$ finite for $k = 0,1,\ldots$.

Since the integral on the left-hand side diverges for all sufficiently large $k = 0,1,\ldots$ we have a contradiction again.

Consequently the case E. cannot occur.

But the results obtained in A.-E. imply our theorem.

7. Theorem. Suppose

1) I is subinterval of $(-\infty,+\infty)$ with terminal points a,b such that $-\infty \leq a < b \leq +\infty$.

2) w is a classical weight function on I.

Then, using the same notation as in 1., we have

(1) $$w_{1,1} + n\, w_{2,2} \neq 0 \quad \text{for} \quad n = 2,3,\ldots .$$

Proof. If w is the weight function of the Jacobi polynomials with indices $\alpha,\beta \in (-1,+\infty)$, the Laguerre polynomials with index $\alpha \in (-1,+\infty)$ or the Hermite polynomials, it easily follows from 3. that the condition (1) is satisfied.

If w is a general classical weight function then, by 6., w may be obtained from one of the preceding three kinds of weight functions by means of a one-to-one linear transformation of the variable, and by multiplying the result by a positive constant factor. Since, by 4., these operations merely multiply both the coefficients $w_{1,1}$ and $w_{2,2}$ of w in 1. by the same positive factor k the condition (1) still remains satisfied.

8. Theorem. Suppose:

1) I is a subinterval of $(-\infty,+\infty)$ with terminal points a,b such that $-\infty \leq a < b \leq +\infty$.

2) w is a classical weight function on I.

3) $G = K - [(-\infty,+\infty) - (a,b)]$.

Then the following holds:

I. There exists a holomorphic extension of w from (a,b) into G.

II. Denoting that extension again by w we have $w(t) \neq 0$ for all $t \in G$.

Proof. By 5.3, the weight functions of the Jacobi polynomials with indices $\alpha,\beta \in (-1,+\infty)$, the Laguerre polynomials with index $\alpha \in (-1,+\infty)$ and the Hermite polynomials obviously have the properties I. and II.

If w is a general classical weight function the, by 6., w may be obtained from one of the prece ding three kinds of weight functions by means of a one-to-one linear transformation of the variable, and by multiplying the result by a positive constant factor. Consequently w must again have the properties I. and II.

9. Remark In the sequel we will need the following properties of the gamma function Γ and the beta function B:

$$(1) \qquad \Gamma(x) = \int_0^{+\infty} t^{x-1} e^{-t}\, dt \quad \text{for all} \quad x \in (0,+\infty),$$

(2) $$\Gamma(x+n) = \prod_{j=0}^{n-1} (x+j)\,\Gamma(x) \quad \text{for all } x \in (0,+\infty),\ n = 1,2,\ldots,$$

(3) $$\Gamma(n) = (n-1)! \quad \text{for } n = 1,2,\ldots,$$

(4) $$\Gamma(n+\tfrac{1}{2}) = \frac{1}{4^n}\,\frac{(2n)!}{n!}\,\sqrt{\pi} \quad \text{for } n = 0,1,\ldots,$$

(5) $$B(x,y) = \int_0^1 t^{x-1}(1-t)^{y-1}\,dt \quad \text{for all } x,y \in (0,+\infty),$$

(6) $$B(x,y) = \frac{\Gamma(x)\,\Gamma(y)}{\Gamma(x+y)} \quad \text{for all } x,y \in (0,+\infty).$$

<u>10. Lemma.</u> <u>Let</u> w <u>be the weight function of the Jacobi polynomials with indices</u> $\alpha,\beta \in (-1,+\infty)$ <u>so that, by 5.3 and 3.,</u>

(1) $$w(t) = (1-t)^{\alpha}(1+t)^{\beta}, \quad w_2(t) = 1-t^2 \quad \underline{\text{for}} \quad t \in (-1,1).$$

<u>Then</u>

(2) $$\int_{-1}^{1} w_2^n(t)\,w(t)\,dt = 2^{2n+\alpha+\beta+1}\,\frac{\Gamma(n+\alpha+1)\,\Gamma(n+\beta+1)}{\Gamma(2n+\alpha+\beta+2)} \quad \underline{\text{for}} \quad n = 0,1,\ldots\ .$$

<u>In particular, for the Tchebysheff polynomials</u> $(\alpha = \beta = -\frac{1}{2})$ <u>we have</u>

(3) $$\int_{-1}^{1} w_2^n(t)\,w(t)\,dt = \frac{1}{4^n}\binom{2n}{n}\pi \quad \underline{\text{for}} \quad n = 0,1,\ldots\ ,$$

<u>and for the conjugate Tchebysheff polynomials</u> $(\alpha = \beta = \frac{1}{2})$

(4) $$\int_{-1}^{1} w_2^n(t)\,w(t)\,dt = \frac{1}{4^{n+1}}\binom{2n+2}{n+1}\pi \quad \underline{\text{for}} \quad n = 0,1,\ldots\ .$$

<u>Proof.</u> First

$$\int_{-1}^{1} w_2^n(t)\, w(t)\, dt \overset{(1)}{=} \int_{-1}^{1} (1-t^2)^n\, (1-t)^{\alpha}(1+t)^{\beta} dt = \int_{-1}^{1} (1-t)^{n+\alpha}(1+t)^{n+\beta}\, dt =$$

$$= \left| \begin{array}{l} t = -2u+1 \\ 1-t = 2u \\ 1+t = 2(1-u) \\ dt = -2du \end{array} \quad \begin{array}{c|c} t & u \\ \hline -1 & 1 \\ 1 & 0 \end{array} \right| = 2^{2n+\alpha+\beta+1} \int_{0}^{1} u^{n+\alpha}\, (1-u)^{n+\beta}\, du \overset{(5)\text{ in } 9.}{=}$$

$$\overset{(5)\text{in } 9.}{=} 2^{2n+\alpha+\beta+1}\, B(n+\alpha+1,\ n+\beta+1) \overset{(6)\text{in } 9.}{=} 2^{2n+\alpha+\beta+1}\, \frac{\Gamma(n+\alpha+1)\ \Gamma(n+\beta+1)}{\Gamma(2n+\alpha+\beta+2)} \text{ for } n = 0,1,$$

which proves (2). Next let $\alpha = \beta = -\frac{1}{2}$. Then

$$\int_{-1}^{1} w_2^n(t)\, w(t)\, dt \overset{(2)}{=} 2^{2n}\, \frac{\Gamma^2(n+\frac{1}{2})}{\Gamma(2n+1)} \overset{(3),(4)\text{in } 9.}{=} \frac{2^{2n}}{(2n)!}\, \frac{1}{4^{2n}}\, \frac{[(2n)!]^2}{(n!)^2}\, \pi =$$

$$= \frac{1}{4^n}\, \frac{(2n)!}{(n!)^2}\, \pi = \frac{1}{4^n} \binom{2n}{n} \pi \quad \text{for } n = 0,1,\ldots,$$

which proves (3). Finally let $\alpha = \beta = \frac{1}{2}$. Then

$$\int_{-1}^{1} w_2^n t\, w(t)\, dt \overset{(2)}{=} 2^{2n+2}\, \frac{\Gamma^2(n+\frac{3}{2})}{\Gamma(2n+3)} \overset{(3)\text{in } 9.}{=} \frac{2^{2n+2}}{(2n+2)!}\, \Gamma^2((n+1)+\tfrac{1}{2}) \overset{(4)\text{ in } 9.}{=}$$

$$\overset{(4)\text{in } 9.}{=} \frac{2^{2n+2}}{(2n+2)!} \left[\frac{1}{4^{n+1}}\, \frac{(2n+2)!}{(n+1)!}\, \sqrt{\pi} \right]^2 = \frac{1}{4^{n+1}} \binom{2n+2}{n+1} \pi \quad \text{for } n = 0,1,\ldots,$$

which proves (4).

11. Lemma. Let w be the weight function of the Laguerre polynomials with the index $\alpha \in (-1,+\infty)$ so that, by 5.3 and 3.,

(1) $$w(t) = t^{\alpha} e^{-t}, \quad w_2(t) = t \quad \text{for all} \quad t \in (0,+\infty).$$

Then

$$\int_0^{+\infty} w_2^n(t)\, w(t)\, dt = \Gamma(n+\alpha+1) \quad \text{for} \quad n = 0,1,\dots \quad .$$

Proof. $$\int_0^{+\infty} w_2^n(t)\, w(t)\, dt \overset{(1)}{=} \int_0^{+\infty} t^{n+\alpha} e^{-t}\, dt \overset{(1)\text{in } 3.}{=} \Gamma(n+\alpha+1)$$

for $n = 0,1,\dots$.

12. Lemma. Let w be the weight function of the Hermite polynomials so that, by 5.3 and 3.,

(1) $$w(t) = e^{-t^2}, \quad w_2(t) = 1 \quad \text{for all} \quad t \in (-\infty,+\infty).$$

Then

$$\int_{-\infty}^{+\infty} w_2^n(t)\, w(t)\, dt = \sqrt{\pi} \quad \text{for} \quad n = 0,1,\dots \quad .$$

Proof. $$\int_{-\infty}^{+\infty} w_2^n(t)\, w(t)\, dt \overset{(1)}{=} \int_{-\infty}^{+\infty} e^{-t^2}\, dt = \sqrt{\pi} \quad \text{for} \quad n = 0,1,\dots \quad .$$

13. Remarks. The concept of a classical weight function does not occur in the mathematic literature. The fact that the weight functions w of the Jacobi, Laguerre and Hermite polynomials satisfy the differential equation in 1.4, where (i) and (ii) hold, is already mentioned in Jackson (10), and the differential equation is called the Pearson equation. On p. 142-147, Jackson investigates the solution of the Pearson equation in connection with the degree and roots of the polynomial w_2 similarly as we do in the proof of 6. On p. 147-148, he announces a result which is identical with 6. but without proof. Besides, the boundary condition (iii) in 1. is not formulated precisely there though it will play an important role in the sequel. In other books such as Szegö (14), these problems are not studied.

§7. The differential equation for orthogonal polynomials

1. Theorem. Suppose:

1) I is a non-empty subinterval of $(-\infty, +\infty)$ with boundary points a, b such that $-\infty \leq a < b \leq +\infty$.

2) w is a classical weight function on I (see 6.1!).

3) y_k is a polynomial of degree k with real coefficients $(k = 0,1,\ldots)$.

4) $y_0, y_1, \ldots$ is an orthogonal system on I with respect to w.

Then, for each $k = 0,1,\ldots,$ the polynomial y_k satisfies the differential equation

$$w_2(t)\, y''(t) + \left[w_1(t) + w_2'(t)\right] y'(t) - k\left[w_{1,1} + (k+1)\, w_{2,2}\right] y(t) = 0$$

for all $t \in K$,

where $w_1, w_2, w_{1,1}$ and $w_{2,2}$ have the same meaning as in 6.1.

Proof. By 3), the statement is correct for $k = 0$.

Fix any $k = 1,2,\ldots$. By 2) and 6.1, $\dfrac{w'(t)}{w(t)} = \dfrac{w_1(t)}{w_2(t)}$ for all $t \in (a,b)$ so that

(1) $$w_1(t)\, w(t) = w_2(t)\, w'(t) \quad \text{for all } t \in (a,b).$$

By 2) and 6.2, w has all derivatives in $[\alpha,\beta]$ for all $a < \alpha < \beta < b$, and all of them are finite.

Fix any $h = 0,1,\ldots,$ and consider the integral

$$(2) \qquad I_{h,k} = \int_a^b \left\{ w_2(t)\, y_k''(t) + \left[w_1(t) + w_2'(t) \right] y_k'(t) \right\} t^h\, w(t)\, dt.$$

Since, by 3), 6.1 and 3), the bracket $\{\ldots\}$ contains a polynomial it follows from 3) in 6.1 that the integral (2) is finite. Using (1) and integrating twice by parts we obtain

$$I_{h,k} \overset{(2)}{=} \int_a^b \left[w_2'(t)\, w(t)\, y_k'(t) + w_1(t)\, w(t)\, y_k'(t) + w_2(t)\, w(t)\, y_k''(t) \right] t^h\, dt \overset{(1)}{=}$$

$$\overset{(1)}{=} \int_a^b \left[w_2'(t)\, w(t)\, y_k'(t) + w_2(t)\, w'(t)\, y_k'(t) + w_2(t)\, w(t)\, y_k''(t) \right] t^h\, dt =$$

$$= \int_a^b \left[w_2(t)\, w(t)\, y_k'(t) \right]' t^h\, dt = \lim_{\substack{\alpha \to a+ \\ \beta \to b-}} \int_\alpha^\beta \left[w_2(t)\, w(t)\, y_k'(t) \right]' t^h\, dt =$$

$$\overset{\text{by parts}}{=} \underbrace{\lim_{\substack{\alpha \to a+ \\ \beta \to b-}} \left[w_2(t)\, w(t)\, y_k'(t)\, t^h \right]_\alpha^\beta}_{= 0 \text{ by 4iii) in 6.1.}} - \lim_{\substack{\alpha \to a+ \\ \beta \to b-}} \int_\alpha^\beta w_2(t)\, w(t)\, y_k'(t)\, h t^{h-1}\, dt =$$

$$= - \lim_{\substack{\alpha \to a+ \\ \beta \to b-}} \int_\alpha^\beta w_2(t)\, w(t)\, h\, t^{h-1}\, y_k'(t)\, dt \overset{\text{by parts}}{=}$$

$$\overset{\text{by parts}}{=} \underbrace{\lim_{\substack{\alpha \to a+ \\ \beta \to b-}} \left[w_2(t)\, w(t)\, h\, t^{h-1}\, y_k(t) \right]_\alpha^\beta}_{= 0 \text{ by 4iii) in 6.1}} + \lim_{\substack{\alpha \to a+ \\ \beta \to b-}} \int_\alpha^\beta \left[w_2(t)\, w(t)\, h\, t^{h-1} \right]' y_k(t)\, d$$

$$= \int_a^b h \left[w_2'(t)\, w(t)\, t^{h-1} + w_2(t)\, w'(t)\, t^{h-1} + (h-1) w_2(t)\, w(t)\, t^{h-2} \right] y_k(t)\, dt \overset{(1)}{=}$$

$$(1) \quad = \int_a^b h\left[w_2'(t)\, w(t)\, t^{h-1} + w_1(t)\, w(t)\, t^{h-1} + (h-1)\, w_2(t)\, w(t)\, t^{h-2}\right] y_k(t)\, dt$$

$$= \int_a^b h\left\{\left[w_1(t) + w_2'(t)\right] t^{h-1} + (h-1)\, w_2(t)\, t^{h-2}\right\} y_k(t)\, w(t)\, dt,$$

i.e. we have

$$(3) \qquad I_{h,k} = \int_a^b h\left\{\left[w_1(t) + w_2'(t)\right] t^{h-1} + (h-1)\, w_2(t)\, t^{h-2}\right\} y_k(t)\, w(t)\, dt.$$

By 2) and 6.1, the expression $h\left\{\ldots\right\}$ in (3) is either identically equal to zero or a polynomial of degree $\leq h$ so that, by 3), it is a linear combination of $y_0, y_1, \ldots, y_h$. Hence it follows by (3) and 4) that

$$(4) \qquad I_{h,k} = 0 \quad \text{for} \quad h = 0, 1, \ldots, k-1.$$

Next set

$$(5) \qquad z_k(t) = w_2(t)\, y_k''(t) + \left[w_1(t) + w_2'(t)\right] y_k'(t) \quad \text{for all} \quad t.$$

By 2) and 6.1, z_k is either identically equal to zero or a polynomial of degree $\leq k$ so that, by 3), it is a linear combination of $y_0, y_1, \ldots, y_k$, i.e.

$$(6) \qquad z_k(t) = \sum_{i=0}^{k} c_{k,i}\, y_i(t) \quad \text{for all} \quad t.$$

By (2), (4) and (5), $\int_a^b z_k(t)\, t^h\, w(t)\, dt = 0$ for $h = 0, 1, \ldots, k-1$ so that, by 3),

(7) $$\int_a^b z_k(t)\, y_h(t)\, w(t)\, dt = 0 \quad \text{for} \quad h = 0,1,\ldots, k-1.$$

By (5),(6),(7) and 1.21,

(8) $$w_2(t)\, y_k''(t) + \left[w_1(t) + w_2'(t) \right] y_k'(t) \overset{(5)}{=} z_k(t) \overset{(6),(7),1.21}{=} c_{k,k} y_k(t)$$

for all t.

Finally let a_k be the leading coefficient of the polynomial y_k so that, by 3), $a_k \neq 0$. Comparing the coefficients of t^k on both the sides of (8) we obtain by 6.1

$$w_{2,2}\, k(k-1)\, a_k + (w_{1,1} + 2w_{2,2})k = k\, w_{1,1} + (k+1)\, w_{2,2} ,$$

whence

(9) $$c_{k,k} = k(k-1)\, w_{2,2} + (w_{1,1} + 2w_{2,2})k = k \left[w_{1,1} + (k+1)w_{2,2} \right] .$$

Setting (9) into (8) we finally obtain

$$w_2(t)\, y_k''(t) + \left[w_1(t) + w_2'(t) \right] y_k'(t) - k \left[w_{1,1} + (k+1)w_{2,2} \right] = 0$$

for all t,

which completes the proof.

<u>2. Theorem</u>. <u>Let</u> $k = 0,1,\ldots$. <u>Then</u>:

I. <u>The k-th Legendre polynomial satisfies the differential equation</u>

$$(1-t^2)\, y''(t) - 2t\, y'(t) + k(k+1)\, y(t) = 0 \quad \underline{\text{for all}} \quad t.$$

II. <u>The k-th Tchebysheff polynomial satisfies the differential equation</u>

$$(1-t^2)\, y''(t) - t\, y'(t) + k^2\, y(t) = 0 \quad \underline{\text{for all}} \quad t.$$

III. <u>The k-th conjugate Tchebysheff polynomial satisfies the differential equation</u>

$$(1-t^2)\, y''(t) - 3t\, y'(t) + k(k+2)\, y(t) = 0 \quad \underline{\text{for all}} \quad t.$$

IV. The k-th Gegenbauer polynomial with the index $\alpha \in (-1,+\infty)$ satisfies the differential equation

$$(1-t^2)\, y''(t) - 2(\alpha+1)\, t\, y'(t) + k(2\alpha+k+1)\, y(t) = 0 \qquad \text{for all } t.$$

V. The k-th Jacobi polynomial with the indices $\alpha,\beta \in (-1,+\infty)$ satisfies the differential equation

$$(1-t^2)\, y''(t) - \left[(\alpha+\beta+2)t + (\alpha-\beta)\right] y'(t) + k(\alpha+\beta+k+1)\, y(t) = 0 \qquad \text{for all}$$

VI. The k-th Laguerre polynomial with the index $\alpha \in (-1,+\infty)$ satisfies the differential equation

$$ty''(t) + (\alpha+1-t)\, y'(t) + ky(t) = 0 \qquad \text{for all } t.$$

VII. The k-th Hermite polynomial satisfies the differential equation

$$y''(t) - 2t\, y'(t) + 2k\, y(t) = 0 \qquad \text{for all } t.$$

Proof follows from 1. and 6.3.

3. Remark. To my knowledge, the only book containing the result in 1. is Jackson (10).

§ 8. Auxiliary results

1. Lemma. Suppose:

1) I is a subinterval of $(-\infty,+\infty)$ with terminal points a,b such that $-\infty \leq a < b \leq +\infty$.

2) w is a classical weight function on I (see 6.1!).

3) n is a natural number.

4) using the notation introduced in 6.1,

$$y_{n,0}(t) = 1 \quad \text{for all} \quad t \in (a,b),$$

$$\left[w_2^n(t)\, w(t) \right]^{(k)} = w_2^{n-k}(t)\, w(t)\, y_{n,k}(t) \quad \text{for all} \quad t \in (a,b),\ k = 1,2,\ldots$$

Then the following statements are true:

I. $y_{n,k}$ is a real polynomial of degree $\leq k$ in (a,b) for $k = 1,2,\ldots$.

II. $y_{n,k}(t) = \left[w_1(t) + (n-k+1)\, w_2'(t) \right] y_{n,k-1}(t) + w_2(t)\, y'_{n,k-1}(t)$ for all $t \in (a,b)$, $k = 1,2,\ldots$.

III. The coefficient $a_{n,k}$ of $y_{n,k}$ at t^k satisfies the

$$a_{n,k} = \prod_{j=2n-k+1}^{2n} (w_{1,1} + j\, w_{2,2}) \quad (k = 1,2,\ldots).$$

IV. <u>The coefficient</u> $b_{n,k}$ <u>of</u> $y_{n,k}$ <u>at</u> t^{k-1} <u>satisfies the formula</u>

(1) $$b_{n,1} = w_{1,0} + n\, w_{2,1},$$

(2) $$b_{n,k} = k(w_{1,0} + n\, w_{2,1}) \prod_{j=\,2n-k+1}^{2n-1} (w_{1,1} + j\, w_{2,2}) \quad \text{for} \quad k = 2,3,\ldots \ .$$

V. $$a_{n,n} = \prod_{j=\,n+1}^{2n} (w_{1,1} + j\, w_{2,2}) \ (n = 1,2,\ldots)$$

$$b_{1,1} = w_{1,0} + w_{2,1},$$

$$b_{n,n} = n\,(w_{1,0} + n\, w_{2,1}) \prod_{j=\,n+1}^{2n-1} (w_{1,1} + j\, w_{2,2}) \ (n = 2,3,\ldots).$$

VI. $y_{n,n}$ <u>is a real polynomial of degree</u> n <u>in</u> (a,b) <u>for</u> $n = 1,2,\ldots$.

<u>Proof.</u> I. - II. By 2) and 6.1,

(3) $$w'(t) = \frac{w_1(t)}{w_2(t)}\, w(t) \quad \text{for all} \quad t \in (a,b).$$

Now we use mathematical induction with respect to k. Let $k = 1$. Then

$$w_2^{n-1}(t)\, w(t)\, y_{n,k}(t) \overset{4)}{=} \left[w_2^n(t)\, w(t)\right]' = n\, w_2^{n-1}(t)\, w_2'(t)\, w(t) + w_2^n(t)\, w'(t) \overset{(3)}{=}$$

$$(4) \qquad \overset{(3)}{=} n\, w_2^{n-1}(t)\, w_2'(t)\, w(t) + w_1(t)\, w_2^{n-1}(t)\, w(t) = w_2^{n-1}(t)\, w(t) \left[w_1(t) + n\, w_2'(t)\right] \overset{4)}{=}$$

$$\overset{4)}{=} w_2^{n-1}(t)\, w(t) \left\{ \left[w_1(t) + n\, W_2'(t)\right] \overbrace{y_{n,0}(t)}^{=1} + w_2(t)\, \overbrace{y_{n,0}'(t)}^{=0} \right\} \quad \text{for all} \quad t \in (a,b).$$

Since, by 2) and 6.1, $w_2^{n-1}(t)\, w(t) > 0$ for all $t \in (a,b)$, we may divide both sides of (4) by $w_2^{n-1}(t)\, w(t)$, and so we obtain II. for $k = 1$. From I. for $k = 1$ and from 2), 6.1 and 4) the statement I. for $k = 1$ easily follows.

Suppose now that I. and II. are true for some fixed $k = 1,2,\ldots$. Then

$$w_2^{n-k-1}(t)\, w(t)\, y_{n,k+1}(t) \overset{4)}{=} \left[w_2^n(t)\, w(t)\right]^{(k+1)} = \left\{\left[w_2^n(t)\, w(t)\right]^{(k)}\right\}' \overset{\text{ind.ass.}}{=}$$

$$\overset{\text{ind.ass.}}{=} \left[w_2^{n-k}(t)\, w(t)\, y_{n,k}(t)\right]' =$$

$$= (n-k)\, w_2^{n-k-1}(t)\, w_2'(t)\, w(t)\, y_{n,k}(t) + w_2^{n-k}(t)\, w'(t)\, y_{n,k}(t) + w_2^{n-k}(t)\, w(t)\, y_{n,k}'(t) \overset{(}{=}$$

$$\overset{(3)}{=} (n-k)\, w_2^{n-k-1}(t)\, w_2'(t)\, w(t)\, y_{n,k}(t) + w_1(t)\, w_2^{n-k-1}(t)\, y_{n,k}(t) + w_2^{n-k}(t)\, w(t)\, y_{n,k}'(t)$$

$$= w_2^{n-k-1}(t)\, w(t) \left\{\left[w_1(t) + (n-k)\, w_2'(t)\right] y_{n,k}(t) + w_2(t)\, y_{n,k}'(t)\right\} \quad \text{for all } t \in (a,b)$$

Dividing both sides by $w_2^{n-k-1}(t)\, w(t) \overset{2),6.1}{>} 0$ we obtain II. for $k + 1$.

From I. for k and from II. for k+1, 2) and 6.1 statement I. for k+1 easily follows.

III. Let $a_{n,k}$ be the coefficient of t^k $(k = 0,1,\ldots)$ in $y_{n,k}$. Fix any $k = 1,2,\ldots$. Comparing the coefficients of t^k on both sides in II. we obtain the recurrence formula

$$a_{n,k} = \left[w_{1,1} + 2(n-k+1)\, w_{2,2} \right] a_{n,k-1} + (k-1)\, w_{2,2}\, a_{n,k-1} = \left[w_{1,1} + (2n-k-1) w_{2,2} \right] a_{n,}$$

for $k = 1,2,\ldots$.

Hence follows by an easy induction with respect to k that

$$a_{n,k} = \prod_{j=2n-k+1}^{2n} (w_{1,1} + j\, w_{2,2})\, a_{n,0} \quad \text{for } k = 1,2,\ldots .$$

Since, by 4), $y_{n,0}(t) = 1$ for all $t \in (a,b)$ we have $a_{n,0} = 1$, which completes the proof of III.

IV. Let $a_{n,k}$ and $b_{n,k}$ be the coefficients of t^k and t^{k-1} respectively in $y_{n,k}$ $(k = 1,2,\ldots)$.

First let $k = 1$ so that, by II. and 4). $y_{n,1}(t) = w_1(t) + n\, w_2'(t)$ for all $t \in (a,b)$. Comparing the absolute terms we obtain (1).

Next let $k = 2,3,\ldots$. Comparing the coefficients of t^{k-1} in $y_{n,k}$ on both sides of II. we obtain the recurrence formula

$$\begin{aligned} b_{n,k} &= \left[w_{1,1} + 2(n-k+1)\, w_{2,2} \right] b_{n,k-1} + w_{2,2}\, (k-2)\, b_{n,k-1} + \\ &+ \left[w_{1,0} + (n-k+1)\, w_{2,1} \right] a_{n,k-1} + w_{2,1}\, (k-1)\, a_{n,k-1} = \\ &= \left[w_{1,1} + (2n-k)\, w_{2,2} \right] b_{n,k-1} + (w_{1,0} + n\, w_{2,1})\, a_{n,k-1} \quad (k = 2,3,\ldots \end{aligned}$$

If $k = 2$ then, by (5),(1) and III.,

$$b_{n,2} \overset{(5)}{=} \left[w_{1,1} + (2n-2)\, w_{2,2} \right] b_{n,1} + (w_{1,0} + n\, w_{2,1})\, a_{n,1} \overset{(1),III.}{=}$$

$$\overset{(I),III.}{=} \left[w_{1,1} + (2n-2)\, w_{2,2} \right] (w_{1,0} + n\, w_{2,1}) + (w_{1,0} + n\, w_{2,1})(w_{1,1} + 2n\, w_{2,}$$

$$= 2(w_{1,0} + n\, w_{2,1}) \left[w_{1,1} + (2n-1)\, w_{2,2} \right]$$

so that (2) holds for $k = 2$.

Suppose now that (2) holds for some fixed $k - 1 = 2,3,\ldots$.
Setting III. for $k - 1$ into (5) we obtain

$$b_{n,k} = \left[w_{1,1} + (2n-k)\, w_{2,2} \right] b_{n,k-1} + (w_{1,0} + n\, w_{2,1}) \prod_{j=2n-k+2}^{2n} (w_{1,1} + j\, w_{1,2})$$

Setting (2) for $k - 1$ instead of $b_{n,k-1}$ we obtain

$$b_{n,k} = \left[w_{1,1} + (2n-k)\, w_{2,2} \right] (k-1)(w_{1,0} + n\, w_{2,1}) \prod_{j=2n-k+2}^{2n-1} (w_{1,1} + j\, w_{2,2}) +$$

$$+ (w_{1,0} + n\, w_{2,1}) \prod_{j=2n-k+2}^{2n} (w_{1,1} + j\, w_{2,2}) =$$

$$= (w_{1,0} + n\, w_{2,1}) \prod_{j=2n-k+2}^{2n-1} (w_{1,1} + j\, w_{2,2}) \left\{ (k-1) \left[w_{1,1} + (2n-k) w_{2,2} \right] + (w_{1,1} + 2_n w_{2,2} \right.$$

$$= (w_{1,0} + n\, w_{2,1}) \prod_{j=2n-k+2}^{2n-1} (w_{1,1} + j\, w_{2,2}) \left\{ k\, w_{1,1} + \underbrace{\left[(k-1)(2n-k) + 2n \right]}_{=k(2n-k+1)} w_{2,2} \right\} =$$

$$= k(w_{1,0} + n\, w_{2,1}) \prod_{j=2n-k+1}^{2n-1} (w_{1,1} + j\, w_{2,2})$$

so that (2) holds for k.

V. Follows from III. and IV. for $k = n$.

VI. By V., 2) and 6.7, the coefficient $a_{n,n}$ of $y_{n,n}$ at t^n is

$$a_{n,n} \overset{V.}{=} \prod_{j=n+1}^{2n} (w_{1,1} + j\, w_{2,2}) \overset{2),6.7}{\neq} 0 \quad (n = 1,2,\ldots).$$

<u>2. Remark</u>. The preceding result will be applied in the next chapter. If we had omitted theorem 6.6 because of its lengthy proof, and so did not have its consequence 6.7 at our disposal, we would have to suppose explicitly that the classical weight function w also satisfies the condition $w_{1,1} + n\, w_{2,2} \neq 0$ for $n = 2,3,\ldots,$ from which VI. in 1. follows.

§ 9. Rodriguez theorem

1. Rodriguez theorem. Suppose:

1) I is a subinterval of $(-\infty,+\infty)$ with terminal points a,b such that $-\infty \leq a < b \leq +\infty$.

2) w is a classical weight function on I (see 6.1!).

Then the following conditions I. and II. are equivalent:

I. (i) y_n is a real polynomial of degree n $(n = 0,1,\ldots)$.

(ii) $y_0, y_1, \ldots$ form an orthogonal system on I with respect to w.

II. (iii) $0 \neq \alpha_n \in (-\infty,+\infty)$ for $n = 0,1,\ldots$.

(iv) $y_n(t) = \alpha_n \frac{1}{w(t)} \left[w_2^n(t)\, w(t) \right]^{(n)}$ for all $t \in (a,b)$, $n = 0,1,\ldots$, where w_2 is the polynomial defined in 6.1.

(By 5.2, the polynomials satisfying I. exist, and each of them is determined uniquely up to an arbitrary non-zero real factor.)

Proof. By 1), 2), 6.1 and 6.2, $0 < w(t) < +\infty$ for all $t \in (a,b)$, w has all derivatives in (a,b), and all of them are finite in (a,b). Consequently the right-hand side in (iv) is finite for all $t \in (a,b)$, $n = 0,1,\ldots$.

Suppose I. Set

$$(1) \qquad y_n^*(t) = \frac{1}{w(t)} \left[w_2^n(t)\, w(t) \right]^{(n)} \qquad \text{for all } t \in (a,b),\ n = 0,1,\ldots$$

Obviously

(2) $$y_0^*(t) = 1 \qquad \text{for all} \quad t \in (a,b),$$

and using the notation introduced in 4) in 8.1,

$$w(t)\, y_n^*(t) \overset{(1)}{=} \left[w_2^n(t)\, w(t) \right]^{(n)} \overset{8.1}{=} w(t)\, y_{n,n}(t) \quad \text{for all} \quad t \in (a,b), n = 1,2$$

Dividing both the sides by $0 < w(t) < +\infty$.

(3) $$y_n^*(t) = y_{n,n}(t) \qquad \text{for all} \quad t \in (a,b),\ n = 1,2,\ldots .$$

By (2), (3) and VI. in 8.1,

(4) y_n^* is a real polynomial of degree n in (a,b) $(n = 0,1,\ldots)$.

By (i), (1) and (2), II. obviously holds for $n = 0$. Therefore we may restrict ourselves to $n = 1,2,\ldots$. By (4) and (v) in 5.2, there exists a real $(n+1)$-tuple $\alpha_{n,0},\ldots,\alpha_{n,n}$ such that

(5) $$y_n^*(t) = \sum_{k=0}^{n} \alpha_{n,k}\, y_k(t),\ \alpha_{n,n} \neq 0 \qquad \text{for all} \quad t \in (a,b),\ n = 1,2,\ldots$$

Let $k = 0,1,\ldots,n-1$ so that $0 \leq n-k-1 \leq n-1$, $k+1 \leq n$. Set

$$(6)\quad \begin{cases} I_{nk} = \int_a^b t^k\, y_n^*(t)\, w(t)\, dt \overset{(1)}{=} \int_a^b t^k \left[w_2^n(t)\, w(t) \right]^{(n)} dt = \\ = \int_a^b t^k \left\{ \left[w_2^n(t)\, w(t) \right]^{(n-k-1)} \right\}^{(k+1)} dt = \\ = \lim\limits_{\substack{\alpha \to a+ \\ \beta \to b-}} \int_\alpha^b t^k \left\{ \left[w_2^n(t)\, w(t) \right]^{(n-k-1)} \right\}^{(k+1)} dt \quad (k = 0,1,\dots,n-1). \end{cases}$$

Setting $u(t) = t^k$, $v(t) = \left[w_2^n(t)\, w(t) \right]^{(n-k-1)}$ for all $t \in [\alpha,\beta]$,

and integrating $(k+1)$-times by parts we obtain

$$(7)\quad \begin{cases} I_{n,k} \overset{(6)}{=} \lim\limits_{\substack{\alpha \to a+ \\ \beta \to b-}} \left\{ \sum_{j=0}^{k} (-1)^j \left[u^{(j)}(t)\, v^{(k-j}(t) \right]_{t=\alpha}^{t=\beta} + \underbrace{(-1)^{k+1} \int_\alpha^\beta \underbrace{u^{(k+1)}(t)}_{=0} v(t)\, d}_{=0} \right. \\ (k = 0,1,\dots,n-1) \end{cases}$$

Since $u^{(j)}(t) = (t^k)^{(j)} = j!\, \dfrac{k(k-1)\dots(k-j+1)}{j!}\, t^{k-j} = j!\binom{k}{j} t^{k-j}$ and $v^{(k-j)}(t) =$

$= \left\{ \left[w_2^n(t)\, w(t) \right]^{(n-k-1)} \right\}^{(k-j)} = \left[w_2^n(t)\, w(t) \right]^{(n-j-1)} \overset{4)\text{in } 8.1}{=} w_2^{j+1}(t)\, w(t)\, y_{n,n-j-1}(t$

for all $t \in (a,b)$, where $y_{n,n-j-1}$ is a polynomial of degre $\leq n-j-1$, it follows from (7) that

$$(8)\quad \begin{cases} I_{n,k} \overset{(7)}{=} \lim\limits_{\substack{\alpha \to a+ \\ \beta \to b-}} \sum_{j=0}^{k} (-1)^j \left[j!\, \binom{k}{j}\, t^{k-j}\, w_2^{j+1}(t)\, w(t)\, y_{n,n-j-1}(t) \right]_{t=\alpha}^{t=\beta} = \\ = \lim\limits_{\substack{\alpha \to a+ \\ \beta \to b-}} \left[\sum_{j=0}^{k} (-1)^j \left[j \binom{k}{j}\, t^{k-j}\, w_2^{j}(t)\, y_{n,n-j-1}(t) \right] w_2(t)\, w(t) \right]_{t=\alpha}^{t=\beta} \\ \text{for } k = 0,1,\dots,n-1. \end{cases}$$

By 4iii) in 6.1, the bracket on the right-hand side tends to zero as $\alpha \to a+$, $\beta \to b-$. Hence

$$(9) \qquad \int_a^b t^k \, y_n^*(t) \, w(t)dt = I_{n,k} = 0 \qquad \text{for} \quad k = 0,1,\ldots,n-1$$

so that, by (i), also

$$(10) \qquad \int_a^b y_k(t) \, y_n^*(t) \, w(t)dt = 0 \qquad \text{for} \quad k = 0,1,\ldots,n-1.$$

But now it follows from (5) and (10) by 1.21 that

$$y_n^*(t) = \alpha_{n,n} \, y_n(t), \; \alpha_{n,n} \neq 0 \qquad \text{for all} \quad t \in (a,b), \quad n = 1,2,\ldots .$$

Consequently, setting $\dfrac{1}{\alpha_{n,n}} = \alpha_n$, we have

$$0 \neq \alpha_n \in (-\infty,+\infty) \qquad \text{for} \quad n = 1,2,\ldots,$$

$$y_n(t) = \alpha_n \, y_n^*(t) \overset{(1)}{=} \alpha_n \frac{1}{w(t)} \left[w_2^n(t) \, w(t) \right]^{(n)} \quad \text{for} \quad t \in (a,b), \; n = 1,2,$$

which completes the proof of II.

Conversely, suppose II. By 1), 2), and 5.2, there exist functions $z_1, z_2, \ldots$ such that

(11) $\qquad z_n$ is a real polynomial of degree n $(n = 0,1,\ldots)$,

(12) $\qquad z_0, z_1, \ldots$ are an orthonormal system on I with respect to w.

Since we have already proved that I. implies II. it follows from (11) and (12) that there exist $\beta_0, \beta_1, \ldots$ with the properties

(13) $$0 \neq \beta_n \in (-\infty, +\infty) \quad \text{for} \quad n = 0,1,\ldots,$$

(14) $$z_n(t) = \beta_n \frac{1}{w(t)} \left[w_2^n(t)\, w(t) \right]^{(n)} \qquad \text{for all} \quad t \in (a,b),\ n = 0,1,\ldots$$

But by II.

(15) $$0 \neq \alpha_n \in (-\infty, +\infty) \qquad \text{for} \quad n = 0,1,\ldots,$$

(16) $$\left\{ \begin{aligned} y_n(t) &= \alpha_n \frac{1}{w(t)} \left[w_2^n(t)\, w(t) \right]^{(n)} = \frac{\alpha_n}{\beta_n} \beta_n \frac{1}{w(t)} \left[w_2^n(t)\, w(t) \right]^{(n)} \overset{(14)}{=} \\ &= \frac{\alpha_n}{\beta_n} z_n(t) \quad \text{for all} \quad t \in (a,b), \quad n = 0,1,\ldots, \end{aligned} \right.$$

and (16), (15), (13), (11) and (12) imply I., which completes the proof.

<u>2. Theorem</u>. <u>Suppose:</u>

1) I <u>is a subinterval of</u> $(-\infty, +\infty)$ <u>with terminal points</u> a, b <u>such that</u> $-\infty \leq a < b \leq +\infty$.

2) w <u>is a classical weight function on</u> I (see 6.1!).

3) $0 \neq \alpha_n \in (-\infty, +\infty)$ <u>for</u> $n = 0,1,\ldots$

4) $y_n(t) = \alpha_n \frac{1}{w(t)} \left[w_2^n(t)\, w(t) \right]^{(n)}$ <u>for all</u> $t \in (a,b)$, $n = 0,1,\ldots,$ <u>where</u> w_2 <u>is the polynomial defined in</u> 6.1.

(Consequently, by Rodriguez theorem 1., y_n is a real polynomial of degree n $(n = 0,1,\ldots)$, and $y_0, y_1, \ldots$ is an orthogonal system on I with respect to w.)

Then, using the notation in 6.1, the following holds:

I. The coefficient a_n of t^n in the polynomial y_n is

$$a_n = \alpha_0 \qquad \text{for} \quad n = 0,$$

$$= \alpha_n \prod_{j=n+1}^{2n} (w_{1,1} + jw_{2,2}) \qquad \text{for} \quad n = 1,2,\ldots$$

II. The coefficient b_n of t^{n-1} in the polynomial y_n is

$$b_n = 0 \qquad \text{for} \quad n = 0,$$

$$= n\,\alpha_n\,(w_{1,0} + n\,w_{2,1}) \qquad \text{for} \quad n = 1,$$

$$= n\,\alpha_n\,(w_{1,0} + n\,w_{2,1}) \prod_{j=n+1}^{2n-1} (w_{1,1} + j\,w_{2,2}) \qquad \text{for} \quad n = 2,3,$$

III. The norm $\| y_n \|_{L^2_w(I)}$ of y_n is given by

$$\| y_n \|^2_{L^2_w(I)} = (-1)^n\, n!\, \alpha_n a_n \int_a^b w_2^n(t)\, w(t)dt \qquad \text{for} \quad n = 0,1,\ldots$$

Proof. By 4),

(1) $$y_0(t) = \alpha_0 \qquad \text{for all} \quad t \in (a,b).$$

Using the notation of 8.1 it next follows from 4) that

(2) $$y_n(t) = \alpha_n\, y_{n,n}(t) \qquad \text{for all} \quad t \in (a,b), \quad n = 1,2,\ldots$$

But the coefficients $a_{n,n}$ and $b_{n,n}$ of the polynomial $y_{n,n}$ at t^n and t^{n-1} respectively are given by formulae V. in 8.1. From the formulae and (1),(2) we immediately obtain I. and II.

III. We shall compute the norms $\| y_n \|_{L_w^2(I)}$ of y_n. The case $n = 0$ will be investigated later. Consequently fix any $n = 1,2,\ldots$. By 1)-4) and Rodriguez theorem 1.,

(3) y_n is a real polynomial of degree n $(n = 0,1,\ldots)$,

(4) $y_0, y_1, \ldots$ is an orthogonal system in I with respect to w.

Denoting the coefficients of t^n and t^{n-1} in the polynomial y_n by a_n and b_n respectively, we thus have

$$(5) \qquad \| y_n \|^2_{L_2^2(I)} = \int_a^b [y_n(t)]^2 \, w(t)dt = \int_a^b (a_n t^n + b_n t^{n-1} + \ldots) y_n(t) \, w(t)dt.$$

By (3) and 5.1, each t^k is a linear combination of $y_0, y_1, \ldots, y_k$ with real coefficients $(k = 0,1,\ldots)$ so that, by (4),

$$(6) \qquad \int_a^b t^k \, y_n(t) \, w(t)dt = 0 \quad \text{for} \quad k = 0,1,\ldots,n-1.$$

Setting (6) into (5) and using 4) we obtain

$$\| y_n \|^2_{L_w^2(I)} \overset{(6),(5)}{=} a_n \int_a^b t^n \, y_n(t) \, w(t) \, dt \overset{4)}{=} \alpha_n \, a_n \int_a^b t^n \left[w_2^n(t) \, w(t) \right]^{(n)} dt$$

$$= \alpha_n \, a_n \lim_{\substack{\alpha \to a+ \\ \beta \to b-}} \int_\alpha^\beta u(t) \, v^{(n)}(t)dt,$$

where $u(t) = t^n$ and $v(t) = w_2^n(t)\, w(t)$ for all $t \in [\alpha,\beta]$. Since, by 2) and 6.2, the functions u,v have all derivatives in $[\alpha,\beta]$ we obtain by integrating n-times by parts

$$\| y_n \|^2_{L^2_w(I)} = \alpha_n a_n \lim_{\substack{\alpha \to a+ \\ \beta \to b-}} \Big\{ \sum_{k=0}^{n-1} (-1)^k \left[u^{(k)}(t) v^{(n-k-1)}(t) \right]_{t=\beta}^{t=\alpha} + (-1)^n \int_\alpha^\beta u^{(n)}(t) v(t)$$

$$= \alpha_n a_n \lim_{\substack{\alpha \to a+ \\ \beta \to b-}} \Big\{ \sum_{k=0}^{n-1} (-1)^k k! \binom{n}{k} \left[t^{n-k} \left[w_2^n(t) w(t) \right]^{(n-k-1)} \right]_{t=\alpha}^{t=\beta} + (-1)^n n! \int_\alpha^\beta w_2^n(t) w(t)$$

Since, by 4) in 8.1, $\left[w_2^n(t)\, w(t) \right]^{(n-k-1)} = w_2^{k+1}(t)\, w(t)\, y_{n,n-k-1}(t)$ for all $t \in [\alpha,\beta]$, $k = 0,1,\ldots,n-1$, where $y_{n,n-k-1}$ is a real polynomial of degree $\leq n-k-1$, we next have

$$\| y_n \|^2_{L^2_w(I)} = \alpha_n a_n \lim_{\substack{\alpha \to a+ \\ \beta \to b-}} \Big\{ \sum_{k=0}^{n-1} (-1)^k k! \binom{n}{k} \left[t^{n-k} w_2^k(t)\, y_{n,n-k-1}(t)\, w_2(t) w(t) \right]_{t=\alpha}^{t=\beta} +$$

$$+ (-1)^n n! \int_\alpha^\beta w_2^n(t)\, w(t) dt \Big\}.$$

By 4iii) in 6.1, all terms on the right-hand side excepting the integral tend to zero as $\alpha \to a+$, $\beta \to b-$. Hence

$$(7) \qquad \| y_n \|^2_{L^2_w(I)} = (-1)^n n!\, \alpha_n a_n \int_a^b w_2^n(t)\, w(t)\, dt \qquad \text{for} \quad n = 1,2,\ldots .$$

Since, by 4), $y_0(t) = \alpha_0$ for all $t \in (a,b)$ we finally have

$$\| y_0 \|^2_{L^2_w(I)} = \int_a^b y_0^2(t)\, w(t)dt = \alpha_0^2 \int_a^b w(t)dt \overset{I.}{=} \alpha_0\, a_0 \int_a^b w(t)dt \quad \text{so}$$

that the formula (7) also holds for $n = 0$, which completes the proof of III.

<u>3. Theorem</u>. <u>Let</u> $\alpha,\beta \in (-1,+\infty)$. <u>Then the following holds</u>:

I. $y_n^{(\alpha,\beta)}$ <u>is the Jacobi polynomial of degree</u> n <u>with</u> α,β <u>if and only if there exists</u> $0 \neq \alpha_n$ $(-\infty,+\infty)$ <u>such that</u>

$$(1) \qquad y_n^{(\alpha,\beta)}(t) = \alpha_n \frac{\left[(1-t)^{n+\alpha}(1+t)^{n+\beta}\right]^{(n)}}{(1-t)^{\alpha}(1+t)^{\beta}} \quad \text{for all} \quad t \in (-1,1)$$

$(n = 0,1,\ldots)$.

II. <u>The coefficient</u> $\alpha_n^{(\alpha,\beta)}$ <u>of</u> t^n <u>in the polynomial</u> (1) <u>is</u>

$$a_n^{(\alpha,\beta)} = \begin{cases} \alpha_0 & \underline{\text{for}} \quad n = 0, \\ (-1)^n \dfrac{\Gamma(2n+\alpha+\beta+1)}{\Gamma(n+\alpha+\beta+1)}\, \alpha_n & \underline{\text{for}} \quad n = 1,2,\ldots \end{cases}.$$

III. <u>The coefficient</u> $b_n^{(\alpha,\beta)}$ <u>of</u> t^{n-1} <u>in the polynomial</u> (1) <u>is</u>

$$b_n^{(\alpha,\beta)} = \begin{cases} 0 & \underline{\text{for}} \quad n = 0, \\ (-1)^{n-1}(\beta-\alpha)n \dfrac{\Gamma(2n+\alpha+\alpha)}{\Gamma(n+\alpha+\beta+1)}\, \alpha_n & \underline{\text{for}} \quad n = 1,2,\ldots \end{cases}$$

IV. <u>The norm of the polynomial</u> (1) <u>satisfies the formula</u>

$$\| y_n^{(\alpha,\beta)} \|^2_{L^2_{(1-t)^\alpha(1+t)^\beta}(-1,1)} = \begin{cases} 2^{\alpha+\beta+1} \dfrac{\Gamma(\alpha+1)\,\Gamma(\beta+1)}{\Gamma(\alpha+\beta+2)} \alpha_0^2 & \underline{\text{for}}\ n = 0, \\[2ex] \dfrac{2^{2n+\alpha+\beta+1}}{2n+\alpha+\beta+1} \dfrac{n!\ \Gamma(n+\alpha+1)\,\Gamma(n+\beta+1)}{\Gamma(n+\alpha+\beta+1)} \alpha_n^2 & \underline{\text{for}}\ n = 1,2,\ldots \end{cases}$$

<u>In particular, for the Tchebysheff polynomials</u> $(\alpha = \beta = -\frac{1}{2})$ <u>we have</u>

$$\| y_n^{(-\frac{1}{2},-\frac{1}{2})} \|^2_{L^2_{\frac{1}{\sqrt{1-t^2}}}(-1,1)} = \begin{cases} \pi\, \alpha_0^2 & \underline{\text{for}}\ n = 0, \\[2ex] \dfrac{\pi}{2^{2n+1}} \left[\dfrac{(2n)!}{n!} \right]^2 \alpha_n^2 & \underline{\text{for}}\ n = 1,2,\ldots \end{cases}$$

<u>For the conjugate Tchebysheff polynomials</u> $(\alpha = \beta = \frac{1}{2})$ <u>we have</u>

$$\| y_n^{(-\frac{1}{2},-\frac{1}{2})} \|^2_{L^2_{\frac{1}{\sqrt{1-t^2}}}(-1,1)} = \frac{\pi}{2^{2n+1}} \left[\frac{(2n+1)!}{(n+1)!} \right]^2 \alpha_n^2 \quad \underline{\text{for}}\ n = 0,1,\ldots$$

<u>Proof</u>. I. By 5.3, the Jacobi polynomials are orthogonal on $(-1,1)$ with respect to the weight function

(2) $\qquad w(t) = (1-t)^\alpha (1+t)^\beta \qquad \text{for} \qquad t \in (-1,1).$

By 6.3, w is a classical weight function, and using the notation 6.1 we have

(3) $\qquad w_1(t) = (\beta-\alpha) - (\beta+\alpha)t, \quad w_2(t) = 1-t^2 \qquad \text{for} \qquad t \in (-1,1),$

so that

(4) $\qquad w_{1,0} = \beta-\alpha, \quad w_{1,1} = -(\beta+\alpha), \quad w_{2,0} = 1, \quad w_{2,1} = 0, \quad w_{2,2} = -1.$

Consequently, by Rodriguez theorem 1., $y_n^{(\alpha,\beta)}$ is a Jacobi polynomial of degree n with the indices α,β if and only if, for some $0 \neq \alpha_n$ $(-\infty,+\infty)$.

$$(1) \qquad y_n^{(\alpha,\beta)} \overset{1.}{=} \alpha_n \frac{1}{w(t)} \left[w_2^n(t)\, w(t) \right]^{(n)} \overset{(2),(3)}{=} \alpha_n \frac{\left[(1-t)^{n+\alpha}(1+t)^{n+\beta} \right]^{(n)}}{(1-t)^{\alpha}(1+t)^{\beta}}$$

for all $t \in (-1,1)$ $(n = 0,1,\ldots)$.

II. By 2. and I., the coefficient $a_n^{(\alpha,\beta)}$ of t^n in the polynomial (1) is

$$a_n^{(\alpha,\beta)} \overset{2.,I.}{=} \alpha_0 \qquad \text{for } n = 0,$$

$$a_n^{(\alpha,\beta)} \overset{2.,I.}{=} \alpha_n \prod_{j=n+1}^{2n} (w_{1,1} + j\, w_{2,2}) \overset{(4)}{=} \alpha_n \overbrace{\prod_{j=n+1}^{2n} \left[-(\beta+\alpha)-j \right]}^{n \text{ factors}} = (-1)^n \alpha_n \prod_{j=n+1}^{2n} (\alpha+\beta+j) =$$

$$= (-1)^n \alpha_n \prod_{j=0}^{n-1} \left[\underbrace{(n+\alpha+\beta+1)}_{=x} + j \right] \overset{(2)\text{in}6.9}{=} (-1)^n \alpha_n \frac{\Gamma(\overbrace{2n+\alpha+\beta+1}^{=x+n})}{\Gamma(\underbrace{n+\alpha+\beta+1}_{=x})} \qquad \text{for } n = 1,2$$

III. By 2. and I., the coefficient $b_n^{(\alpha,\beta)}$ of t^{n-1} in the polynomial (1) is

$$b_n^{(\alpha,\beta)} \overset{2.,I.}{=} 0 \qquad \text{for } n = 0,$$

$$b_n^{(\alpha,\beta)} \overset{2.,I.}{=} n\, \alpha_n\, (w_{1,0} + n\, w_{2,1}) \overset{(4)}{=} (\beta-\alpha)\alpha_1 \qquad \text{for } n = 1,$$

$$b_n^{(\alpha,\beta)} \overset{2.,I.}{=} n\,\alpha_n\,(w_{1,0}+n\,w_{2,1}) \prod_{j=n+1}^{2n-1} (w_{1,1}+j\,w_{2,2}) \overset{(4)}{=} n\,\alpha_n(\beta-\alpha) \overbrace{\prod_{j=n+1}^{2n-1} [-(\beta+\alpha)-j]}^{n-1 \text{ factors}} =$$

$$= (-1)^{n-1}\,(\beta-\alpha)n\,\alpha_n \prod_{j=n+1}^{2n-1} (\alpha+\beta+j) = (-1)^{n-1}(\beta-\alpha)n\,\alpha_n \prod_{j=0}^{n-2} [\underbrace{(n+\alpha+\beta+1)}_{=x}+j] \overset{(2)\text{in}6.}{=}$$

$$\overset{(2)\text{in } 6.9}{=} (-1)^{n-1}\,(\beta-\alpha)n\,\alpha_n \frac{\Gamma(\overbrace{2n+\alpha+\beta}^{x+(n-1)})}{\Gamma(\underbrace{n+\alpha+\beta+1}_{=x})} \quad \text{for} \quad n = 2,3,\ldots$$

Since the second formula can be obtained from the third for $n = 1$ the statement follows.

IV. By 2. and I.,

$$(5) \qquad \| y_n^{(\alpha,\beta)} \|^2_{L^2_w(-1,1)} = (-1)^n\, n!\, \alpha_n\, a_n^{(\alpha,\beta)} \int_{-1}^{1} w_2^n(t)\, w(t)dt \quad \text{for} \quad n = 0,1,\ldots$$

By 6.10,

$$(6) \qquad \int_{-1}^{1} w_2^n(t)\, w(t)dt = 2^{2n+\alpha+\beta+1} \frac{\Gamma(n+\alpha+1)\,\Gamma(n+\beta+1)}{\Gamma(2n+\alpha+\beta+2)} \quad \text{for} \quad n = 0,1,\ldots$$

Hence

$$\| y_0^{(\alpha,\beta)} \|^2_{L^2_w(-1,1)} \overset{(5),\text{II.},(6)}{=} 2^{\alpha+\beta+1} \frac{\Gamma(\alpha+1)\,\Gamma(\beta+1)}{\Gamma(\alpha+\beta+2)}\, \alpha_0^2,$$

$$\| y_n^{(\alpha,\beta)} \|^2_{L^2_w(-1,1)} \overset{(5).\text{II.},(6)}{=} (-1)^n\, n!\, \alpha_n\, (-1)^n \alpha_n \frac{\Gamma(2n+\alpha+\beta+1)}{\Gamma(n+\alpha+\beta+1)}\, 2^{2n+\alpha+\beta+1} \frac{\Gamma(n+\alpha+1)\Gamma(n+\beta+1)}{\Gamma(2n+\alpha+\beta+2)}$$

$$\overset{(2)\text{in}6.9}{=} 2^{2n+\alpha+\beta+1} \frac{\Gamma(2n+\alpha+\beta+1)}{\Gamma(n+\alpha+\beta+1)} \frac{n!\,\Gamma(n+\alpha+1)\,\Gamma(n+\beta+1)}{(2n+\alpha+\beta+1)\,\Gamma(2n+\alpha+\beta+1)}\, \alpha_n^2 =$$

$$= \frac{2^{2n+\alpha+\beta+1}}{2n+\alpha+\beta+1} \frac{n!\,\Gamma(n+\alpha+1)\,\Gamma(n+\beta+1)}{\Gamma(n+\alpha+\beta+1)}\, \alpha_n^2 \quad \text{for} \quad n = 1,2,\ldots$$

In particular, for the Tchebysheff polynomials $(\alpha=\beta=-\frac{1}{2})$ we have by 6.10

$$(7)\qquad \int_{-1}^{1} w_2^n(t)\, w(t)dt = \frac{1}{4^n}\binom{2n}{n}\pi = \frac{1}{4^n}\frac{(2n)!}{(n!)^2}\pi \qquad \text{for } n = 0,1,\ldots$$

Hence

$$\| y_0^{(-\frac{1}{2},-\frac{1}{2})} \|^2_{L^2_{\frac{1}{\sqrt{1-t^2}}}(-1,1)} \overset{(5),\mathrm{II.},(7)}{=} \pi\,\alpha_0^2,$$

$$\| y_n^{(-\frac{1}{2},-\frac{1}{2})} \|^2_{L^2_{\frac{1}{\sqrt{1-t^2}}}(-1,1)} \overset{(5),\mathrm{II.},(7)}{=} (-1)^n\, n!\, \alpha_n\, (-1)^n \frac{\Gamma(2n)}{\Gamma(n)}\alpha_n \frac{1}{4^n}\frac{(2n)!}{(n!)^2}\pi \overset{(3)\text{in}6}{=}$$

$$\overset{(3)\text{in}6.9}{=} \frac{1}{4^n}\, n!\, \frac{(2n-1)!}{(n-1)!}\,\frac{(2n)!}{(n!)^2}\,\pi\,\alpha_n^2 = \frac{\pi}{2^{2n+1}}\left[\frac{(2n)!}{n!}\right]^2 \alpha_n^2 \qquad \text{for } n = 1,2,\ldots .$$

For the conjugate Tchebysheff polynomials $(\alpha = \beta = \frac{1}{2})$ we have by 6.10

$$(8)\qquad \int_{-1}^{1} w_2^n(t)\, w(t)dt = \frac{1}{4^{n+1}}\binom{2n+2}{n+1}\pi \qquad (n = 0,1,\ldots).$$

Therefore

$$\| y_0^{(\frac{1}{2},\frac{1}{2})} \|^2_{L^2_{\sqrt{1-t^2}}(-1,1)} \overset{(5),\mathrm{II.},(8)}{=} \alpha_0\,\alpha_0\,\frac{1}{4}\,\frac{2}{1}\,\pi = \frac{1}{2}\pi\,\alpha_0^2,$$

$$\| y_n^{(\frac{1}{2},\frac{1}{2})} \|^2_{L^2_{\sqrt{1-t^2}}(-1,1)} \overset{(5),\mathrm{II.},(8)}{=} (-1)^n\, n!\, \alpha_n\, (-1)^n \frac{\Gamma(2n+2)}{\Gamma(n+2)}\alpha_n \frac{1}{4^{n+1}}\binom{2n+2}{n+1}\pi =$$

$$= n!\,\frac{(2n+1)!}{(n+1)!}\,\frac{1}{4^{n+1}}\,\frac{(2n+2)!}{[(n+1)!]^2}\,\pi\,\alpha_n^2 = \frac{n!(2n+1)!}{(n+1)n!}\,\frac{1}{2^{2n+2}}\,\frac{(2n+2)(2n+1)!}{[(n+1)!]^2}\,\pi\,\alpha_n^2 =$$

$$= \frac{\pi}{2^{2n+1}}\left[\frac{(2n+1)!}{(n+1)!}\right]^2 \alpha_n^2 \qquad \text{for } n = 1,2,\ldots .$$

Hence the last formula follows.

4. Theorem. Let $\alpha \in (-1,+\infty)$. Then the following holds:

I. $y_n^{(\alpha)}$ is a Laguerre polynomial of degree n with index α if and only if there exists $0 \neq \alpha_n \in (-\infty,+\infty)$ such that

$$(1) \qquad y_n^{(\alpha)}(t) = \alpha_n \frac{(t^{n+\alpha}e^{-t})^{(n)}}{t^{\alpha}e^{-t}} \qquad \text{for all } t \in (0,+\infty)$$

$(n = 0,1,\ldots)$.

II. The coefficient of t^n in the polynomial (1) is $a_n^{(\alpha)} = (-1)^n \alpha_n$ for $n = 0,1,\ldots$.

III. The coefficient of t^{n-1} in the polynomial (1) is $b_n^{(\alpha)} = (-1)^{n-1} n(n+\alpha)\alpha_n$ for $n = 0,1,\ldots$.

IV. The norm of the polynomial (1) satisfies the formula

$$\| y_n^{(\alpha)} \|^2_{L^2_{t^{\alpha}e^{-t}}(0,+\infty)} = n!\, \Gamma(n+\alpha+1)\, \alpha_n^2 \quad (n = 0,1,\ldots).$$

Proof. I. By 5.3, the Laguerre polynomials with index $\alpha \in (-1,+\infty)$ are orthogonal on $(0,+\infty)$ with respect to the weight function

$$(2) \qquad w(t) = t^{\alpha}e^{-t} \qquad \text{for } t \in (0,+\infty).$$

By 6.3, w is a classical weight function on $(0,+\infty)$, and using the notation of 6.1, we have

$$(3) \qquad w_1(t) = \alpha - t, \quad w_2(t) = t \qquad \text{for } t \in (0,+\infty).$$

so that

(4) $$w_{1,0} = \alpha_1 \quad w_{1,1} = -1, \quad w_{2,0} = 0, \quad w_{2,1} = 1, \quad w_{2,2} = 0.$$

Consequently, by Rodriguez theorem 1., $y_n^{(\alpha)}$ is a Laguerre polynomial of degree n with index α if and only if, for some $0 \neq \alpha_n \in (-\infty, +\infty)$,

(1) $$y_n^{(\alpha)}(t) \overset{1.}{=} \alpha_n \frac{1}{w(t)} \left[w_2^n(t)\, w(t) \right]^{(n)} \overset{(2),(3)}{=} \alpha_n \frac{\left[t^{n+\alpha} e^{-t} \right]^{(n)}}{t^{\alpha} e^{-t}}$$

for all $t \in (0, +\infty)$, $n = 0, 1, \ldots$.

II. By 2. and I., the coefficient $a_n^{(\alpha)}$ of t^n in the polynomial (1) is

$$a_n^{(\alpha)} \overset{2.,I.}{=} \alpha_0 \qquad \text{for} \quad n = 0,$$

$$a_n^{(\alpha)} \overset{2.,I.}{=} \alpha_n \prod_{j=n+1}^{2n} (w_{1,1} + j\, w_{2,2}) \overset{(4)}{=} \alpha_n \overbrace{\prod_{j=n+1}^{2n} (-1 + j.0)}^{n \text{ factors}} = (-1)^n \alpha_n$$

for $n = 1, 2, \ldots$

so that $a_n^{(\alpha)} = (-1)^n \alpha_n$ for $n = 0, 1, \ldots$.

III. By 2. and I., the coefficient $b_n^{(\alpha)}$ of t^{n-1} in the polynomial (1) is

$$b_n^{(\alpha)} \overset{2.,I.}{=} 0 \quad \text{for} \quad n = 0,$$

$$b_n^{(\alpha)} \overset{2.,I.}{=} n\, \alpha_n\, (w_{1,0} + n\, w_{2,1}) = (\alpha+1)\alpha_1 \qquad \text{for} \quad n = 1,$$

$$b_n^{(\alpha)} \overset{2.,I.}{=} n\,\alpha_n\,(w_{1,0}+n\,w_{2,1}) \prod_{j=n+1}^{2n-1} (w_{1,1}+j\,w_{2,2}) \overset{(4)}{=}$$

$$= n\,\alpha_n(n+\alpha) \overbrace{\prod_{j=n+1}^{2n-1} (-1+j.0)}^{n-1 \text{ factors}} = (-1)^{n-1}\,n(n+\alpha)\,\alpha_n \quad \text{for} \quad n = 2,3,\ldots$$

so that $b_n^{(\alpha)} = (-1)^{n-1}\,n(n+\alpha)\alpha_n$ for $n = 0,1,\ldots$.

IV. By 2., I., II. and 6.11,

$$\| y_n^{(\alpha)} \|^2_{L^2_{t^\alpha e^{-t}}(0,+\infty)} \overset{2.,I.}{=} (-1)^n\,n!\,\alpha_n\,a_n^{(\alpha)} \int_0^{+\infty} w_2^n(t)\,w(t)dt \overset{II.,6.11}{=}$$

$$\overset{II.,6.11}{=} (-1)^n\,n!\,\alpha_n\,(-1)^n\,\alpha_n\,\Gamma(n+\alpha+1) = n!\,\Gamma(n+\alpha+1)\,\alpha_n^2 \quad \text{for} \quad n = 0,1,\ldots.$$

which completes the proof.

<u>5. Theorem</u>. I. y_n <u>is a Hermite polynomial of degree</u> n <u>if and only if there exists</u> $0 \neq \alpha_n \in (-\infty,+\infty)$ <u>such that</u>

(1) $$y_n(t) = \alpha_n \frac{(e^{-t^2})^{(n)}}{e^{-t^2}} \quad \underline{\text{for all}} \quad t \in (-\infty,+\infty)$$

$(n = 0,1,\ldots)$.

II. <u>The coefficient</u> a_n <u>of</u> t^n <u>in the polynomial</u> (1) <u>is</u> $a_n = (-1)^n\,2^n\,\alpha_n$ $(n = 0,1,\ldots)$.

III. <u>The coefficient</u> b_n <u>of</u> t^{n-1} <u>in the polynomial</u> (1)

<u>is</u> $b_n = 0 \quad (n = 0,1,\ldots)$.

IV. <u>The norm of the polynomial</u> (1) <u>satisfies the formula</u>

$$\| y_n \|^2_{L^2_{e^{-t^2}}(-\infty,+\infty)} = 2^n\, n!\ \alpha_n^2 \sqrt{\pi} \quad (n + 0,1,\ldots).$$

<u>Proof</u>. I. By 5.3, the Hermite polynomials are orthogonal on the interval $(-\infty,+\infty)$ with respect to the weight function

(2) $$w(t) = e^{-t^2} \qquad \text{for} \quad t \in (-\infty,+\infty).$$

By 6.3, w is u classical weight function on $(-\infty,+\infty)$, and using the notation in 6.1, we have

(3) $$w_1(t) = -2t, \quad w_2(t) = 1 \qquad \text{for} \quad t \in (-\infty,+\infty).$$

so that

(4) $$w_{1,0} = 0, \quad w_{1,1} = -2, \quad w_{2,0} = 1, \quad w_{2,1} = w_{2,2} = 0.$$

Consequently, by Rodriguez theorem 1., y_n is a Hermite polynomial of degree n if and only if, for some $0 \neq \alpha_n \in (-\infty,+\infty)$.

(1) $$y_n(t) \overset{1.}{=} \alpha_n \frac{1}{w(t)} \left[w_2^n(t)\, w(t) \right]^{(n)} = \alpha_n \frac{(e^{-t^2})^{(n)}}{e^{-t^2}} \qquad \text{for all}$$

$t \in (-\infty,+\infty), \quad n = 0,1,\ldots$.

II. By 2. and I., the coefficient a_n of t^n in the polynomial (1) is

$$a_n \overset{2.,I.}{=} \alpha_0 \qquad \text{for } n = 0,$$

$$a_n \overset{2.,I.}{=} \alpha_n \prod_{j=n+1}^{2n} (w_{1,1} + j\, w_{2,2}) \overset{(4)}{=} \alpha_n \overbrace{\prod_{j=n+1}^{2n} (-2 + j.0)}^{n \text{ factors}} = (-1)^n\, 2^n\, \alpha_n$$

$$\text{for } n = 1,2,\ldots,$$

so that $a_n = (-1)^n\, 2^n\, \alpha_n$ for $n = 0,1,\ldots$.

III. By 2. and I., the coefficient b_n of t^n in the polynomial y_n is $b_n = 0$ for $n = 0$, $b_n = n\, \alpha_n\, (w_{1,0} + n\, w_{2,1})$ for $n = 1$,

$$b_n = n\, \alpha_n\, (w_{1,0} + n\, w_{2,1}) \prod_{j=n+1}^{2n-1} (w_{1,1} + j\, w_{2,2}) \quad \text{for } n = 2,3,\ldots \ .$$

Using (4) we obtain $b_n = 0$ for $n = 0,1,\ldots$. The same result follows from 5.5.

IV. By 2., I., II. and 6.12

$$\| y_n \|^2_{L^2_n(-\infty,+\infty)} \overset{2.,I.}{=} (-1)^n\, n!\, \alpha_n\, a_n \int_{-\infty}^{+\infty} w_2^n(t)\, w(t)dt \overset{II.,6.12}{=}$$

$$\overset{II.,6.12}{=} (-1)^n\, n!\, \alpha_n\, (-1)^n\, 2^n\, \alpha_n\, \sqrt{\pi} = 2^n\, n!\, \alpha_n^2\, \sqrt{\pi} \qquad \text{for } n = 0,1,\ldots,$$

which completes the proof.

<u>6. Remarks</u>. Rodriguez proved his theorem only for the Legendre polynomials. Later analogous formulae were successively proved for the Jacobi, Tchebysheff, Laguerre and Hermite polynomials. These separate proofs are presented e.g. in Szegö (14).

The first unified proof of the Rodriguez formula for all the classical orthogonal polynomials was given by Tricomi in (15), pp. 129-133. Tricomi's formulation is more complicated than ours, and his proof is different. However using the results in 6.6 it is not difficult to prove that Tricomi's theorem and 1. are equivalent.

In Czechoslovakia it was mentioned to me that **results the same as or similar to those** in 2. had possibly already been discovered by a Russian mathematician **Adamaroff** or Adamarovitch. However, I have not been able to find any such publication on this subject in the Russian journals from 1945 on, and the older issues were not available. With this reservation the result in 2. seems to be new.

Cryer recently proved in (20) that assuming 1), 2) and II. as in 1. the polynomials y_n $(n = 0,1,\ldots)$ may be obtained from those of Jacobi, Laguerre or Hermite by a linear transformation of the independent variable. This result immediately follows from our theorems in 1. and 6.6.

Engelis (22) recently derived the Rodriguez formula from the differential equation in 7.1.

§ 10. The standard orthogonal polynomials

1. Definition. Let $\alpha,\beta \in (-1,+\infty)$. Then choosing

$$\alpha_n = \frac{(-1)^n}{2^n\, n!} \quad (n = 0,1,\ldots) \tag{1}$$

in the Rodriguez formula 9.3 for the Jacobi polynomials of degree n with indices α,β we obtain the standard Jacobi polynomials $P_n^{(\alpha,\beta)}$ of degree n with indices α,β $(n = 0,1,\ldots)$.

2. Theorem. Let $\alpha,\beta \in (-1,+\infty)$. Then the standard Jacobi polynomials $P_n^{(\alpha,\beta)}$ of degree n with indices α,β have the following properties:

I. $$P_n^{(\alpha,\beta)}(t) = \frac{(-1)^n}{2^n\, n!}\, \frac{\left[(1-t)^{n+\alpha}(1+t)^{n+\beta}\right]^{(n)}}{(1-t)^{\alpha}(1+t)^{\beta}} \quad \text{for all } t \in (-1,1), n = 0,1$$

II. The coefficient $a_n^{(\alpha,\beta)}$ of t^n in $P_n^{(\alpha,\beta)}$ is

$$a_n^{(\alpha,\beta)} = \begin{cases} 1 & \text{for } n = 0, \\ \dfrac{1}{2^n\, n!}\, \dfrac{\Gamma(2n+\alpha+\beta+1)}{\Gamma(n+\alpha+\beta+1)} & \text{for } n = 1,2,\ldots \end{cases}$$

III. The coefficient $b_n^{(\alpha,\beta)}$ of t^{n-1} in $P_n^{(\alpha,\beta)}$ is

$$b_n^{(\alpha,\beta)} = \begin{cases} 0 & \underline{\text{for}} \quad n = 0, \\ (\alpha-\beta)\dfrac{1}{2^n\,(n-1)!}\,\dfrac{\Gamma(2n+\alpha+\beta+1)}{\Gamma(n+\alpha+\beta+1)} & \underline{\text{for}} \quad n = 1,2,\ldots \end{cases}$$

IV. <u>The norm of</u> $P_n^{(\alpha,\beta)}$ <u>satisfies the formula</u>

$$\| P_n^{(\alpha,\beta)} \|^2_{L^2_{(1-t)^\alpha(1+t)^\alpha}(-1,1)} = \begin{cases} 2^{\alpha+\beta+1}\,\dfrac{\Gamma(\alpha+1)\,\Gamma(\beta+1)}{\Gamma(\alpha+\beta+2)} & \underline{\text{for}} \quad n = 0, \\ \dfrac{2^{\alpha+\beta+1}}{2n+\alpha+\beta+1}\,\dfrac{\Gamma(n+\alpha+1)\,\Gamma(n+\beta+1)}{n!\,\Gamma(n+\alpha+\beta+1)} & \underline{\text{for}} \quad n = 1,2,\ldots \end{cases}$$

<u>Proof</u>. Easily follows by setting (1) in the fomulae in 9.3.

<u>3. Theorem</u>. <u>The standard Legendre polynomials</u> $P_n = P_n^{(0,0)}$ <u>of degree</u> n <u>have the following properties</u>:

I. $P_n(t) = \dfrac{(-1)^n}{2^n\,n!}\left[(1-t^2)^n\right]^{(n)}$ <u>for all</u> $t \in (-1,1)$, $n = 0,1,\ldots$

II. <u>The coefficient of</u> t^n <u>in</u> P_n <u>is</u> $a_n = \dfrac{(2n)!}{2^n(n!)^2}$ <u>for</u> $n = 0,1,\ldots$

III. <u>The coefficient of</u> t^{n-1} <u>in</u> P_n <u>is</u> $b_n = 0$ <u>for</u> $n = 0,1,\ldots$

IV. <u>The norm of</u> P_n <u>satisfies the formula</u> $\| P_n \|^2_{L^2(-1,1)} = \dfrac{2}{2n+1}$ <u>for</u> $n = 0,1,\ldots$.

<u>Proof</u> Easily follows by setting $\alpha = \beta = 0$ in the formulae in 2., and using the formulae in 6.9 for the function Γ .

4. Definition. Choosing

(2) $$\alpha_n = (-1)^n\, 2^n \frac{n!}{(2_n)!} \qquad \text{for } n = 0,1,\ldots$$

in the Rodriguez formula 9.3 for the Jacobi polynomials of degree n with indices $\alpha = \beta = -\frac{1}{2}$ we obtain the standard Tchebysheff polynomials T_n of degree n $(n = 0,1,\ldots)$.

5. Theorem. Let $P_n^{(-\frac{1}{2})} = P_n^{(-\frac{1}{2},\,-\frac{1}{2})}$ and T_n be the standard Gegenbauer polynomials of degree n with index $-\frac{1}{2}$, and the standard Tchebysheff polynomial of degree n respectively $(n = 0,1,\ldots)$. Then

$$P_n^{(-\frac{1}{2})}(t) = \frac{1}{4^n}\binom{2n}{n} T_n(t) \qquad \text{for all } t \quad (n = 0,1,\ldots).$$

Proof Easily follows from 1. and 4.

6. Theorem. The standard Tchebysheff polynomials T_n of degree n have the following properties:

I. $$T_n(t) = (-1)^n\, 2^n \frac{n!}{(2n)!} \sqrt{1-t^2}\, \left[(1-t^2)^{n-\frac{1}{2}}\right]^{(n)} \qquad \text{for all}$$

$$t \in (-1,1), \quad n = 0,1,\ldots .$$

II. The coefficient a_n of t^n in T_n is

$$a_n = \begin{cases} 1 & \text{for} \quad n = 0, \\ 2^{n-1} & \text{for} \quad n = 1,2,\ldots . \end{cases}$$

III. The coefficient b_n of t^{n-1} in T_n is $b_n = 0$ for $n = 0,1,\ldots$.

IV. The norm of T_n satisfies the formula

$$\| T_n \|^2_{L^2_{\frac{1}{\sqrt{1-t^2}}}(-1,1)} = \begin{cases} \pi & \text{for } n = 0, \\ \frac{1}{2}\pi & \text{for } n = 1,2,\ldots . \end{cases}$$

Proof easily follows by setting $\alpha = \beta = -\frac{1}{2}$ and (2) of 4. in the formulae in 9.3, and using formulae 6.9 for the function Γ.

7. Definition. Choosing

(3) $$\alpha_n = (-1)^n 2^n \frac{(n+1)!}{(2n+1)!} \quad \text{for} \quad n = 0,1,\ldots$$

in the Rodriguez formula 9.3 for the Jacobi polynomials of degree n with indices $\alpha = \beta = \frac{1}{2}$ we obtain the standard conjugate Tchebysheff polynomials U_n of degree n $(n = 0,1,\ldots)$.

8. Theorem. Let $P_n^{(\frac{1}{2})} = P_n^{(\frac{1}{2},\frac{1}{2})}$ and U_n be the standard Gegenbauer polynomials of degree n, and the standard conjugate Tchebysheff polynomials of degree n respectively $(n = 0,1,\ldots)$. Then

$$P_n^{(\frac{1}{2})}(t) = \frac{1}{4^n}\binom{2n+1}{n} U_n(t) \quad \text{for all } t \quad (n = 0,1,\ldots).$$

Proof easily follows from 1. and 7.

9. Theorem. The standard conjugate Tchebysheff polynomials U_n of degree n have the following properties:

I. $$U_n(t) = (-1)^n 2^n \frac{(n+1)!}{(2n+1)!} \frac{1}{\sqrt{1-t^2}} \left[(1-t^2)^{n+\frac{1}{2}}\right]^{(n)}$$

<u>for</u> $t \in (-1,1)$, $n = 0,1,\ldots$.

II. <u>The coefficient</u> a_n <u>of</u> t^n <u>in</u> U_n <u>is</u> $a_n = 2^n$ $(n = 0,1,\ldots)$.

III. <u>The coefficient</u> b_n <u>of</u> t^{n-1} <u>in</u> U_n <u>is</u> $b_n = 0$ $(n = 0,1,\ldots)$.

IV. <u>The norm of</u> U_n <u>satisfies the formula</u> $\|U_n\|^2_{L^2_{\sqrt{1-t^2}}(-1,1)} = \frac{1}{2}\pi$ $(n = 0,1,\ldots)$.

<u>Proof</u> Easily follows by setting $\alpha = \beta = \frac{1}{2}$ and (3) of 7. into the formulae in 9.3, and using formulae 6.9 for the function Γ .

<u>10. Definition</u>. <u>Let</u> $\alpha \in (-1, +\infty)$. <u>Then choosing</u>

(4) $$\alpha_n = (-1)^n \quad (n = 0,1,\ldots)$$

<u>in the Rodriguez formula</u> 9.4 <u>for the Laguerre polynomials of degree</u> n <u>with index</u> α <u>we obtain the standard Laguerre polynomials</u> $L_n^{(\alpha)}$ <u>of degree</u> n <u>with index</u> α $(n = 0,1,\ldots)$.

<u>11. Theorem</u>. <u>Let</u> $\alpha \in (-1,+\infty)$. <u>Then the standard Laguerre polynomials</u> $L_n^{(\alpha)}$ <u>of degree</u> n <u>with index</u> α <u>have the following properties</u>:

I. $$L_n^{(\alpha)}(t) = (-1)^n \frac{(t^{n+\alpha}e^{-t})^{(n)}}{t^{\alpha}e^{-t}}$$ <u>for all</u> $t \in (0,+\infty)$, $n = 0,1,\ldots$.

II. The coefficient $a_n^{(\alpha)}$ of t^n in $L_n^{(\alpha)}$ is $a_n^{(\alpha)} = 1$ for $n = 0,1,\ldots$

III. The coefficient $b_n^{(\alpha)}$ of t^{n-1} in $L_n^{(\alpha)}$ is $b_n^{(\alpha)} = -n(n+\alpha)$ for $n = 0,1,\ldots$.

VI. The norm of $L_n^{(\alpha)}$ satisfies the formula $\| L_n^{(\alpha)} \|^2_{L^2_{t^\alpha e^{-t}}(0,+\infty)} = n!\,\Gamma(n+\alpha+1)$ for $n = 0,1,\ldots$.

Proof Easily follows by setting (4) into formulae 9.4.

12. Definition. Choosing

(5) $$\alpha_n = (-1)^n \quad (n = 0,1,\ldots)$$

in the Rodriguez formula 9.5 for the Hermite polynomials of degree n we obtain the standard Hermite polynomials H_n of degree n $(n = 0,1,\ldots)$.

13. Theorem. The standard Hermite polynomials H_n of degree n have the following properties:

I. $H_n(t) = (-1)^n \dfrac{(e^{-t^2})^{(n)}}{e^{-t^2}}$ for all $t \in (-\infty,+\infty)$, $n = 0,1,\ldots$.

II. The coefficient a_n of H_n at t^n is $a_n = 2^n$ for $n = 0,1,\ldots$.

III. The coefficient b_n of H_n at t^{n-1} is $b_n = 0$ for $n = 0,1,\ldots$.

IV. The norm of H_n satisfies the formula $\| H_n \|^2_{L^2_{e^{-t^2}}(-\infty,+\infty)} = 2^n\, n!\, \sqrt{\pi}$ for $n = 0,1,\ldots$.

Proof Easily follows by setting (5) into formulae 9.5.

§ 11. The recurrence formulae for orthogonal polynomials

1. Theorem. Suppose:

1) I is a subinterval of $(-\infty,+\infty)$ with the terminal points a,b such that $-\infty \leq a < b \leq +\infty$.

2) $0 < w(t) < +\infty$ a.e. in (a,b).

3) $\int_a^b t^k w(t)dt$ is finite for all $k = 0,1,\ldots$.

4) $\tilde{y}_k$ is a real polynomial of degree k with leading coefficient 1 $(k = 0,1,\ldots)$.

5) $\tilde{y}_0,\tilde{y}_1,\ldots$ is an orthogonal system on I with respect to w.

The the following statements hold:

I. There exist real numbers $\alpha_1,\alpha_2,\ldots$ and $\beta_1,\beta_2,\ldots$ such that

$$\tilde{y}_{n+1}(t) = (t-\alpha_n)\tilde{y}_n(t) - \beta_n\tilde{y}_{n-1}(t) \quad \text{for all } t \in K,\ n = 1,2,\ldots$$

II. Defining $\tilde{y}_{-1}(t) = 1$ for all $t \in K$, I. is true also for $n = 0$.

III. $$\alpha_n = \frac{1}{\|\tilde{y}_n\|_2^2} \int_a^b t\,\tilde{y}_n^2(t)\,w(t)dt \quad \text{for } n = 1,2,\ldots .$$

IV. $\alpha_n \in (a,b)$ <u>for</u> $n = 1,2,\ldots$.

V. $\beta_n = \dfrac{\|\tilde{y}_n\|_2^2}{\|\tilde{y}_{n-1}\|_2^2}$ <u>for</u> $n = 1,2,\ldots$.

VI. $0 < \beta_n \leq [\max(|a|,|b|)]^2$ <u>for</u> $n = 1,2,\ldots$.

<u>Proof</u> I. By 4), $\tilde{y}_{n+1}(t) - t\,\tilde{y}_n(t)$ is a real polynomial of degree $\leq n$, and therefore, by (v) and (vi) in 5.2, a linear combination of $\tilde{y}_0(t), \tilde{y}_1(t),\ldots, \tilde{y}_n(t)$ with real coefficients $c_{n,0}, c_{n,1},\ldots,c_{n,n}$, i.e.

(2) $$\tilde{y}_{n+1}(t) - t\,\tilde{y}_n(t) = \sum_{i=0}^{n} c_{n,i}\,\tilde{y}_i(t) \qquad \text{for all } t \in K,\ n = 1,2,\ldots$$

If $n = 1$ the formula (2) can be written in the form (1). Let $n \geq 2$. Multiplying (2) successively by $\tilde{y}_k(t)\,w(t)$ $(k = 0,1,\ldots,n-2)$ and integrating from a to b we obtain by 4) and 5)

(3) $$-\int_a^b t\tilde{y}_k(t)\,\tilde{y}_n(t)\,w(t)\,dt = c_{n,k}\int_a^b \tilde{y}_k^2(t)\,w(t)dt \quad (k = 0,1,\ldots,n-2).$$

The polynomial $t\tilde{y}_k(t)$ is of degree $k+1 \leq (n-2)+1 = n-1$ for $k = 0,1,\ldots,n-2$, and therefore, by (v) and (vi) in 5.2, a linear combination of $\tilde{y}_0(t), \tilde{y}_1(t),\ldots\tilde{y}_{n-1}(t)$ Consequently, by 5), the left-hand side of (3) is zero. Since, by 4), the integral on the right-hand side of (3) is positive it follows that

(4) $$c_{n,k} = 0 \qquad (k = 0,1,\ldots,n-2)\ .$$

Setting (4) into (2) we again obtain (1).

II. is obvious .

III. Multiplying (1) by $\tilde{y}_n(t)\, w(t)$ and integrating from a to b we obtain by 5)

$$0 \overset{5)}{=} \int_a^b (t-\alpha_n)\, \tilde{y}_n^2(t)\, w(t)dt = \int_a^b t\, \tilde{y}_n^2(t)\, w(t)dt - \alpha_n \| \tilde{y}_n \|_2^2 \quad \text{for } n = 1,2,\ldots$$

whence the formula in IV. follows.

IV. follows from III. and the obvious inequality for the numerator in IV., namely

$$a \int_a^b \tilde{y}_{n+1}^2(t)\, w(t)dt < \int_a^b t\, \tilde{y}_{n+1}^2(t)\, w(t)dt < b \int_a^b \tilde{y}_{n+1}^2(t)\, w(t)\, dt \quad (n = 1,2,\ldots$$

V. Multiplying (1) by $\tilde{y}_{n-1}^2(t)\, w(t)$ and integrating from a to b we obtain by 5)

$$(6) \qquad \int_a^b t\, \tilde{y}_{n-1}(t)\, \tilde{y}_n(t)\, w(t)dt = \beta_n \int_a^b \tilde{y}_{n-1}^2(t)\, w(t)dt = \beta_n \| \tilde{y}_{n-1}^2 \|_2^2 \quad (n = 1,2,\ldots$$

By 4), $t\, \tilde{y}_{n-1}(t)$ is a polynomial of degree n, and therefore by (v) and (vi) in 5.2, a linear combination of $\tilde{y}_0(t), \tilde{y}_1(t), \ldots, \tilde{y}_n(t)$, say $t\tilde{y}_{n-1}(t) =$

$= \sum_{k=0}^{n} c_{n-1,k}\, \tilde{y}_k(t)$ for all $t \in K$, $n = 1,2,\ldots$. Comparing the coefficient of t^n on both sides we obtain, by 4), $1 = c_{n-1,n}$ for $n = 1,2,\ldots$ Hence

(7) $$t\tilde{y}_{n-1}(t) = \sum_{k=0}^{n-1} c_{n-1,k}\,\tilde{y}_k(t) + \tilde{y}_n(t) \qquad \text{for all} \quad t \in K,\ n = 1,2,\ldots$$

so that

(8) $$\begin{cases} \displaystyle\int_a^b t\tilde{y}_{n-1}(t)\,\tilde{y}_n(t)\,w(t)dt \overset{(7)}{=} \int_a^b \Big[\sum_{k=0}^{n-1} c_{n-1,k}\,\tilde{y}_k(t) + \tilde{y}_n(t)\Big]\,\tilde{y}_n(t)\,w(t)dt \\ \displaystyle \overset{5)}{=} \int_a^b \tilde{y}_n^2(t)\,w(t)dt = \|\tilde{y}_n\|_2^2 \qquad \text{for} \quad n = 1,2,\ldots . \end{cases}$$

But (6) and (8) imply V.

VI. From V. it follows immediately that

(9) $$\beta_n > 0 \qquad (n = 1,2,\ldots).$$

Set

(10) $$M = \max\,(|a|,|b|).$$

Then, by 8), 2), (10) and 3.6,

$$\|\tilde{y}_n\|_2^2 = \int_a^b \tilde{y}_n^2(t)\,w(t)\,dt \overset{2)}{=} \left|\int_a^b \tilde{y}_n^2(t)\,w(t)dt\right| \overset{(8)}{=}$$

$$\overset{(8)}{=} \left|\int_a^b t\tilde{y}_{n-1}(t)\,\tilde{y}_n(t)\,w(t)dt\right| \overset{2)}{\leq} \int_a^b |t|\,\left|\tilde{y}_{n-1}(t)\tilde{y}_n(t)\right| w(t)\,dt \overset{(10)}{\leq}$$

$$\overset{(10)}{=} M \int_a^b \left|\tilde{y}_{n-1}(t)\,\tilde{y}_n(t)\right| w(t)\,dt \overset{\text{Hölder 3.6}}{\leq}$$

$$\overset{\text{Holder 3.6}}{=} M\left[\int_a^b \tilde{y}_{n-1}^2(t)w(t)dt\right]^{\frac{1}{2}} \left[\int_a^b \tilde{y}_n^2(t)\,w(t)dt\right]^{\frac{1}{2}} =$$

$$= M\,\|\tilde{y}_{n-1}\|_2\,\|\tilde{y}_n\|_2 \qquad (n = 1,2,\ldots).$$

Dividing both sides by $\|\tilde{y}_{n-1}\|_2 \|\tilde{y}_n\|_2 \overset{4)}{>} 0$ we obtain from (9), V., (11) and (10)

$$0 \overset{(9)}{<} \beta_n^{\frac{1}{2}} \overset{V.}{=} \frac{\|\tilde{y}_n\|_2^2}{\|\tilde{y}_{n-1}\|_2^2} \overset{(11)}{\leq} M \overset{(10)}{\leq} \max(|a|,|b|) \quad (n = 1,2,\ldots),$$

which proves VI.

2. Theorem. Suppose:

1) I is a subinterval of $(-\infty,+\infty)$ with terminal points a,b such that $-\infty \leq a < b \leq +\infty$.

2) $0 < w(t) < +\infty$ a.e. in (a,b).

3) $\int_a^b t^k w(t)dt$ is finite for all $k = 0,1,\ldots$

4) y_k is a real polynomial of degree k with coefficients a_k and b_k of t^k and t^{k-1} respectively $(k = 0,1,\ldots)$.

5) $y_0, y_1, \ldots$ is an orthogonal system on I with respect to w.

Then the following recurrence formula holds:

$$\frac{a_n}{a_{n+1}} y_{n+1}(t) = \left(x + \frac{b_{n+1}}{a_{n+1}} - \frac{b_n}{a_n}\right) y_n(t) - \frac{a_{n-1}}{a_n} \frac{\|y_n\|_2^2}{\|y_{n-1}\|_2^2} y_{n-1}(t) \tag{1}$$

for all $t \in K$, $n = 1,2,\ldots$.

Proof. Set

$$\tilde{y}_k(t) = \frac{1}{a_k} y_k(t) \qquad \text{for all } t \in K,\ k = 0,1,\ldots . \tag{2}$$

By 4), $\tilde{y}_k$ is a real polynomial of degree k with coefficients

(3) $$\tilde{a}_k = 1, \quad \tilde{b}_k = \frac{b_k}{a_k} \quad \text{of} \quad t^k,\ t^{k-1} \quad \text{respectively} \quad (k = 0,1,\ldots),$$

and with norm satisfying the relation

(4) $$\|\tilde{y}_k\|_2^2 = \frac{1}{a_k^2}\|y_k\|_2^2 \quad (k = 0,1,\ldots).$$

By 5), $\tilde{y}_0, \tilde{y}_1, \ldots$ is an orthonormal system on I with respect to w.

Consequently, by I. in 1., there exist real numbers $\alpha_1, \alpha_2, \ldots$ and $\beta_1, \beta_2, \ldots$ such that

(5) $$\tilde{y}_{n+1}(t) = (t-\alpha_n)\,\tilde{y}_n(t) - \beta_n \tilde{y}_{n-1}(t) \qquad \text{for all} \quad t \in K,\ n = 1,2,\ldots \ .$$

Comparing the coefficients of t^n on both sides of (5) we obtain $\tilde{b}_{n+1} = \tilde{b}_n - \alpha_n$ for $n = 1,2,\ldots,$ whence

(6) $$\alpha_n = \tilde{b}_n - \tilde{b}_{n+1} \quad (n = 1,2,\ldots).$$

Next, by V. in 1.,

(7) $$\beta_n = \frac{\|\tilde{y}_n\|_2^2}{\|\tilde{y}_{n-1}\|_2^2} \quad (n = 1,2,\ldots).$$

Setting (6) and (7) into (5) we have the recurrence formula

$$(8) \qquad \tilde{y}_{n+1}(t) = (t + \tilde{b}_{n+1} - \tilde{b}_n)\, \tilde{y}_n(t) - \frac{\| \tilde{y}_n \|_2^2}{\| \tilde{y}_{n-1} \|_2^2}\, \tilde{y}_{n-1}(t)$$

for all $t \in K$, $n = 1,2,\ldots$.

Finally, setting (2), (3) and (4) into (8) we obtain, after a simple computation, formula (1).

3. Theorem. Suppose:

1) I is a subinterval of $(-\infty,+\infty)$ with terminal points a,b such that $-\infty \leq a < b \leq +\infty$.

2) w is a classical weight function on I (see 6.1!).

3) $0 \neq \alpha_n \in (-\infty,+\infty)$ for $n = 0,1,\ldots$.

4) $y_n(t) = \alpha_n \dfrac{1}{w(t)} \left[w_2^n(t)\, w(t) \right]^{(n)}$ for all $t \in (a,b)$, $n = 0,1,\ldots$, where w_2 has the same meaning as in 6.1.

Then, using the notation in 6.1, the following recurrence formula holds:

$$\frac{\alpha_n}{\alpha_{n+1}} \frac{w_{1,1} + (n+1)w_{2,2}}{\left[w_{1,1} + (2n+1)w_{2,2} \right]\left[w_{1,1} + (2n+2)w_{2,2} \right]}\, y_{n+1}(t) =$$

$$= \left[t + (n+1) \frac{w_{1,0} + (n+1)\, w_{2,1}}{w_{1,1} + (2n+2)w_{2,2}} - n \frac{w_{1,0} + n\, w_{2,1}}{w_{1,1} + 2n\, w_{2,2}} \right] y_n(t) +$$

$$+ \frac{\alpha_n}{\alpha_{n-1}}\, n \frac{\int_a^b w_2^n(\tau)\, w(\tau)\, d\tau}{\int_a^b w_2^{n-1}(\tau)\, w(\tau)\, d\tau}\, y_{n-1}(t) \quad \text{for all } t \in K,\ n = 1,2,3,\ldots$$

Proof. By 2) and 6.1, the weight function w satisfies assumptions 2) and 3) in 2. By 3), 4) and 9.2, y_n is a real polynomial of degree n, and $y_0, y_1, \ldots$ is an orthogonal system on I with respect to w, so that also assumptions 4) and 5) in 2. are satisfied. Consequently, by 2.,

$$(2) \qquad \frac{a_n}{a_{n+1}} y_{n+1}(t) = \left(t + \frac{b_{n+1}}{a_{n+1}} - \frac{b_n}{a_n}\right) y_n(t) - \frac{a_{n-1}}{a_n} \frac{\|y_n\|_2^2}{\|y_{n-1}\|_2^2} y_{n-1}(t)$$

$$\text{for all } t \in K, \quad n = 1,2,\ldots,$$

where a_n and b_n are the coefficients of t^n and t^{n-1} in y_n respectively, and $\|y_n\|_2$ is the norm of y_n $(n = 0,1,\ldots)$. But a_n, b_n and $\|y_n\|_2^2$ $(n = 0,1,\ldots)$ may be calculated by means of formulae III., IV. and V. in 9.2. Setting these formulae into (2) (first for $n = 1$, then for $n = 2,3,\ldots$) we obtain, after a simple calculation, formula (1).

4. Theorem.

I. The standard Jacobi polynomials $P_n^{(\alpha,\beta)}$ $(n = 0,1,\ldots)$ with indices $\alpha, \beta \in (-1, +\infty)$ satisfy the recurrence formula

$$P_{n+1}^{(\alpha,\beta)}(t) = \frac{2n+\alpha+\beta+1}{2(n+1)(n+\alpha+\beta+1)} \left[(2n+\alpha+\beta+2)t + \frac{\alpha^2-\beta^2}{2n+\alpha+\beta} \right] P_n^{(\alpha,\beta)}(t) -$$

$$- \frac{(n+\alpha)(n+\beta)(2n+\alpha+\beta+2)}{(n+1)(n+\alpha+\beta+1)(2n+\alpha+\beta)} P_{n-1}^{(\alpha,\beta)}(t) \quad \text{for all } t \ (n = 1,2,\ldots).$$

II. <u>The standard Gegenbauer polynomials</u> $P_n^{(\alpha)} = P_n^{(\alpha,\alpha)}$ $(n = 0,1,\ldots)$ <u>with index</u> $\alpha \in (-1,+\infty)$ <u>satisfy the recurrence formula</u>

$$P_{n+1}^{(\alpha)}(t) = \frac{(n+\alpha+1)(2n+2\alpha+1)}{(n+1)(n+2\alpha+1)}\, t\, P_n^{(\alpha)}(t) - \frac{(n+\alpha+1)(n+\alpha)}{(n+1)(n+2\alpha+1)}\, P_{n-1}^{(\alpha)}(t)$$

<u>for all</u> t $(n = 1,2,\ldots)$.

III. <u>The standard Legendre polynomials</u> $P_n = P_n^{(0,0)}$ $(n = 0,1,\ldots)$ <u>satisfy the recurrence formula</u>

$$P_{n+1}(t) = \frac{2n+1}{n+1}\, t\, P_n(t) - \frac{n}{n+1}\, P_{n-1}(t) \qquad \text{for all } t \quad (n = 1,2,\ldots).$$

IV. <u>The standard Tchebysheff polynomials</u> T_n <u>and conjugate Tchebysheff polynomials</u> U_n $(n = 0,1,\ldots)$ <u>satisfy the recurrence formula</u>

$$\left.\begin{aligned} T_{n+1}(t) &= 2t\, T_n(t) - T_{n-1}(t) \\ U_{n+1}(t) &= 2t\, U_n(t) - U_{n-1}(t) \end{aligned}\right\} \quad \text{for all } t \quad (n = 1,2,\ldots).$$

V. <u>The standard Laguerre polynomials</u> $L_n^{(\alpha)}$ $(n = 0,1,\ldots)$ <u>with index</u> $\alpha \in (-1,+\infty)$ <u>satisfy the recurrence formula</u>

$$L_{n+1}^{(\alpha)}(t) = (t+2n+\alpha+1)\, L_n^{(\alpha)}(t) - n(n+\alpha)\, L_{n-1}^{(\alpha)}(t) \qquad \text{for all } t$$

$(n = 1,2,\ldots)$.

VI. <u>The standard Hermite polynomials</u> H_n $(n = 0,1,\ldots)$ <u>satisfy the recurrence formula</u>

$$H_{n+1}(t) = 2t\, H_n(t) - 2n\, H_{n-1}(t) \qquad \underline{\text{for all}}\ t \quad (n = 1,2,\ldots).$$

<u>In all the preceding cases the coefficients of the corresponding standard polynomials for</u> $n = 0,1$ <u>may be calculated by means of the corresponding formulae in</u> 10.2, 10.3, 10.6, 10.9, 10.11 <u>and</u> 10.13.

<u>Proof</u>. By 6.3, the weight functions of all the above kinds of standard polynomials are classical weight functions in the corresponding intervals so that the recurrence formula in the preceding theorem 3. may be applied. From 6.3 we also know the corresponding polynomials w_1 and w_2 as defined in 6.1 and thus also their coefficients $w_{1,0}, w_{1,1}, \ldots, w_{2,2}$. From 6.10, 6.11 and 6.12 we then have the corresponding integrals $\int_a^b w_2^n(t)\, w(t)dt$ $(n = 0,1,\ldots)$, and finally in § 11. we have a definition of the corresponding factors α_n $(n = 0,1,\ldots)$ in the Rodriguez formula. Setting all this into the recurrence formula in 3. (in I.-IV. first for $n = 1$, and then for $n = 2,3,\ldots$) we obtain, after a simple calculation, the above recurrence formulae.

<u>5. Remarks</u>. The results in 1. were already known to Christoffel and Darboux. Our proof has been taken from Natanson (12), vol. 2, pp. 50-53.

A different proof of 2. was recently published by Tricomi (32). In Szego (14) we find a similar recurrence formula with three constants depending on n. Two of them are expressed in terms of the leading coefficients of the polynomials in question while the third remains undetermined.

The result in 3. seems to be new.

§ 12. Further auxiliary results

1. Lemma. Suppose:

1) $w_2(\xi) = w_{2,0} + w_{2,1}\xi + w_{2,2}\xi^2$ for all $\xi \in K$,

where $w_{2,0}, w_{2,1}, w_{2,2} \in K$.

2) $P(t,z;\xi) = \xi - t - x\, w_2(\xi)$ for all $t, x, \xi \in K$.

Then the following holds:

I. $P(t,0;\xi)$ is a polynomial of degree 1 in ξ for all $t \in K$ with the root $\xi_1(t,0) = t$ for all $t \in K$. The root is a holomorphic function of t for all $t \in K$.

II. Let $w_{2,2} = 0$. Set $U(0) = \{ z \in K; |w_{2,2}\, z| < 1 \}$. Then $P(t,z;\xi)$ is a polynomial of degree 1 in ξ for all $t \in K$, $z \in U(0)$, with the root

$$\xi_1(t,z) = \frac{t + w_{2,0}\, z}{1 - w_{2,2}\, z} \quad \text{for all} \quad t \in K,\ z \in U(0).$$

The root is a holomorphic function of t and z for all $t \in K$, $z \in U(0)$, and

$$\lim_{z \to 0} \xi_1(t,z) = t = \xi_1(t,0) \quad \text{for all} \quad t \in K.$$

III. Let $w_{2,2} \neq 0$. Then $P(t,z;\xi)$ is a polynomial of degree 2 in ξ for all $t \in K$, $0 \neq z \in K$, with the roots

$$\left.\begin{matrix}\xi_1(t,z)\\ \xi_2(t,z)\end{matrix}\right\} = \frac{1}{2w_{2,2}z}\left\{(1-w_{2,1}z) \mp \sqrt{1-\left[(4w_{2,0}w_{2,2}-w_{2,1}^2)\,z^2 + 2_{2,1}z + 4w_{2,2}tz\right]}\right\}$$

<u>for all</u> $t \in K,\ 0 \neq z \in K,$

<u>where</u> $\sqrt{\cdots}$ <u>is the principal value of the square root. If</u> G_0 <u>is an arbitrary bounded region in the complex</u> t-<u>plane then there exists a spherical neighborhood</u> $U(0)$ <u>of</u> 0 <u>in the complex</u> z-<u>plane such that</u> $\xi_1(t,z)$ <u>and</u> $\xi_2(t,z)$ <u>are holomorphic functions of</u> t <u>for all</u> $t \in G_0$ <u>and each fixed</u> $0 \neq z \in U(0)$, <u>and holomorphic functions of</u> z <u>for all</u> $0 \neq z \in U(0)$ <u>and each fixed</u> $t \in G_0$. <u>Finally</u>

$$\lim_{z \to 0} \xi_1(t,z) = t \overset{\text{I.}}{=} \xi_1(t,0),\ \lim_{z \to 0} \xi_2(t,z) = \infty \qquad \underline{\text{for all}}\ t \in K.$$

<u>Proof</u>. By 2) and 1),

$$(1)\quad \begin{cases} P(t,z;\xi) = \xi - t - z\,w_2(\xi) = \xi - t - z\,(w_{2,0} + w_{2,1}\xi + w_{2,2}\xi^2) = \\ = -w_{2,2}\,z\,\xi^2 + (1 - w_{2,1}z)\,\xi - (t + w_{2,0}z) \qquad \underline{\text{for all}}\ t,z,\xi \in K. \end{cases}$$

Consequently $P(t,0;\xi) = \xi - t$ for all $t,\xi \in K$, whence I. follows.

If $w_{2,2} = 0$ then $P(t,z;\xi) = (1 - w_{2,1}z)\,\xi - (t + w_{2,0}z)$ for all $t,z,\xi \in K$, whence II. easily follows.

Let $w_{2,2} \neq 0$. Then, by (1), $P(t,z;\xi)$ is a polynomial of degree 2 in ξ for all $t \in K,\ 0 \neq z \in K$, with the roots

$$(2)\quad \begin{cases} \begin{matrix}\xi_1(t,z)\\ \xi_2(t,z)\end{matrix} = \dfrac{1}{2w_{2,2}z}\left[(1-w_{2,1}z) \mp \sqrt{(1-w_{2,1}z)^2 - 4w_{2,2}z(t+w_{2,0}z)}\right] \\ = \dfrac{1}{2w_{2,2}z}\left\{(1-w_{2,1}z) \mp \sqrt{1-\left[(4w_{2,0}w_{2,2}-w_{2,1}^2)z^2 + 2w_{2,1}z + 4w_{2,2}tz\right]}\right. \\ \qquad \text{for all} \quad t \in K,\ 0 \neq z \in K, \end{cases}$$

where $\sqrt{\ldots}$ denotes the principal value of the square root.

Let G_0 be any bounded region in the complex t-plane. Then there exists M such that

$$(3)\qquad |4w_{2,2}t| \leq M < +\infty \qquad \text{for all} \quad t \in G_0.$$

Next there obviously exists a spherical neighborhood $U(0)$ of 0 in the z-plane such that

$$(4)\qquad \left|(4w_{2,0}w_{2,2}-w_{2,1}^2)z^2 + 2w_{2,1}z\right| < \tfrac{1}{2},\ M|z| < \tfrac{1}{2} \qquad \text{for all} \quad z \in U(0).$$

Hence

$$(5)\qquad \left|(4w_{2,0}w_{2,2}-w_{2,1}^2)z^2 + 2w_{2,1}z + 4w_{2,2}tz\right| \overset{(3),(4)}{<} 1 \quad \text{for all } t \in G_0,\ z \in U$$

By (2) and (5), the roots $\xi_1(t,z)$ and $\xi_2(t,z)$ are holomorphic functions of t for all $t \in G_0$ and each fixed $0 \neq z \in U(0)$, and holomorphic functions of t for all $0 \neq z \in U(0)$ and each fixed $t \in G_0$.

Next by (2),

$$\xi_1(t,z) = \frac{2(t+w_{2,0}z)}{(1-w_{2,1}z) + \sqrt{(1-w_{2,1}z)^2 + 4w_{2,2}z(t+w_{2,0}z)}} \quad \text{for all}$$

$$t \in K,\ 0 \neq z \in K.$$

Hence $\lim_{z \to 0} \xi_1(t,z) = t$ for all $t \in K$. Finally, by (2), $\lim_{z \to 0} \xi_2(t,z) = \infty$ for all $t \in K$, which completes the proof of III.

2. Lemma. Suppose:

1) $w_2(\xi) = w_{2,0} + w_{2,1}\xi + w_{2,2}\xi^2$ for all $\xi \in K$,

where $w_{2,0}, w_{2,1}, w_{2,2} \in K$.

2) $P(t,x;\xi) = \xi - t - z\, w_2(\xi)$ for all $t, z, \xi \in K$.

3) If $w_{2,2} = 0$ then $\xi_1(t,z) = \dfrac{t + w_{2,0}z}{1 - w_{2,1}z}$ for all $t \in K$, $|w_{2,1}z| < 1$. If $w_{2,2} \neq 0$, then

$$\xi_1(t,z) = \begin{cases} t & \text{for all } t \in K \text{ and } z = 0, \\ \dfrac{1}{2w_{2,2}z}\left\{(1-w_{2,1}z) - \sqrt{1 - \left[(4w_{2,0}w_{2,2} - w_{2,1}^2)z^2 + 2w_{1,1}z + 4w_{2,2}tz\right]}\right\} & \text{for all } t \in K,\ 0 \neq z \in K, \end{cases}$$

where $\sqrt{\cdots}$ is the principal value of the square root.

Then the following holds:

I. Given any $t \in K$, $r \in (0,+\infty)$, there exists a spherical neighbourhood $U_{t,r}(0)$ of 0 in the z-plane such that, for all $z \in U_{t,r}(0)$, the polynomial $P(t,z;\xi)$ of ξ has a simple root $\xi_1(t,z)$ in $\{\xi \in K;\ |\xi - t| < r\}$ and no other roots in $\{\xi \in K;\ |\xi - t| \leq r\}$.

II. Let G_0 be a region in the t-plane; and let G_0 be bounded if $w_{2,2} \neq 0$. Then there exists a spherical neighborhood $U(0)$ of

0 <u>in the</u> z-<u>plane such that, for any fixed</u> $z \in U(0)$, $\xi_1(t,z)$ <u>is a holomorphic function of</u> t <u>in</u> G_0, <u>and for any fixed</u> $t \in G_0$, $\xi_1(t,z)$ <u>is a holomorphic function of</u> z <u>in</u> $U(0)$.

<u>Proof</u> Easily follows from 1. using the limiting properties of the roots $\xi_1(t,z)$ and $\xi_2(t,z)$ as $t \in K$, $z \to 0$.

§ 13. The generating function

1. Theorem Suppose:

1) I is a subinterval of $(-\infty,+\infty)$ with terminal points a,b such that $-\infty \leq a < b \leq +\infty$.

2) $G = K - [(-\infty,+\infty) - (a,b)]$.

3) w is a classical weight function on I (see 6.1!).

(Consequently, by 6.8, there exists a holomorphic extension of w from (a,b) into G wuch that $w(t) \neq 0$ for all $t \in G$.)

4) $0 \neq \alpha_n \in (-\infty,+\infty)$ for $n = 0,1,\ldots$.

5) $y_n(t) = \alpha_n \frac{1}{w(t)} [w_2^n(t)\, w(t)]^{(n)}$ for all $t \in (a,b)$, $n = 0,1,\ldots,$ where w_2 has the same meaning as in 6.1.

(Consequently, by the Rodriguez theorem 9.1, y_n is a polynomial of degree n with real coefficients $(n = 0,1,\ldots)$, and $y_0,y_1,\ldots$ is an orthogonal system on I with respect to w.)

6) If we apply the same notation as in 6.1, and if $w_{2,2} = 0$, then

$$\xi_1(t,z) = \frac{t + w_{2,0}z}{1 - w_{2,1}z} \quad \text{for all} \quad t \in K,\ |w_{2,1}z| < 1.$$

If $w_{2,2} \neq 0$ then

$$\xi_1(t,z) = \begin{cases} t & \underline{\text{for all}} \quad t \in K \quad \underline{\text{and}} \quad z = 0, \\ \dfrac{1}{2\, w_{2,2} z} \left\{ (1-w_{2,1}z) - \sqrt{1 - [(4w_{2,0}\, w_{2,2} - w_{2,1}^2)z^2 + w_{2,1}z + 4w_{2,2}tz} \right. & \\ & \underline{\text{for all}} \quad t \in K \quad \underline{\text{and}} \quad 0 \neq z \in K, \end{cases}$$

<u>where</u> $\sqrt{\cdots}$ <u>is the principal value of the square root.</u>

(Consequently the statements I. and II. in 11.2 hold.)

<u>Then given any</u> $t \in G$ <u>there exists a spherical neighborhood</u> $U_t(0)$ <u>of</u> 0 <u>in the z-plane such that</u>

$$(1) \qquad \frac{1}{w(t)} \; \frac{w\,[\xi_1(t,z)]}{1-z\, w_2'\,[\xi_1(t,z)]} = \sum_{n=0}^{+\infty} \frac{y_n(t)}{n!\;\alpha_n} z^n \qquad \underline{\text{for all}} \quad z \in U_t(0).$$

<u>The function on the left-hand side of</u> (1) <u>is said to be the generating function for</u> $y_0, y_1, \cdots$.

<u>Proof.</u> Fix any $t \in G$. Since, by 2), G is a region in the complex plane (say the ξ-plane) there exists $r \in (0,+\infty)$ such that the spherical neighborhood $V(t)$ of t with the radius r, i.e. $V(t) = \{\xi \in K;\ |\xi - t| < r$ satisfies the condition $V(t) \subset \overline{V(t)} \subset G$. Let $\xi = t + re^{i\varphi}$ $(-\pi \leq \varphi \leq \pi)$ be the equation of the boundary circumference C of $V(t)$ in the ξ-plane. Next let

$$(2) \qquad P(t,z;\xi) = \xi - t - z\, w_2(\xi) \qquad \text{for all} \quad z, \xi \in K.$$

By 3), (2), 6) and 12.2, there exists a spherical neighborhood $U_{t,r}(0)$ of 0 in the z-plane such that, for all $z \in U_{t,r}(0)$, the polynomial

$P(t,z;\xi)$ of ξ has a simple root $\xi_1(t,z)$ in $V(t) = \{\xi \in K;\ |\xi - t| < r\}$ and no other roots $\overline{V(t)}$. Next by 3) and 6.8, the function w is holomorphic and $w(\xi) \neq 0$ for all $\xi \in \overline{V(t)} \subset G$. Hence it follows that, for any

$z \in U_{t,r}(0)$, $\dfrac{w(\xi)}{P(t,z;\xi)} = \dfrac{w(\xi)}{\xi - t - z\, w_2(\xi)}$ is a holomorphic function of ξ

on $\overline{V(t)}$ except for a simple pole $\xi = \xi_1(t,z) \in V(t)$. Consequently, by the residue theorem,

$$(3)\quad \left\{ \begin{aligned} &\frac{1}{2\pi i}\int_C \frac{w(\xi)}{\xi - t - z\, w_2(\xi)}\, d\xi = \operatorname*{res}_{\xi = \xi_1(t,z)} \frac{w(\xi)}{\xi - t - z\, w_2(\xi)} = \\ &= \left[\frac{w(\xi)}{\frac{d}{d\xi}(\xi - t - z\, w_2(\xi))}\right]_{\xi = \xi_1(t,z)} = \frac{w[\xi_1(t,z)]}{1 - z\, w_2'[\xi_1(t,z)]} \\ &\qquad \text{for all } z \in U_{t,r}(0). \end{aligned} \right.$$

Since, by 3) and 6.1, w_2 is a polynomial, we have $|w_2(\xi)| \leq M < +\infty$ for all $\xi \in C$ so that $\left|\dfrac{w_2(\xi)}{\xi - t}\right| \leq \dfrac{M}{r}$ for all $\xi \in C$. Fix any $\eta \in (0,1)$, and set

$$(4)\qquad U_t(0) = \left\{ z \in K;\ z \in U_{t,r}(0),\ |z| < \frac{1}{M+1} r\eta \right\} \subset U_{t,r}(0).$$

Then $\left|\dfrac{z\, w_2(\xi)}{\xi - t}\right| = |z| \left|\dfrac{w_2(\xi)}{\xi - t}\right| < \dfrac{r}{M+1}\, \eta\, \dfrac{M}{r} < \eta < 1$ for all $z \in U_t(0)$, $\xi \in C$ so that

$$(5)\quad \left\{ \begin{aligned} &\sum_{n=0}^{+\infty} \left[\frac{z\, w_2(\xi)}{\xi - t}\right]^n = \frac{1}{1 - \dfrac{z\, w_2(\xi)}{\xi - t}} = \frac{\xi - t}{\xi - t - z\, w_2(\xi)} \\ &\qquad \text{uniformly for all } z \in U_t(0),\ \xi \in C. \end{aligned} \right.$$

By (5) and the Cauchy formula,

$$(6)\quad \left\{ \begin{aligned} & \frac{1}{2\pi i}\int_C \frac{w(\xi)}{\xi-t-z\,w_2(\xi)}\,d\xi = \frac{1}{2\pi i}\int_C \frac{w(\xi)}{\xi-t}\,\frac{\xi-t}{\xi-t-z\,w_2(\xi)}\,d\xi \overset{(5)}{=} \\ & \overset{(5)}{=} \frac{1}{2\pi i}\int_C \frac{w(\xi)}{\xi-t}\sum_{n=0}^{+\infty}\left[\frac{z\,w_2(\xi)}{\xi-t}\right]^n d\xi = \frac{1}{2\pi i}\sum_{n=0}^{+\infty} z^n \int_C \frac{w_2^n(\xi)w(\xi)}{(\xi-t)^{n+1}}\,d\xi = \\ & = \sum_{n=0}^{+\infty}\frac{z^n}{n!}\,\frac{n!}{2\pi i}\int_C \frac{w_2^n(\xi)w(\xi)}{(\xi-t)^{n+1}}\,d\xi \overset{\text{Cauchy}}{=} \sum_{n=0}^{+\infty}\frac{z^n}{n!}\left[w_2^n(t)w(t)\right]^{(n)} \\ & \qquad \text{for all } z\in U_t(0). \end{aligned} \right.$$

By 9.1, 3) and 6.8, both sides of the formula in 4) may be extended holomorphically into G so that, by 4) and a well known theorem, 4) holds not only in (a,b) but also in G. Hence by 3)

$$(7)\qquad \left[w_2^n(t)w(t)\right]^{(n)} = \frac{1}{\alpha_n}\,w(t)\,y_n(t) \qquad \text{for all } n = 0,1,\ldots .$$

Setting (5) into (6) we obtain

$$(8)\qquad \frac{1}{2m}\int_C \frac{w(\xi)}{\xi-t-z\,w_2(\xi)}\,d\xi = w(t)\sum_{n=0}^{+\infty}\frac{y_n(t)}{n!\,\alpha_n}\,z^n \qquad \text{for all } z\in U_t(0).$$

By (3) and (8),

$$\frac{w\left[\xi_1(t,z)\right]}{1-z\,w_2'\left[\xi_1(t,z)\right]} = w(t)\sum_{n=0}^{+\infty}\frac{y_n(t)}{n!\,\alpha_n}\,z^n \qquad \text{for all } z\in U_t(0).$$

Since by 3) and 6.8, $w(t)\neq 0$ for each $t\in G$, dividing both sides by $w(t)$ formula (1) follows.

2. Remark. It follows from the proof of 1. that formula (1) remains true for all $t \in G$ also if G is any complex region containing $K - [(-\infty,+\infty)-(a,b)]$ such that there exists a holomorphic extension of w from (a,b) into G with the property $w(t) \neq 0$ for all $t \in G$.

3. Theorem. Suppose:

1) $G = K - (-\infty,-1] - [1,+\infty)$.

2) $P_n^{(\alpha,\beta)}$ is the standard Jacobi polynomial of degree n with indices α,β $(-1,+\infty)$ $(n = 0,1,\ldots)$.

Then given any $t \in G$ there exists a spherical neighborhood $V_t(0)$ of 0 in the z-plane such that

$$(1) \qquad \frac{2^{\alpha+\beta}}{(1-z+\sqrt{1-2tz+z^2})^{\alpha}(1+z+\sqrt{1-2tz+z^2})^{\beta}} \frac{1}{\sqrt{1-2tz+z^2}} = \sum_{n=0}^{+\infty} P_n^{(\alpha,\beta)}(t)\, z^n$$

for all $z \in U_t(0)$,

where $\sqrt{w}$, w^{α} and w^{β} denote the principal values of the corresponding multivalued functions.

Proof. By 1), 6.3 and 6.8, the Jacobi polynomials have the classical weigh function

$$(2) \qquad w(t) = (1-t)^{\alpha}(1+t)^{\beta} \qquad \text{for} \qquad t \in G,$$

where $(1-t)^{\alpha}$ and $(1+t)^{\beta}$ again denote the principal values for all $t \in G$. Using the notation of 6.1 it follows from 6.3 that

(3) $\quad w_2(t) = 1-t^2$; hence $w_{2,0} = 1$, $w_{2,1} = 0$, $w_{2,2} = -1$, $w_2'(t) = -2t$.

Therefore, by 1.,

$$(4) \quad \xi_1(t,z) = \begin{cases} t & \text{for } t \in G, \ z = 0, \\ -\frac{1}{2z}\left(1 - \sqrt{1+4tz+4z^2}\right) & \text{for } t \in G, \ 0 \neq z \in K. \end{cases}$$

where $\sqrt{\ldots}$ again denotes the principal value.

Fix any $t \in G$. Then, by (2),(3),(4) and 1., there exists a spherical neighborhood $U_t(0)$ of 0 in the z-plane such that

$$(5) \quad \frac{1}{w(t)} \frac{w\left[\xi_1(t,z)\right]}{1-z\, w_2'\left[\xi_1(t,z)\right]} = \sum_{n=0}^{+\infty} \frac{P_n^{(\alpha,\beta)}}{n!\ \alpha_n} z^n \qquad \text{for all } z \in U_t(0),$$

where α_n $(n = 0,1,\ldots)$ are the coefficients in the Rodriguez formula, i.e. by 2) and 10.1,

$$(6) \quad \alpha_n = \frac{(-1)^n}{2^n\, n!} \quad (n = 0,1,\ldots).$$

By (2),(3) and (4),

$$(7) \quad \begin{cases} \dfrac{1}{w(t)} \dfrac{w\left[\xi_1(t,z)\right]}{1-z\, w_2'\left[\xi_1(t,z)\right]} \overset{(2),(3)}{=} \dfrac{\left[1-\xi_1(t,z)\right]^\alpha}{(1-t)^\alpha} \dfrac{\left[1+\xi_1(,z)\right]^\beta}{(1+t)^\beta} \dfrac{1}{t+2z\,\xi_1(t,z)} \\[2ex] \overset{(4)}{=} \dfrac{\left[1-\xi_1(t,z)\right]^\alpha}{(1-t)^\alpha} \dfrac{\left[1+\xi_1(t,z)\right]^\beta}{(1+t)^\beta} \dfrac{1}{\sqrt{1+4tz+z^2}} \qquad \text{for all } z \in U_t(0), \end{cases}$$

where w^{α} and w^{β} denote the principal values. Next, by (6),

$$(8) \qquad \sum_{n=0}^{+\infty} \frac{P_n^{(\alpha,\beta)}(t)}{n!\ \alpha_n} \overset{(6)}{=} \sum_{n=0}^{+\infty} P_n^{(\alpha,\beta)}(t)\ (-2z)^n \qquad \text{for} \quad z \in U_t(0).$$

Setting (7) and (8) into (5)

$$\frac{[1-\xi_1(t,z)]^{\alpha}}{(1-t)^{\alpha}} \quad \frac{[1+\xi_1(t,z)]^{\beta}}{(1+t)^{\beta}} \quad \frac{1}{\sqrt{1+4tz+4z^2}} = \sum_{n=0}^{+\infty} P_n^{(\alpha,\beta)}(t)\ (-2z)^n$$

$$\text{for all} \quad z \in U_t(0).$$

Setting $-2z = w$, $z = -\frac{1}{2}w$, $\{-2z;\ z \in U_t(0)\} = V_t(0)$, and then again writing z instead of w

$$(9) \quad \left\{ \begin{array}{l} \dfrac{[1-\xi_1(t,-\frac{1}{2}z)]^{\alpha}}{(1-t)^{\alpha}} \quad \dfrac{[1+\xi_1(t,-\frac{1}{2}z)]^{\beta}}{(1+t)^{\beta}} \quad \dfrac{1}{\sqrt{1-2tz+z^2}} = \displaystyle\sum_{n=0}^{+\infty} P_n^{(\alpha,\beta)}(t)\ z^n \\ \qquad \text{for all} \quad z \in V_t(0). \end{array} \right.$$

By (4),

$$(10) \quad \left\{ \begin{array}{l} 1+\xi_1(t,-\frac{1}{2}z) \overset{(4)}{=} 1+\dfrac{1}{z}\left(1-\sqrt{1-2tz+z^2}\right) = \dfrac{1+z-\sqrt{1-2tz+z^2}}{z} = \\ = \dfrac{1}{z}\ \dfrac{(1+z)^2-(1-2tz+z^2)}{1+z+\sqrt{1-2tz+z^2}} = \dfrac{1}{z}\ \dfrac{1+2x+z^2-1+2tz-z^2}{1+z+\sqrt{1-2tz+z^2}} = \dfrac{2(1+t)}{1+z+\sqrt{1-2tz+z^2}} \\ \qquad \text{for} \quad 0 \neq z \in V_t(0) \quad \text{and by (4), also for} \quad z = 0. \end{array} \right.$$

Since $t \in G$, 1) implies $1+t \neq 0$. By 4) and 12.1,

(11) $$\lim_{z \to 0} \xi_1(t,z) = t.$$

Consequently, choosing $V_t(0)$ sufficiently small, $1 + \xi_1(t,z)$ is approximately equal to $1 + t \neq 0$ and thus $\neq 0$ for all $z \in V_t(0)$. Then

$$\log\left[1+\xi_1(t,-\tfrac{1}{2}z)\right] - \log(1+t) = \log\frac{1+\xi_1(t,-\frac{1}{2}z)}{1+t} + 2k\pi i$$

$$\text{for all } z \in V_t(0),$$

where log denotes the principal value of the logarithm and k is some integer. By (11), the left-hand side and the first term on the right-hand side tend to 0 as $z \to 0$. Consequently, for $V_t(0)$ sufficiently small, we necessarily have $k = 0$, i.e.

(12) $$\begin{cases} \log\left[1+\xi_1(t,-\frac{1}{2}z)\right] - \log(1+t) = \log\dfrac{1+\xi_1(t,-\frac{1}{2}z)}{1+t} \\ \text{for all } z \in V_t(0). \end{cases}$$

Similarly, for $V_t(0)$ sufficiently small,

(13) $$\log 2 - \log\left(1+z+\sqrt{1-2tz+z^2}\right) = \log\frac{2}{1+z+\sqrt{1-2tz+z^2}} \quad \text{for all } z \in V_t(0).$$

By (12), (10) and (13),

$$(14)\quad \begin{cases} \dfrac{\left[1+\xi_1(t,-\frac{1}{2}z)\right]^{\beta}}{(1+t)^{\beta}} = \dfrac{e^{\beta\log\left[1+\xi_1(t,-\frac{1}{2}z)\right]}}{e^{\beta\log(1+t)}} = \\[2ex] = e^{\beta\left\{\log\left[1+\xi_1(t,-\frac{1}{2}z)\right]-\log(1+t)\right\}} \overset{(12)}{=} e^{\beta\log\frac{1+\xi_1(t,-\frac{1}{2}z)}{1+t}} \overset{(10)}{=} \\[2ex] \overset{(10)}{=} e^{\beta\log\frac{2}{1+z+\sqrt{1-2tz+z^2}}} \overset{(13)}{=} e^{\beta\left[\log 2-\log(1+z+\sqrt{1-2tz+z^2})\right]} = \\[2ex] = \dfrac{e^{\beta\log 2}}{e^{\beta\log(1+z+\sqrt{1-2tz+z^2})}} = \dfrac{2^{\beta}}{(1+z+\sqrt{1-2tz+z^2})^{\beta}} \quad \text{for all } z\in V_t(0). \end{cases}$$

Similarly

$$(15)\qquad \frac{\left[1-\xi_1(t,-\frac{1}{2}z)\right]^{\alpha}}{(1-t)^{\alpha}} = \frac{2^{\alpha}}{(1-z+\sqrt{1-2tz+z^2})^{\alpha}} \qquad \text{for all } z\in V_t(0).$$

Setting (14) and (15) into (9) we obtain (1).

<u>4. Theorem</u>. <u>Suppose</u>:

1) $G = K - (-\infty,-1] - [1,+\infty)$.

2) $P_n^{(\alpha)} = P_n^{(\alpha,\alpha)}$ <u>is the standard Gegenbauer polynomial of degree</u> n <u>with index</u> $\alpha\in(-1,+\infty)$ $(n = 0,1,\ldots)$.

<u>Then given any</u> $t\in G$ <u>there exists a spherical neighborhood</u> $V_t(0)$ <u>of</u> 0 <u>in the</u> z-<u>plane such that</u>

$$(1)\qquad \frac{2^{\alpha}}{(1-tz+\sqrt{1-2tz+z^2})^{\alpha}}\;\frac{1}{\sqrt{1-2tz+z^2}} = \sum_{n=0}^{+\infty} P_n^{(\alpha)}(t)\,z^n \qquad \underline{\text{for all}}\ z\in V_t(0),$$

<u>where</u> w <u>and</u> w^{α} <u>denote the principal values of the corresponding multivalued functions</u>.

<u>Proof</u>. Fix any $t \in G$. By 3. for $\alpha = \beta$, there exists a neighborhood $V_t(0)$ of 0 in the z-plane such that

$$(2)\quad \begin{cases} \displaystyle\sum_{n=0}^{+\infty} P_n^{(\alpha)}(t)\, z^n = \frac{4^\alpha}{(1-z+\sqrt{1-2tz+z^2})^\alpha\,(1+z+\sqrt{1-2tz+z^2})^\alpha}\,\frac{1}{\sqrt{1-2tz+z^2}} = \\ \displaystyle = \frac{4^\alpha}{e^{\alpha\log(1-z+\sqrt{1-2tz+z^2})}\; e^{\alpha(1+z+\sqrt{1-2tz+z^2})}}\,\frac{1}{\sqrt{1-2tz+z^2}} = \\ \displaystyle = \frac{4^\alpha}{e^{\alpha\left[\log(1-z+\sqrt{1-2tz+z^2})+\log(1+z+\sqrt{1-2tz+z^2})\right]}}\,\frac{1}{\sqrt{1-2tz+z^2}} \\ \qquad \text{for all } z \in V_t(0). \end{cases}$$

where $\sqrt{w}$, w^α and $\log w$ denote the principal values of the corresponding multivalued functions.

But

$$\log(1-z+\sqrt{\dots}) + \log(1+z+\sqrt{\dots}) = \log\left[(1-z+\sqrt{\dots})(1+z+\sqrt{\dots})\right] + 2k\pi i =$$

$$= \log\left[(1+\sqrt{\dots})^2 - z^2\right] + 2k\pi i = \log(1+2\sqrt{\dots} + 1-2tz+z^2-z^2) + 2k\pi i =$$

$$= \log 2(1-tz+\sqrt{\dots}) + 2k\pi i = \log 2 + \log(1-tz+\sqrt{\dots}) + 2\ell\pi i$$

$$\text{for all } z \in V_t(0),$$

where k and ℓ are integers. Letting $z \to 0$ we obtain $2\log 2 = 2\log 2 + 2\ell\pi i$ so that $\ell = 0$, i.e.

$$(3)\quad \begin{cases} \log(1-z+\sqrt{\dots}) + \log(1+z+\sqrt{\dots}) = \log 2 + \log(1-tz+\sqrt{\dots}) \\ \qquad \text{for all } z \in V_t(0), \end{cases}$$

if V_t is sufficiently small. Setting (3) into (2) we obtain

$$\sum_{n=0}^{+\infty} P_n^{(\alpha)}(t)z^n = \frac{4^\alpha}{e^{\alpha\left\{\log 2 + \log(1-tz+\sqrt{1-2t2+z^2})\right\}}} \frac{1}{\sqrt{1-2tz+z^2}} =$$

$$= \frac{4^\alpha}{e^{\alpha \log 2}\, e^{\alpha \log(1-tz+\ 1-2tz+z^2)}} \frac{1}{1-2tz+z^2} =$$

$$= \frac{2^\alpha}{(1-tz+\sqrt{1-2tz+z^2})^\alpha} \frac{1}{\sqrt{1-2tz+z^2}} \qquad \text{for all } z \in V_t(0).$$

5. Theorem. Let P_n be the standard Legendre polynomial of degree n $(n = 0,1,\ldots)$. Then given any $t \in K$ there exists a spherical neighborhood $V_t(0)$ of 0 in the z-plane such that

$$\frac{1}{\sqrt{1-2tz+z^2}} = \sum_{n=0}^{+\infty} P_n(t)z^n \qquad \text{for all } z \in V_t(0),$$

where w is the principal value of the square root.

Proof. Since $w(t) = 1$ for all $t \in K$ is the holomorphic extension of the corresponding weight function $w(t) = 1$ for $t \in (-1,1)$ into K it follows from 2. that, in this case, we may take $G = K$ in 1. Everything is then a consequence of 3. for $\alpha = \beta = 0$, or of 4. for $\alpha = 0$.

6. Theorem. Suppose:

1) $G = K - (-\infty,-1] - [1,+\infty)$.

2) T_n is the standard Tchebysheff polynomial of degree n $(n = 0,1,\ldots)$.

Then given any $t \in G$ there exists a spherical neighborhood $V_t(0)$ of 0 in the z-plane such that

$$\frac{1}{\sqrt{2}}\,\frac{\sqrt{1-tz+\sqrt{1-2tz+z^2}}}{\sqrt{1-2tz+z^2}} = \sum_{n=0}^{+\infty} \frac{1}{4^n}\binom{2n}{2} T_n(t)z^n \qquad \underline{\text{for all}}\ \ z \in V_t(0)$$

<u>where</u> $\sqrt{w}$ <u>denotes the principal value of the square root.</u>

<u>7. Theorem</u>. <u>Suppose:</u>

1) $G = K - (-\infty,-1] - [1,+\infty)$.

2) U_n <u>is the standard conjugate Tchebysheff polynomial of degree</u> n $(n = 0,1,\ldots)$.

<u>Then given any</u> $t \in G$ <u>there exists a spherical neighborhood</u> $V_t(0)$ <u>of</u> 0 <u>in the</u> z-<u>plane such that</u>

$$\frac{\sqrt{2}}{\sqrt{1-tz+\sqrt{1-2tz+z^2}}}\,\frac{1}{\sqrt{1-2tz+z^2}} = \sum_{n=0}^{+\infty} \frac{1}{4^n}\binom{2n+1}{n} U_n(t)z^n$$

<u>for all</u> $z \in V_t(0)$,

<u>where</u> $\sqrt{w}$ <u>denotes the principal value of the square root.</u>

<u>Proof</u>. By 4. for $\alpha = \frac{1}{2}$ and 10.8, given any t G there exists a spherical neighborhood $V_t(0)$ of 0 in the z-plane such that

$$\frac{\sqrt{2}}{\sqrt{1-tz+\sqrt{1-2tz+z^2}}}\,\frac{1}{\sqrt{1-2tz+z^2}} \overset{4.\text{ for }\alpha=\frac{1}{2}}{=} \sum_{n=0}^{+\infty} P_n^{(\frac{1}{2})}(t)z^n \overset{10.8}{=}$$

$$\overset{10.8}{=} \sum_{n=0}^{+\infty} \frac{1}{4^n}\binom{2n+1}{n} U_n(t)z^n \qquad \text{for all}\ \ z \in V_t(0),$$

where $\sqrt{w}$ denotes the principal value of the square root.

8. Theorem. Suppose:

1) $G = K - (-\infty, 0]$.

2) $L_n^{(\alpha)}$ is the standard Laguerre polynomial of degree n with index $\alpha \in (-1, +\infty)$ $(n = 0, 1, \ldots)$.

Then

$$(1) \qquad \frac{e^{\frac{tz}{1+z}}}{(1+z)^{\alpha+1}} = \sum_{n=0}^{+\infty} \frac{1}{n!} L_n^{(\alpha)}(t)\, z^n \qquad \text{for all } t \in G,\ |z| < 1,$$

where $(1+z)^{\alpha+1}$ denotes the principal value of the corresponding multivalued function.

Proof. By 1), 6.3 and 6.8, the Laguerre polynomials with index $\alpha \in (-1, +\infty)$ have the classical weight function

$$(2) \qquad w(t) = t^{\alpha} e^{-t} \qquad \text{for all } t \in G,$$

where t^{α} denotes the principal value of the corresponding power. Using the notation in 6.1 it follows from 6.3 that

$$(3) \qquad w_2(t) = t; \text{ hence } w_{2,0} = 0,\ w_{2,1} = 1,\ w_{2,2} = 0,\ w_2'(t) = 1.$$

Therefore, by 1.,

$$(4) \qquad \xi_1(t,z) = \frac{t + w_{2,0} z}{1 - w_{2,1} z} = \frac{t}{1-z} \quad \text{for } t \in K,\ |z| \overset{(3)}{=} |w_{2,1} z| < 1.$$

Fix any $t \in G$. Then, by (2),(3),(4) and 1., there exists a spherical neighborhood $U_t(0)$ of 0 in the z-plane such that

$$(5)\qquad \frac{1}{w(t)}\,\frac{w\left[\xi_1(t,z)\right]}{1-z\,w_2'\left[\xi_1(t,z)\right]} = \sum_{n=0}^{+\infty} \frac{L_n^{(\alpha)}(t)}{n!\,\alpha_n}\, z^n \qquad \text{for all } z \in U_t(0),$$

where α_n $(n = 0,1,\ldots)$ are the coefficients in the Rodriguez formula, i.e. by 2) and 10.10

$$(6)\qquad \alpha_n = (-1)^n \qquad (n = 0,1,\ldots).$$

By (2), (3) and (4),

$$(7)\qquad \frac{1}{w(t)}\,\frac{w\left[\xi_1(t,z)\right]}{1-z\,w_2'\left[\xi_1(t,z)\right]} \overset{(2),(4)}{=} \frac{1}{t^{\alpha}\,e^{-t}}\,\frac{\left(\frac{t}{1-z}\right)^{\alpha} e^{-\frac{1}{1-z}}}{1-z} = \frac{e^{-\frac{tz}{1-z}}}{(1-z)^{\alpha+1}}$$

$$\text{for all } t \in K, \quad |z| < 1,$$

where w^{α} again denotes the principal value. Next, by (6),

$$(8)\qquad \sum_{n=0}^{+\infty} \frac{L_n^{(\alpha)}(t)}{n!\,\alpha_n}\, z^n = \sum_{n=0}^{+\infty} \frac{1}{n!}\, L_n^{(\alpha)}(t)\,(-z)^n \qquad \text{for all } z \in U_t(0).$$

Choosing $U_t(0)$ in $|z| < 1$ we obtain by setting (7) and (8) into (5) and then writing $-z$ instead of z

$$\frac{e^{\frac{tz}{1+z}}}{(1+z)^{\alpha}} = \sum_{n=0}^{+\infty} \frac{1}{n!}\, L_n^{(\alpha)}(t)\, z^n \qquad \text{for all } z \in U_t(0).$$

Since the left hand side is a holomorphic function of z at least in the circle $|z| < 1$ the powere series in z on the right-hand side has radius of convergence $r \geq 1$. Hence (1) follows.

9. Theorem. Let H_n be the standard Hermite polynomials of degree n $(n = 0,1,\ldots)$. Then

(1) $$e^{2tz-z^2} = \sum_{n=0}^{+\infty} \frac{1}{n!} H_n(t)\, z^n \qquad \text{for all} \quad t, z \in K.$$

Proof. By 6.3 and 6.8, the Hermite polynomials have the classical weight function

(2) $$w(t) = e^{-t^2} \qquad \text{for all} \quad t \in K.$$

Using the notation in 6.1 it follows from 6.3 that

(3) $$w_2(t) = 1; \quad \text{hence} \quad w_{2,0} = 1, \quad w_{2,1} = w_{2,2} = 0, \quad w_2'(t) = 0.$$

Therefore, by 1.,

(4) $$\xi_1(t,z) = \frac{t + w_{2,0}z}{1 - w_{2,1}z} = t + z \qquad \text{for} \quad t \in K, \ |\underbrace{w_{2,1}}_{=0} z| < 1, \text{ i.e. for } t,z \in K.$$

Fix any $t \in K$. Then, by (2), (3), (4) and 1., there exists a spherical neighborhood $U_t(0)$ of 0 in the z-plane such that

(5) $$\frac{1}{w(t)} \frac{w[\xi_1(t,z)]}{1-z\, w_2'[\xi_1(t,z)]} = \sum_{n=0}^{+\infty} \frac{H_n(t)}{n!\,\alpha_n} z^n \qquad \text{for all} \quad z \in U_t(0),$$

where α_n $(n = 0,1,\ldots)$ are the coefficients in the Rodriguez formula, i.e. by 10.12,

(6) $$\alpha_n = (-1)^n \quad (n = 0,1,\ldots).$$

By (2), (3), and (4),

$$(7)\quad \left\{ \frac{1}{w(t)} \frac{w[\xi_1(t,z)]}{1-z\, w_2'[\xi_1(t,z)]} \overset{(2),(4)}{=} \frac{1}{e^{-t^2}} e^{-(t+z)^2} = e^{-2tz-z^2} \right.$$

$$\text{for all } z \in K.$$

By (6),

$$(8)\qquad \sum_{n=0}^{+\infty} \frac{H_n(t)}{n!\,\alpha_n} z^n = \sum_{n=0}^{+\infty} \frac{1}{n!} H_n(t)\,(-z)^n \qquad \text{for all} \quad z \in U_t(0).$$

Setting (7) and (8) into (5) and then writing $-z$ instead of z we obtain

$$e^{2tz-z^2} = \sum_{n=0}^{+\infty} \frac{1}{n!} H_n(t)\, z^n \qquad \text{for all} \quad z \in U_t(0).$$

Since the left-hand side is a holomorphic function of z for all $z \in K$ the power series in z on the right-hand side has radius of convergence $r = +\infty$. Hence (1) follows.

<u>10. Remarks</u>. The result in 1. is new. In other books e.g. in Szegö (14), the generating functions for the Jacobi, Laguerre and Hermite polynomials are investigated separately.

If we had omitted the theorem in 6.6 because of its long proof, and so had not had its consequence 6.8 at our disposal, we would have had to assume explicitly that the classical weight function w had a holomorphic extension $w(t) \neq 0$ for all $t \in G = K - [(-\infty,+\infty) - (a,b)]$.

Different generating functions for the Gegenbauer and Tchebysheff polynomials are investigated in Szego (14). Some other generating functions for the Jacobi and Bessel polynomials are given in a recent paper by Verma and Prasad (34).

§ 14. Expansion theorems, maximality and completeness for some systems of orthogonal polynomials

1. Theorem. Suppose:

1) $-\infty < a < b < +\infty$.

2) $0 < w(t) < +\infty$ for a.a. $t \in (a,b)$.

3) $\int_a^b w(t)dt < +\infty$.

(By 1), 2) and 3.2, w is a weight function on (a,b). By 1), $\int_a^b t^k w(t)dt$ = finite for all $k = 0,1,\ldots$).

4) y_k is a polynomial of degree k with real coefficients $(k = 0,1,\ldots)$.

5) $y_0, y_1, \ldots$ is an orthogonal system on (a,b) with respect to w.

(By 5.2, such polynomials $y_0, y_1, \ldots$ exist, and each of them is uniquely determined up to an arbitrary non-zero factor.)

Then the following holds:

I. If $f \in L_w^2(a,b)$ and $c_k(f)$ are the Fourier coefficients of f with respect to y_k $(k = 0,1,\ldots)$ (see 1.16 and 3.9), then

$$f = \sum_{k=0}^{+\infty} c_k(f)\, y_k \text{ in the } L_w^2(a,b)\text{-norm.}$$

II. Under the assumptions of I, the Parceval equality holds:

$$\| f \|^2_{L^2_w(a,b)} = \sum_{k=0}^{+\infty} |c_k(f)|^2 \, \| y_k \|^2_{L^2_w(a,b)} .$$

III. If $f,g \in L^2_w(a,b)$ and $c_k(f)$, $c_k(g)$ are the Fourier coefficients of f,g with respect to y_k $(k = 0,1,\ldots)$ (see 1.16 and 3.9) the generalized Parceval equality holds:

$$\int_a^b f(t)\,\overline{g(t)}\,w(t)dt = \sum_{k=0}^{+\infty} c_k(f)\,\overline{c_k(g)}\,\| y_k \|^2_{L^2_w(a,b)} .$$

IV. The system $y_0, y_1, \ldots$ is maximal (see 1.25 and 3.9!).

V. The system $y_0, y_1, \ldots$ is closed in the $L^2_w(a,b)$-norm (see 1.27 and 3.9!).

Proof. Defining $(f,g) = \int_a^b f(t)\,\overline{g(t)}\,w(t)dt$ for all $f,g \in L^2_w(a,b)$ it follows from 3.9 that $L^2_w(a,b)$ is a Hilbert space with the standard norm $\| f \|_{L^2_w(a,b)} = (f,f)^{\frac{1}{2}} = \left[\int_a^b |f(t)|^2 \, w(t)dt \right]^{\frac{1}{2}}$ for all $f \in L^2_w(a,b)$. Therefore, by 1.16, for each $f \in L^2_w(a,b)$ the Fourier coefficients $c_k(f)$ of f with respect to y_k are defined by

$$c_k(f) = \frac{1}{\| y_k \|^2_{L^2_w(a,b)}} (f,y_k) \overset{4)}{=} \frac{1}{\| y_k \|^2_{L^2_w(a,b)}} \int_a^b f(t)\, y_k(t)\, w(t)dt \quad (k = 0,1,\ldots$$

Now fix any real or complex $f \in L^2_w(a,b)$, and any $\varepsilon \in (0,+\infty)$. Then, by 4.1, there exists a polynomial p with real or complex coefficients such that $\| f-p \|_{L^2_w(a,b)} < \varepsilon$. By 5.1, there exist a non-negative integer n and real or complex constants $c_0,\dots,c_n$ such that $p(t) = \sum_{k=0}^{n} c_k\, y_k(t)$ for all complex t. Hence $\| f - \sum_{k=0}^{n} c_k\, y_k \|_{L^2_w(a,b)} < \varepsilon$. Therefore, by 1.27, the system $y_0, y_1, \dots$ is closed in the $L^2_w(a,b)$-norm, which proves V. But then 2.4 implies I.-IV.

2. Remark. In particular, the preceding theorem holds if $(a,b) = (-1,1)$, $w(t) = (1-t)^{\alpha}\,(1+t)^{\beta}$ for all $t \in (-1,1)$ and any fixed $\alpha,\beta \in (-1,+\infty)$, i.e. by 5.3, if y_k is a Jacobi polynomial of degree k $(k = 0,1,\dots)$.

3. Theorem. Suppose:

1) $\alpha \in (-1,+\infty)$.

2) $w(t) = t^{\alpha}\, e^{-t}$ for all $t \in (0,+\infty)$.

3) f is a real (complex) function such that $f \in L^2_w(0,+\infty)$.

Then given any $\varepsilon \in (0,+\infty)$ there exists a polynomial P with real (complex) coefficients such that $\| f-P \|_{L^2_w(0,+\infty)} < \varepsilon$.

Proof. Let

(1) $$W(y) = (\log \frac{1}{y})^{\alpha} \qquad \text{for all } y \in (0,1).$$

Then obviously

(2) $$0 < W(y) < +\infty \qquad \text{for all} \qquad y \in (0,1),$$

$$\int_0^1 W(y)dy \overset{(1)}{=} \int_0^1 (\log \tfrac{1}{y})^\alpha \, dy = \left| \begin{array}{l} y = e^{-t} \\ t = -\log y = \log \frac{1}{y} \\ dy = -e^{-t}\, dt \end{array} \quad \begin{array}{c|c} y & t \\ \hline 0 & +\infty \\ 1 & 0 \end{array} \right| =$$

(3)
$$= \int_0^{+\infty} t^\alpha e^{-t}\, dt \overset{1)}{<} +\infty$$

so that, by 3.1, W is a weight function on $(0,1)$. By the same substitution as in (3)

$$\int_0^1 \left| f(\log \tfrac{1}{y}) \right|^2 W(y)\, dy \overset{(1)}{=} \int_0^1 \left| f(\log \tfrac{1}{y}) \right|^2 (\log \tfrac{1}{y})^\alpha \, dy \overset{\text{subst.}}{=}$$

$$\overset{\text{subst.}}{=} \int_0^{+\infty} |f(t)|^2 t^\alpha e^{-t}\, dt \overset{3)}{<} +\infty$$

so that $f(\log \frac{1}{y}) \in L^2_W(0,1)$. Therefore, by 4.1, given any $\varepsilon \in (0,+\infty)$ there exists a polynomial with real (complex) coefficients, say

(4) $$P_1(y) = \sum_{k=0}^{p} a_k y^k,$$

such that

$$(5) \qquad \int_0^1 \left| f(\log \tfrac{1}{y}) - P_1(y) \right|^2 W(y)dy < \tfrac{1}{4} \varepsilon^2 .$$

Hence follows, by the same substitution as in (3), that

$$(6) \quad \begin{cases} \displaystyle\int_0^{+\infty} \left| f(t) - P_1(e^{-t}) \right|^2 t^{\alpha} e^{-t}\, dt = \int_0^1 \left| f(\log \tfrac{1}{y}) - P_1(y) \right|^2 (\log \tfrac{1}{y})^{\alpha}\, dy = \\ \displaystyle = \int_0^1 \left| f(\log \tfrac{1}{y}) - P_1(y) \right|^2 W(y)\, dy \overset{(5)}{<} \tfrac{1}{4} \varepsilon^2 . \end{cases}$$

Let $L_m^{(\alpha)}$ be the standard Laguerre polynomial of degree $m = 0,1,\ldots$ with index α (see 10.10!). By theorem 13.8 concerning the generating function

$$(7) \qquad \frac{e^{\frac{tz}{1+z}}}{(1+z)^{\alpha}} = \sum_{m=0}^{+\infty} \frac{1}{m!} L_m^{(\alpha)}(t)\, z^m \qquad \text{for all} \quad t \in K - (-\infty,0] \ , \ |z| < 1.$$

Fix any $k = 0,1,\ldots,$ and set $z = -\frac{k}{k+1}$ into (7). This is permissible because then $|z| < 1$. Since $1+z = 1 - \frac{k}{k+1} = \frac{1}{k+1}$, $\frac{z}{1+z} = \frac{-\frac{k}{k+1}}{\frac{1}{k+1}} = -k$, we obtain

$$(8) \quad \begin{cases} \displaystyle e^{-kt} = \frac{1}{(k+1)^{\alpha}} \sum_{m=0}^{+\infty} \frac{(-1)^m}{m!} \left(\frac{k}{k+1} \right)^m L_m^{(\alpha)}(t) \\ \qquad \text{for all} \quad t \in K - (-\infty,0], \quad k = 0,1,\ldots \ . \end{cases}$$

Next fix any $n = 0,1,\ldots$. Then, by (8), Fatou's lemma, the orthogonality of $L_m^{(\alpha)}$ with respect to w, and 10.11,

$$\int_0^{+\infty} \left| e^{-kt} - \frac{1}{(k+1)^\alpha} \sum_{m=0}^{n} \frac{(-1)^m}{m!} \left(\frac{k}{k+1}\right)^m L_m^{(\alpha)}(t) \right|^2 t^\alpha e^{-t}\, dt \overset{(8)}{=}$$

$$\overset{(8)}{=} \int_0^{+\infty} \left| \frac{1}{(k+1)^\alpha} \sum_{m=n+1}^{+\infty} \frac{(-1)^m}{m!} \left(\frac{k}{k+1}\right)^m L_m^{(\alpha)}(t) \right|^2 t^\alpha e^{-t}\, dt =$$

$$= \frac{1}{(k+1)^{2\alpha}} \int_0^{+\infty} \lim_{p\to+\infty} \underbrace{\left[\sum_{m=n+1}^{p+1} \frac{(-1)^m}{m!} \left(\frac{k}{k+1}\right)^m L_m^{(\alpha)}(t) \right]^2 t^\alpha e^{-t}}_{\geq 0}\, dt \overset{\text{Fatou's lemma}}{\leq}$$

$$\overset{\text{Fatou's l.}}{\leq} \frac{1}{(k+1)^{2\alpha}} \liminf_{p\to+\infty} \int_0^{+\infty} \left[\sum_{m=n+1}^{p+1} \frac{(-1)^m}{m!} \left(\frac{k}{k+1}\right)^m L_m^{(\alpha)}(t) \right]^2 t^\alpha e^{-t}\, dt =$$

$$\overset{L_m^{(\alpha)} = \text{ orth. w.r. to } w}{=} \frac{1}{(k+1)^{2\alpha}} \liminf_{p\to+\infty} \int_0^{+\infty} \sum_{m=n+1}^{p+1} \frac{1}{(m!)^2} \left(\frac{k}{k+1}\right)^{2m} \left[L_m^{(\alpha)}(t) \right]^2 t^\alpha\, d^{-t}$$

$$= \frac{1}{(k+1)^{2\alpha}} \liminf_{p\to+\infty} \sum_{m=n+1}^{p+1} \frac{1}{(m!)^2} \left(\frac{k}{k+1}\right)^{2m} \| L_m^{(\alpha)} \|^2_{L_w^2(0,+\infty)} \overset{10.11}{=}$$

$$\overset{10.11}{=} \frac{1}{(k+1)^{2\alpha}} \liminf_{p\to+\infty} \sum_{m=n+1}^{p+1} \left(\frac{k}{k+1}\right)^{2m} \frac{\Gamma(m+\alpha+1)}{m!} \leq \frac{1}{(k+1)^{2\alpha}} \lim_{p\geq n} \sum_{m=n+1}^{p+1} \left(\frac{k}{k+1}\right)^{2m} \frac{\Gamma(m+\alpha+1)}{m!}$$

$$\leq \frac{1}{(k+1)^{2\alpha}} \sum_{m=n+1}^{+\infty} \underbrace{\left(\frac{1}{k+1}\right)^{2m} \frac{\Gamma(m+\alpha+1)}{m!}}_{= a_m \geq 0}$$

Since, by 6.9,

$$\lim_{m\to+\infty} \frac{a_{m+1}}{a_m} = \lim_{m\to+\infty} \frac{\left(\frac{k}{k+1}\right)^{2m+2} \frac{\Gamma(m+\alpha+2)}{(m+1)!}}{\left(\frac{k}{k+1}\right)^{2m} \frac{\Gamma(m+\alpha+1)}{m!}} \overset{6.9}{=}$$

$$\overset{6.9}{=} \left(\frac{k}{k+1}\right)^2 \lim_{m\to+\infty} \frac{m+\alpha+1}{m+1} = \left(\frac{k}{k+1}\right)^2 < 1$$

for all $k = 0,1,\ldots$,

it follows from the ratio test that the series on the right-hand side of (9) converges absolutely for all $k = 0,1,\ldots$. Consequently, by (9), any $k = 0,1,\ldots,$ $\varepsilon \in (0,+\infty)$ fixed there exists a non-negative integer $n_k(\varepsilon)$ such that

$$\int_0^{+\infty} \left| e^{-kt} - \frac{1}{(k+1)^\alpha} \sum_{m=0}^{n} \frac{(-1)^m}{m!} \left(\frac{k}{k+1}\right)^m L_m^{(\alpha)}(t)\right|^2 t^\alpha e^{-t}\, dt < \frac{\frac{1}{4}\varepsilon^2}{(p+1)\left(\sum_{k=0}^{p} |a_k|^2 + 1\right)}$$

for all $n \geq n_k(\varepsilon)$, $k = 0,1,\ldots,$

where p and $a_0,\ldots,a_p$ are the degree and the coefficients of the polynomial P_1 in (4). In particular, choosing $n = n_k(\varepsilon)$ in the preceding formula we see that if any $k = 0,1,\ldots,$ $\varepsilon \in (0,+\infty)$ are fixed there exists a polynomial $P_{n_k(\varepsilon)}$ of degree $n_k(\varepsilon)$ with real coefficients such that

$$(10) \quad \left\{ \begin{array}{l} \displaystyle\int_0^{+\infty} \left| e^{-kt} - P_{n_k(\varepsilon)}(t)\right|^2 t^\alpha e^{-t}\, dt < \frac{\frac{1}{4}\varepsilon^2}{(p+1)\left(\sum_{k=0}^{p} |a_k|^2 + 1\right)} \\ \qquad \text{for } k = 0,1,\ldots . \end{array} \right.$$

Consider now the polynomial

$$(11) \qquad P(t) = \sum_{k=0}^{p} a_k P_{n_k(\varepsilon)}(t) \qquad \text{for all complex } t.$$

Then by (4), (11), the Holder inequality for sums, and (10),

$$\int_0^{+\infty} |P_1(e^{-t}) - P(t)|^2 t^\alpha e^{-t} dt \overset{(4),(11)}{=} \int_0^{+\infty} \Big| \sum_{k=0}^{p} a_k e^{-kt} - \sum_{k=0}^{p} a_k P_{n_k(\varepsilon)}(t) \Big|^2 t^\alpha e^{-t} dt \leq$$

$$\leq \int_0^{+\infty} \Big| \sum_{k=0}^{p} a_k \left[e^{-kt} - P_{n_k(\varepsilon)}(t) \right] \Big|^2 t^\alpha e^{-t} dt \leq \int_0^{+\infty} \Big[\sum_{k=0}^{p} |a_k| \, | e^{-kt} - P_{n_k(\varepsilon)}(t) | \Big]^2 t^\alpha e^{-t}$$

$$\overset{\text{Hölder for sums}}{\leq} \int_0^{+\infty} \underbrace{\Big(\sum_{k=0}^{p} 1^2 \Big)}_{= p+1} \Big[\sum_{k=0}^{p} |a_k|^2 \, | e^{-kt} - P_{n_k(\varepsilon)}(t) |^2 \Big] t^\alpha e^{-t} dt =$$

$$= (p+1) \sum_{k=0}^{p} |a_k|^2 \int_0^{+\infty} | e^{-kt} - P_{n_k(\varepsilon)}(t) |^2 t^\alpha e^{-t} dt \overset{(10)}{<} \frac{1}{4} \varepsilon^2.$$

Consequently, by the Minkowski inequality, (6) and (12),

$$\| f - P \|_{L^2_w(0,+\infty)} \overset{\text{Minkowski}}{\leq} \| f(t) - P_1(e^{-t}) \|_{L^2_w(0,+\infty)} + \| P_1(e^{-t}) - P(t) \|_{L^2_w(0,+\infty)} =$$

$$= \Big[\int_0^{+\infty} | f(t) - P_1(e^{-t}) |^2 t^\alpha e^{-t} dt \Big]^{\frac{1}{2}} + \Big[\int_0^{+\infty} | P_1(e^{-t}) - P(t) |^2 t^2 e^{-t} dt \Big]^{\frac{1}{2}} \overset{(6),(12)}{<}$$

$$\overset{(6),(12)}{<} \frac{1}{2} \varepsilon + \frac{1}{2} \varepsilon = \varepsilon ,$$

which completes the proof.

5. Theorem. Let f be a real (complex) function such that $f \in L^2_{e^{-t^2}}(-\infty,+\infty)$. Then given any $\varepsilon \in (0,+\infty)$ there exists a polynomial P with real (complex) coefficients such that $\| f-P \|_{L^2_{e^{-t^2}}(-\infty,+\infty)} < \varepsilon$.

Proof. Set

$$(1)\quad \begin{cases} f_1(t) = \dfrac{f(t)+f(-t)}{2} & \text{for all } t \in (-\infty,+\infty), \\ f_2(t) = \begin{cases} = 0 & \text{for } t = 0, \\ = \dfrac{f(t)-f(-t)}{2t} & \text{for all } 0 \neq t \in (-\infty,+\infty). \end{cases} \end{cases}$$

Then

(2) f_1, f_2 are real (complex) and even functions on $(-\infty,+\infty)$

(3) $f(t) = f_1(t) + t\, f_2(t)$ for all $0 \neq t \in (-\infty,+\infty)$.

Since, by assumption, $f(t)$, $f(-t) \in L^2_{e^{-t^2}}(-\infty,+\infty)$ it follows from (1) by the Minkowski inequality that also

(4) $f_1(t),\ t\, f_2(t) \in L^2_{e^{-t^2}}(-\infty,+\infty)$.

Next, by (2) and (4),

$$\int_0^{+\infty} |f_1(\tau^{\frac{1}{2}})|^2 \, \tau^{-\frac{1}{2}} e^{-\tau} \, d\tau = \left| \begin{array}{l} \tau^{\frac{1}{2}} = t \\ \tau = t^2 \\ d\tau = 2t \, dt \end{array} \quad \begin{array}{c|c} \tau & t \\ \hline 0 & 0 \\ +\infty & +\infty \end{array} \right| =$$

$$= 2 \int_0^{+\infty} |f_1(t)|^2 e^{-t^2} \, dt \overset{(2)}{=} \int_{-\infty}^{+\infty} |f_1(t)|^2 e^{-t^2} \, dt \overset{(4)}{<} +\infty,$$

and using the same substitution

$$\int_0^{+\infty} |f_2(\tau^{\frac{1}{2}})|^2 \, \tau^{\frac{1}{2}} e^{-\tau} \, d\tau = 2 \int_0^{+\infty} t^2 |f_2(t)|^2 e^{-t^2} \, dt \overset{(2)}{=}$$

$$\overset{(2)}{=} \int_{-\infty}^{+\infty} |t \, f_2(t)|^2 e^{-t^2} \, dt \overset{(4)}{<} +\infty,$$

in other words

(5) $$f_1(\tau^{\frac{1}{2}}) \in L^2_{\tau^{-\frac{1}{2}} e^{-\tau}}(0,+\infty), \quad f_2(\tau^{\frac{1}{2}}) \in L^2_{\tau^{-\frac{1}{2}} e^{-\tau}}(0,+\infty).$$

By (5) and 4. with $\alpha = -\frac{1}{2}$, given any $\varepsilon \in (0,+\infty)$ there exists a polynomial P_1 with real (complex) coefficients such that

(6) $$\| f_1(\tau^{\frac{1}{2}}) - P_1(\tau) \|_{L^2_{\tau^{-\frac{1}{2}} e^{-\tau}}(0,+\infty)} < \frac{1}{2} \varepsilon.$$

By (5) and 4. with $\alpha = \frac{1}{2}$, given any $\varepsilon \in (0,+\infty)$ there exists a polynomial P_2 with real (complex) coefficients such that

$$(7) \qquad \| f_2(\tau^{\frac{1}{2}}) - P_2(\tau) \|_{L^2_{\tau^{\frac{1}{2}} e^{-\tau}}(0,+\infty)} < \frac{1}{2}\varepsilon .$$

Set

$$(8) \qquad P(t) = P_1(t^2) + t\, P_2(t^2) \qquad \text{for all complex } t.$$

Then P is a polynomial with real (complex) coefficients such that

$$\| f(t)-P(t) \|_{L^2_{e^{-t^2}}(-\infty,+\infty)} \overset{(3),(8)}{=} \| [f_1(t) + t\, f_2(t)] - [P_1(t^2)+t\, P_2(t^2)] \|_{L^2_{e^{-t^2}}(-\infty,+\infty)}$$

$$\overset{\text{Minkowski}}{\leq} \| f_1(t)- P_1(t^2) \|_{L^2_{e^{-t^2}}(-\infty,+\infty)} + \| t\, [f_2(t)- P_2(t^2)] \|_{L^2_{e^{-t^2}}(-\infty,+\infty)} =$$

$$= \Big[\int_{-\infty}^{+\infty} \underbrace{|f_1(t)}_{\substack{\text{even}\\ \text{by (2)}}} - \underbrace{P_1(t^2)}_{\text{even}}|^2 \underbrace{e^{-t^2}}_{\text{even}}\, dt \Big]^{\frac{1}{2}} + \Big[\int_{-\infty}^{+\infty} \underbrace{t^2}_{\text{even}} \underbrace{|f_2(t)}_{\substack{\text{even}\\ \text{by (2)}}} - \underbrace{P_2(t^2)}_{\text{even}}|^2 \underbrace{e^{-t^2}}_{\text{even}}\, dt \Big]^{\frac{1}{2}} =$$

$$= \Big[2 \int_{0}^{+\infty} |f_1(t) - P_1(t^2)|^2 e^{-t^2}\, dt \Big]^{\frac{1}{2}} + \Big[2 \int_{0}^{+\infty} t^2 |f_2(t) - P_2(t^2)|^2 e^{-t^2}\, dt \Big]^{\frac{1}{2}} =$$

$$= \left| \begin{array}{l} t^2 = \tau \\ t = \tau^{\frac{1}{2}} \\ dt = \frac{1}{2}\tau^{-\frac{1}{2}} d\tau \end{array} \quad \begin{array}{c|c} t & \tau \\ \hline 0 & 0 \\ +\infty & +\infty \end{array} \right| = \Big[\int_{0}^{+\infty} |f_1(\tau^{\frac{1}{2}}) - P_1(\tau)|^2 \tau^{-\frac{1}{2}} e^{-\tau}\, d\tau \Big]^{\frac{1}{2}} +$$

$$+ \left[\int_0^{+\infty} \left| f_2(\tau^{\frac{1}{2}}) - P_2(\tau) \right|^2 \tau^{\frac{1}{2}} e^{-\tau} \, d\tau \right]^{\frac{1}{2}} = \left\| f_1(\tau^{\frac{1}{2}}) - P_1(\tau) \right\|_{L^2_{\tau^{-\frac{1}{2}} e^{-\tau}}(0,+\infty)}$$

$$+ \left\| f_2(\tau^{\frac{1}{2}}) - P_2(\tau) \right\|_{L^2_{\tau^{\frac{1}{2}} e^{-\tau}}(0,+\infty)} \overset{(6),(7)}{<} \varepsilon ,$$

which completes the proof.

<u>6. Theorem</u>. <u>Suppose</u>:

1) $-\infty \leq a < b \leq +\infty$.

2) w <u>is a classical weight function on</u> (a,b) (see 6.1.).

3) f <u>is a real (complex) function such that</u> $f \in L^2_w(a,b)$.

<u>Then given any</u> $\varepsilon \in (0,+\infty)$ <u>there exists a polynomial</u> p <u>with real (complex) coefficients such that</u> $\| f - p \|_{L^2_w(a,b)} < \varepsilon$.

<u>Proof</u>. Only three cases are possible:

I. $-\infty < a < b < +\infty$. Then everything follows from 4.1.

II. $-\infty = a < b < +\infty$ or $-\infty < a < b = +\infty$. Then, by II. in 6.6, there exist $C \in (0,+\infty)$, $\alpha \in (-1,+\infty)$ and a linear transformation $u = L(t) = \ell_1 t + \ell_2$ of $(-\infty,+\infty)$ onto itself (so that $\ell_1 \neq 0$) such that

(1) $$L((a,b)) = (0,+\infty), \quad w(t) = C\, L^{\alpha}(t)\, e^{-L(t)} \quad \text{for all } t \in (a,b).$$

Let $t = L_{-1}(u)$ be the inverse linear transformation of $(-\infty,+\infty)$ onto itself so that $t = \dfrac{u-\ell_2}{\ell_1}$ for all $u \in (-\infty,+\infty)$. Then by (1)

$$(2)\quad \begin{cases} L_{-1}((0,+\infty)) = (a,b), \quad W(u) \overset{\text{def.}}{=} \dfrac{1}{C}\, w\left[L_{-1}(u)\right] \overset{(1)}{=} u^{\alpha} e^{-u} \\ \text{for all } u \in (0,+\infty). \end{cases}$$

By (2) and 3),

$$(3)\quad \begin{cases} \displaystyle\int_0^{+\infty} \left| f\left[L_{-1}(u)\right]\right|^2 u^{\alpha} e^{-u}\, du \overset{(2)}{=} \frac{1}{C} \int_0^{+\infty} \left| f\left[L_{-1}(u)\right]\right|^2 w\left[L_{-1}(u)\right] du = \\ = \left| \begin{array}{l} L_{-1}(u) = t \\ u = L(t) = \ell_1 t + \ell_2 \\ du = \ell_1\, dt \end{array} \right| = \dfrac{|\ell_1|}{C} \displaystyle\int_a^b |f(t)|^2 w(t)\, dt = \text{finite.} \end{cases}$$

By (3) and 4., there exists a polynomial P with real (complex) coefficients such that

$$(4)\qquad \left\| f\left[L_{-1}(u)\right] - P(u)\right\|^2_{L^2_{u^{\alpha}e^{-u}}(0,+\infty)} < \frac{|\ell_1|}{C}\, \varepsilon^2.$$

Then $p(t) = P\left[L(t)\right]$ is a polynomial with real (complex) coefficients such that

$$\| f(t) - p(t) \|^2_{L^2_w(a,b)} = \int_a^b |f(t) - p(t)|^2 w(t)dt = \int_a^b |f(t) - P[L(t)]|^2 w(t)\, dt =$$

$$= \left| \begin{array}{l} t = L_{-1}(u) = \frac{1}{\ell_1}(u - \ell_2) \\ L(t) = u \\ dt = \frac{1}{\ell_1}\, du \end{array} \right| = \frac{1}{|\ell_1|} \int_0^{+\infty} |f[L_{-1}(u)] - P(u)|^2 w[L_{-1}(u)]\, du$$

$$\overset{(2)}{=} \frac{C}{|\ell_1|} \int_0^{+\infty} |f[L_{-1}(u)] - P(u)|^2 u^\alpha e^{-u} du = \frac{C}{|\ell_1|} \| f[L_{-1}(u)] - P(u) \|^2_{L^2_{u^\alpha e^{-u}}(0,+\infty)} \overset{(4)}{<}$$

III. $a = -\infty$ and $b = +\infty$. Then, by III. in 6.6, there exist $C \in (0,+\infty)$ and a linear transformation $u = L(t) = \ell_1 t + \ell_2$ of $(a,b) = (-\infty,+\infty)$ onto itself (so that $\ell_1 \neq 0$) such that

(5) $$w(t) = C\, e^{-L^2(t)} \qquad \text{for all } t \in (a,b) = (-\infty,+\infty).$$

Let $t = L_{-1}(u)$ be the inverse linear transformation of $(-\infty,+\infty)$ onto itself so that $t = \frac{u - \ell_2}{\ell_1}$ for all $u \in (-\infty,+\infty)$. Set

(6) $$W(u) = \frac{1}{C}\, w[L_{-1}(u)] \overset{(5)}{=} e^{-u^2} \qquad \text{for all } u \in (-\infty,+\infty),$$

By (6) and 3),

$$(7)\quad \begin{cases} \displaystyle\int_{-\infty}^{+\infty} \left| f\left[L_{-1}(u)\right]\right|^2 e^{-u^2} du \overset{(6)}{=} \frac{1}{C} \int_{-\infty}^{+\infty} \left| f\left[L_{-1}(u)\right]\right|^2 w\left[L_{-1}(u)\right] du = \\ \\ = \left| \begin{array}{l} L_{-1}(u) = t \\ u = L(t) = \ell_1 t + \ell_2 \\ du = \ell_1 dt \end{array} \right| = \dfrac{|\ell_1|}{C} \displaystyle\int_{-\infty}^{+\infty} |f(t)|^2 w(t)dt \overset{3)}{=} \text{finite.} \end{cases}$$

By (7) and 5., there exists a polynomial P with real (complex) coefficients such that

$$(8)\qquad \left\| f\left[L_{-1}(u)\right] - P(u)\right\|^2_{L^2_{e^{-u^2}}(-\infty,+\infty)} < \frac{|\ell_1|}{C}\, \varepsilon^2 .$$

Then $p(t) = P\left[L(t)\right]$ is a polynomial with real (complex coefficients such that

$$\|f-p\|^2_{L^2_w(-\infty,+\infty)} = \int_{-\infty}^{+\infty} |f(t) - p(t)|^2 w(t)dt = \int_{-\infty}^{+\infty} \left|f(t) - P\left[L(t)\right]\right|^2 w(t)dt =$$

$$= \left| \begin{array}{l} t = L_{-1}(u) = \dfrac{u-\ell_2}{\ell_1} \\ \\ L(t) = u \\ \\ dt = \dfrac{1}{\ell_1} du \end{array} \right| = \frac{1}{|\ell_1|} \int_{-\infty}^{+\infty} \left| f\left[L_{-1}(u)\right] - P(u)\right|^2 w\left[L_{-1}(u)\right] du \overset{(6)}{=}$$

$$\overset{(6)}{=} \frac{C}{|\ell_1|} \int_{-\infty}^{+\infty} \left| f\left[L_{-1}(u)\right] - P(u)\right|^2 e^{-u^2} du =$$

$$= \frac{C}{|\ell_1|} \left\| f\left[L_{-1}(u)\right] - P(u)\right\|^2_{L^2_{e^{-u^2}}(-\infty,+\infty)} \overset{(8)}{<} \varepsilon^2,$$

which completes the proof.

7. Theorem. Suppose:

1) $-\infty \leq a < b \leq +\infty$.

2) w is a classical weight function on (a,b) (see 6.1!).

3) y_k is a polynomial of degree k with real coefficients $(k = 0,1,\ldots)$.

4) $y_0, y_1, \ldots$ is an orthogonal system on (a,b) with respect to w.

(By 5.2, such polynomials $y_0, y_1, \ldots$ exist, and each of them is uniquely determined up to an arbitrary non-zero real factor.)

Then the following holds:

I. If $f \in L_w^2(a,b)$ and $c_k(f)$ are the Fourier coefficients of f with respect to y_k $(k = 0,1,\ldots)$ (see 1.16 and 3.9), then

$$f = \sum_{k=0}^{+\infty} c_k(f)\, y_k \text{ in the } L_w^2(a,b)\text{-norm.}$$

II. Under the assumption of I., the Parceval equality holds:

$$\| f \|^2_{L_w^2(a,b)} = \sum_{k=0}^{+\infty} |c_k(f)|^2 \, \| y_k \|^2_{L_w^2(a,b)} .$$

III. If $f, g \in L_w^2(a,b)$ and $c_k(f)$, $c_k(g)$ are the Fourier coefficients of f, g with respect to y_k $(k = 0,1,\ldots)$ (see 1.16 and 3.9) then the generalized Parceval equality holds:

$$\int_a^b f(t)\, \overline{g(t)}\, w(t)\, dt = \sum_{k=0}^{+\infty} c_k(f)\, \overline{c_k(g)}\, \| y_k \|^2_{L_w^2(a,b)} .$$

IV. <u>The system</u> $y_0, y_1, \ldots$ <u>is maximal</u> (see 1.25 and 3.9).

V. <u>The system</u> $y_0, y_1, \ldots$ <u>is closed in the</u> $L_w^2(a,b)$-<u>norm</u> (see 1.27 and 3.9).

<u>Proof</u>. Defining $(f,g) = \int_a^b f(t)\,\overline{g(t)}\,w(t)\,dt$ for all $f,g \in L_w^2(a,b)$ it follows from 3.9 that $L_w^2(a,b)$ is a Hilbert space with the standard norm $\|f\|_{L_w^2(a,b)} = (f,f)^{\frac{1}{2}} = \left[\int_a^b |f(t)|^2\,w(t)\,dt\right]^{\frac{1}{2}}$ for all $f \in L_w^2(a,b)$. Therefore, by 1.16, for each $f \in L_w^2(a,b)$ the Fourier coefficients $c_k(f)$ of f with respect to y_k are defined by

$$c_k(f) = \frac{1}{\|y_k\|^2_{L_w^2(a,b)}}(f,y_k) \overset{3)}{=} \frac{1}{\|y_k\|^2_{L_w^2(a,b)}} \int_a^b f(t)\,y_k(t)\,w(t)dt \quad (k = 0,1,\ldots).$$

Now fix any real (complex) $f \in L_w^2(a,b)$, and any $\varepsilon \in (0,+\infty)$. Then, by 6., there exists a polynomial p with real (complex) coefficients such that $\|f-p\|_{L_w^2(a,b)} < \varepsilon$. By 5.1, there exist a non-negative integer n and real (complex) constants $c_0,\ldots,c_n$ such that $p(t) = \sum_{k=0}^{n} c_k\,y_k(t)$ for all complex t. Hence $\|f - \sum_{k=0}^{n} c_k\,y_k\|_{L_w^2(a,b)} < \varepsilon$. Therefore, by 1.27, the system $y_0, y_1, \ldots$ is closed in the $L_w^2(a,b)$-norm, which proves V. But then 2.4 implies I.-IV.

8. Remark. In particular, by 5.3 and 6.3, the results in the preceding theorem hold in the following cases:

1) If $(a,b) = (-1,1)$ and $w(t) = (1-t)^{\beta}(1+t)^{\beta}$ for all $t \in (-1,1)$ and some fixed $\alpha,\beta \in (-1,+\infty)$, i.e. if y_k is a Jacobi polynomial of degree k with indices $\alpha,\beta \in (-1,+\infty)$ $(k = 0,1,\ldots)$.

2) If $(a,b) = (0,+\infty)$ and $w(t) = t^{\alpha}e^{-t}$ for all $t \in (0,+\infty)$ and some fixed $\alpha \in (-1,+\infty)$, i.e. if y_k is the Laguerre polynomial of degree k with index $\alpha \in (-1,+\infty)$ $(k = 0,1,\ldots)$.

3) If $(a,b) = (-\infty,+\infty)$ and $w(t) = e^{-t^2}$ for all $t \in (-\infty,+\infty)$, i.e. if y_k is the Hermite polynomial of degree k $(k = 0,1,\ldots)$.

CHAPTER 3.:

The term-by-term integration and Laplace transformation of the Fourier expansion of $f \in L_w^2(a,b)$ with respect to an orthogonal system in $L_w^2(a,b)$

§ 15. The term-by-term integration of the Fourier expansion in $L_w^2(a,b)$.

1. Lemma. Suppose:

1) $-\infty \leq A < B \leq +\infty$.

2) $0 < w(t) < +\infty$ for a.a $t \in (A,B)$.

3) w is measurable on (A,B).

4) $\int_A^B \frac{dt}{w(t)} < +\infty$.

5) $f \in L_w^2(A,B)$.

Then $f \in L(A,B)$.

Proof. $\int_A^B |f(t)|dt \overset{2)}{=} \int_A^B |f(t)| w^{\frac{1}{2}}(t) \frac{1}{w^{\frac{1}{2}}(t)} dt \overset{\text{Hölder}}{\leq}$

$$\overset{\text{Hölder}}{\leq} \left[\int_A^B |f(t)|^2 w(t)dt\right]^{\frac{1}{2}} \left[\int_A^B \frac{dt}{w(t)}\right]^{\frac{1}{2}} \overset{4),5)}{<} +\infty.$$

2. Theorem. Suppose:

1) $-\infty \leq a \leq A < B \leq b \leq +\infty$.

2) $0 < w(t) < +\infty$ for a.a. $t \in (a,b)$.

3) w <u>is measurable on</u> (a,b).

4) $\int_A^B \frac{dt}{w(t)} < +\infty$.

5) $y_0, y_1, \ldots$ <u>is an orthogonal system on</u> (a,b) <u>with respect to</u> w (see 3.11!) <u>such that</u> $\| y_k \|_{L_w^2(a,b)} > 0$ <u>for</u> $k = 0,1,\ldots$.

6) $f \in L_w^2(a,b)$.

7) $c_k(f)$ <u>is the Fourier coefficient of</u> f <u>with respect to</u> y_k $(k = 0,1,\ldots)$ (see 1.16 and 3.9!) <u>so that</u> $f \sim \sum_{k=0}^{+\infty} c_k(f) y_k$.

<u>Then</u> $\sum_{k=0}^{+\infty} c_k(f) \int_{x_0}^{x} y_k(t)dt$ <u>converges absolutely and uniformly for all</u> $x_0, x \in [A,B]$.

<u>Proof</u>. By 1), 2), 4), 5) and 1., all the integrals in the series converge. Without any loss of generality we may suppose that $A \leq x_0 \leq x \leq B$. Define

$$(1) \qquad g_{x_0,x}(t) = \begin{cases} \frac{1}{w(t)} & \text{for} \quad t \in [x_0, x] , \\ 0 & \text{for} \quad t \in [A, x_0) \cup (x, B] . \end{cases}$$

By (1) and 4),

$$(2) \qquad \| g_{x_0,x} \|^2_{L_w^2(a,b)} = \int_a^b | g_{x_0,x}(t) |^2 w(t)dt \overset{(1)}{=} \int_{x_0}^{x} \frac{dt}{w(t)} \overset{2)}{\leq} \int_A^B \frac{dt}{w(t)} \overset{4)}{<} +\infty$$

so that, by (2), 1.16 and 3.9 and (1), $g_{x_0,x}$ has the Fourier coefficients with respect to $y_0, y_1, \ldots$

$$(3)\quad \begin{cases} c_k(g_{x_0,x}) = \dfrac{1}{\|y_k\|^2_{L^2_w(a,b)}} \displaystyle\int_a^b g_{x_0,x}(t)\,\overline{y_k(t)}\,w(t)dt \overset{(1)}{=} \\[2ex] \overset{(1)}{=} \dfrac{1}{\|y_k\|^2_{L^2_w(a,b)}} \displaystyle\int_{x_0}^{x} \overline{y_k(t)}dt \qquad \text{for} \quad k = 0,1,\ldots \end{cases}$$

By (3) and the Hölder inequality for sums,

$$(4)\quad \begin{cases} \left| \displaystyle\sum_{k=p}^{q} c_k(f) \int_{x_0}^{x} y_k(t)dt \right| \leq \sum_{k=p}^{q} |c_k(f)| \left| \int_{x_0}^{x} y_k(t)dt \right| = \\[2ex] = \displaystyle\sum_{k=p}^{q} |c_k(f)|\, \|y_k\|_{L^2_w(a,b)} \frac{1}{\|y_k\|^2_{L^2_w(a,b)}} \left| \int_{x_0}^{x} \overline{y_k(t)}dt \right| \|y_k\|_{L^2_w(a,b)} \overset{(3)}{=} \\[2ex] \overset{(3)}{=} \displaystyle\sum_{k=p}^{q} |c_k(f)|\, \|y_k\|_{L^2_w(a,b)}\, |c_k(g_{x_0,x})|\, \|y_k\|_{L^2_w(a,b)} \overset{\text{Hölder}}{\leq} \\[2ex] \overset{\text{Hölder}}{\leq} \left[\displaystyle\sum_{k=p}^{q} |c_k(f)|^2 \|y_k\|^2_{L^2_w(a,b)} \right]^{\frac{1}{2}} \left[\sum_{k=p}^{q} |c_k(g_{x_0,x})|^2 \|y_k\|^2_{L^2_w(a,b)} \right]^{\frac{1}{2}} \\[2ex] \qquad \text{for all} \quad 0 \leq p \leq q, \quad A \leq x_0 \leq x \leq B. \end{cases}$$

By 6), (2), the Bessel theorem 1.22 and 4)

$$(5)\qquad \sum_{k=0}^{+\infty} |c_k(f)|^2 \, \|y_k\|^2 \overset{6),1.22}{\leq} \|f\|^2_{L^2_w(a,b)} \overset{6)}{<} +\infty,$$

$$(6)\qquad \begin{cases} \displaystyle\sum_{k=p}^{q} |c_k(g_{x_0,x})|^2 \, \|y_k\|^2_{L^2_w(a,b)} \leq \sum_{k=0}^{+\infty} |c_k(g_{x_0,x})|^2 \, \|y_k\|^2_{L^2_w(a,b)} \overset{(2),1.22}{\leq} \\ \displaystyle \overset{(2),1.22}{\leq} \|g_{x_0,x}\|^2_{L^2_w(a,b)} \overset{(2)}{\leq} \int_A^B \frac{dt}{w(t)} \overset{4)}{<} +\infty \end{cases}$$

for all $0 \leq p \leq q$, $A \leq x_0 \leq x \leq B$.

By (5) and the Bolzano-Cauchy theorem, given any $\varepsilon \in (0,+\infty)$ there exists n_0 independent on x_0, x and such that

$$(7)\qquad \sum_{k=p}^{q} |c_k(f)|^2 \, \|y_k\|^2_{L^2_w(a,b)} < \frac{\varepsilon^2}{\displaystyle\int_A^B \frac{dt}{w(t)} + 1} \qquad \text{for all } n_0 \leq p \leq q.$$

Setting (7) and (6) into (4) we obtain

$$\left| \sum_{k=p}^{q} c_k(f) \int_{x_0}^{x} y_k(t)dt \right| \leq \sum_{k=p}^{q} |c_k(f)| \left| \int_{x_0}^{x} y_k(t)dt \right| < \varepsilon$$

for all $n_0 \leq p \leq q$, $A \leq x_0 \leq x_1 \leq B$.

Hence, again by the Bolzano-Cauchy theorem, the result follows.

3. Theorem. Suppose:

1) $-\infty \leq a \leq A < B \leq b \leq +\infty$.

2) $0 < w(t) < +\infty$ for a.a. $t \in (a,b)$

3) w is measurable on (a,b).

4) $\int_A^B \frac{dt}{w(t)} < +\infty$.

5) $y_0, y_1, \ldots$ is an orthogonal system on (a,b) with respect to w (see 3.11!) such that $\| y_k \|_{L_w^2(a,b)} > 0$ for $k = 0,1,\ldots$.

6) $y_0, y_1, \ldots$ is closed in the $L_w^2(a,b)$-norm (see 1.27 and 3.9!).

7) $f \in L_w^2(a,b)$.

8) $c_k(f)$ is the Fourier coefficient of f with respect to y_k $(k = 0,1,\ldots)$ (see 1.16 and 3.9!) so that $f \sim \sum_{k=0}^{+\infty} c_k(f)\, y_k$.

Then the following holds:

I. $$\int_{x_0}^{x} f(t)dt = \sum_{k=0}^{+\infty} c_k(f) \int_{x_0}^{x} y_k(t)dt \quad \text{for all } x_0, x \in [A,B] .$$

II. The series in I. converges absolutely and uniformly for all $x_0, x \in [A,B]$.

Proof. All integrals in I. converge by 1), 2), 4), 6), 7) and 1.

The assumptions together with 2. ensure the absolute and uniform convergence of the series in I. for all $x, x_0 \in [A,B]$.

Finally, without loss of generality, we may suppose that $A \leq x_0 \leq x \leq B$. Then by 2), 5), 7), 4) and the Hölder inequality,

$$
(1)\quad \left\{
\begin{aligned}
&\left| \int_{x_0}^{x} f(t)dt - \sum_{k=0}^{n} c_k(f) \int_{x_0}^{x} y_k(t)dt \right| = \left| \int_{x_0}^{x} \left[f(t) - \sum_{k=0}^{n} c_k(f) y_k(t) \right] dt \right| \leq \\
&\leq \int_{x_0}^{x} \left| f(t) - \sum_{k=0}^{n} c_k(f) y_k(t) \right| dt \overset{2)}{=} \int_{x_0}^{x} \left| f(t) - \sum_{k=0}^{n} c_k(f) y_k(t) \right| w^{\frac{1}{2}}(t) \frac{1}{w^{\frac{1}{2}}(t)} \\
&\overset{5),7),4),\text{Hölder}}{\leq} \left[\int_{x_0}^{x} \left| f(t) - \sum_{k=0}^{n} c_k(f) y_k(t) \right|^2 w(t)dt \right]^{\frac{1}{2}} \left[\int_{x_0}^{x} \frac{dt}{w(t)} \right]^{\frac{1}{2}} \overset{2)}{\leq} \\
&\leq \left[\int_{a}^{b} \left| f(t) - \sum_{k=0}^{n} c_k(f) y_k(t) \right|^2 w(t)dt \right]^{\frac{1}{2}} \left[\int_{A}^{B} \frac{dt}{w(t)} \right]^{\frac{1}{2}} = \\
&= \left\| f - \sum_{k=0}^{n} c_k(f) y_k \right\|_{L_w^2(a,b)} \left[\int_{A}^{B} \frac{dt}{w(t)} \right]^{\frac{1}{2}}
\end{aligned}
\right.
$$

for all $n = 0,1,\ldots,$ $A \leq x_0 \leq x \leq B$.

By 6), 7), 8) and 2.4,

$$\lim_{n \to +\infty} \left\| f - \sum_{k=0}^{n} c_k(f) y_k \right\|_{L_w^2(a,b)} = 0.$$

Consequently, by 4), given any $\varepsilon \in (0,+\infty)$ there exists n_0 independent on x_0, x such that

$$(2) \qquad \left\| f - \sum_{k=0}^{n} c_k(f) y_k \right\|_{L_w^2(a,b)} < \frac{\varepsilon}{\left[\int_A^B \frac{dt}{w(t)} \right]^{\frac{1}{2}} + 1} \quad \text{for all} \quad n > n_0.$$

Setting (2) into (1) we obtain

$$\left| \int_{x_0}^{x} f(t)dt - \sum_{k=0}^{n} c_k(f) \int_{x_0}^{x} y_k(t)dt \right| < \varepsilon \quad \text{for all} \quad n > n_0,$$

$$A \leq x_0 \leq x \leq B,$$

which completes the proof.

<u>4. Remark</u>. The result in 2. is a generalization of theorem [2.6.9] in Kaczmarz, Steinhaus, (11) where it is assumed that $w(t) = 1$ for all $t \in [a,b]$. The result in 3. in new, and will be very useful in the sequel.

§ 16. The term-by-term integration of the Fourier expansion in terms of the orthogonal polynomials in $L_w^2(a,b)$.

1. Theorem. Suppose:

1) $-\infty < a \leq A < B \leq b < +\infty$.

2) $0 < w(t) < +\infty$ for a.a. $t \in (a,b)$.

3) $\int_a^b w(t)dt < +\infty$.

(Thus, by 3.1, w is a weight function on (a,b) and, by 1), $\int_a^b t^k w(t)dt$ is finite for all $k = 0,1,\ldots$.)

4) $\int_A^B \frac{dt}{w(t)} < +\infty$.

5) y_k is a polynomial of degree k with real coefficients $(k = 0,1,\ldots)$.

6) $y_0, y_1, \ldots$ is an orthogonal system on (a,b) with respect to w.

(By 5.2, such polynomials $y_0, y_1, \ldots$ exist, and each of them is uniquely determined up to an arbitrary non-zero real factor.)

7) $f \in L_w^2(a,b)$.

8) $c_k(f)$ is the Fourier coefficient of f with respect to y_k $(k = 0,1,\ldots)$ (see 1.16 and 3.9 !) so that $f \sim \sum_{k=0}^{+\infty} c_k(f)\, y_k$.

Then the following holds:

I. $$\int_{x_0}^{x} f(t)dt = \sum_{k=0}^{+\infty} c_k(f) \int_{x_0}^{x} f(t)\, dt \quad \text{for all } x_0, x \in [A,B].$$

II. The series in I. converges absolutely and uniformly for all $x_0, x \in [A,B]$.

Proof. By 14.1, the system $y_0, y_1, \ldots$ is closed in the $L_w^2(a,b)$-norm, and everything then follows from 15.3.

2. Theorem. Suppose:

1) $-\infty \leq a \leq A < B \leq b \leq +\infty$.

2) w is a classical weight function on (a,b) (see 6.1!).

3) $\int_A^B \frac{dt}{w(t)} < +\infty$.

4) y_k is a polynomial of degree k with real coefficients $(k = 0,1,\ldots)$.

5) $y_0, y_1, \ldots$ is an orthogonal system on (a,b) with respect to w.

6) $f \in L_w^2(a,b)$.

7) $C_k(f)$ is the Fourier coefficient of f with respect to y_k $(k = 0,1,\ldots)$ (see 1.16 and 3.12!) so that $f \sim \sum_{k=0}^{+\infty} c_k(f)\, y_k$.

Then the following holds:

I. $$\int_{x_0}^{x} f(t)dt = \sum_{k=0}^{+\infty} c_k(t) \int_{x_0}^{x} \ell_k^{(\alpha)}(t)dt$$ for all

$x_0, x \in [A,B]$, and the series on the right-hand side converges absolutely and uniformly for all $x_0, x \in [A,B]$.

II. If $\alpha \in (-1,1)$ then $$\int_{x_0}^{x} f(t)dt = \sum_{k=0}^{+\infty} c_k(f) \int_{x_0}^{x} \ell_k^{(\alpha)}(t)dt$$

for all $x_0, x \in [0,B]$, and the series on the right-hand side converges absolutely and uniformly for all $x_0, x \in [0,B]$.

Proof. By 2), 3) and 6.3, w is a classical weight function, and

$$\int_A^B \frac{dt}{w(t)} \overset{3)}{=} \int_A^B t^{-\alpha} e^{t} dt \overset{1)}{<} +\infty,$$

so that 15.3 implies I. If $\alpha \in (-1,1)$ then

$$\int_0^B \frac{dt}{w(t)} \overset{3)}{=} \int_0^B t^{-\alpha} e^{t} dt \overset{\alpha \in (-1,1)}{<} +\infty$$

so that 15.3 implies II.

5. Theorem. Suppose:

1) $-\infty < A < B < +\infty$.

2) $w(t) = e^{-t^2}$ for all $t \in (-\infty, +\infty)$.

Then the following holds:

I. $$\int_{x_0}^{x} f(t)\,dt = \sum_{k=0}^{+\infty} c_k(f) \int_{x_0}^{x} y_k(t)dt \quad \text{for all} \quad x_0, x \in [A,B].$$

II. The series in I. converges absolutely and uniformly for all $x_0, x \in [A,B]$.

Proof. By 14.7, the system $y_0, y_1, \ldots$ is closed in the $L_w^2(a,b)$-norm, and everything then follows from 15.3.

3. Theorem. Suppose:

1) $-1 < A < B < +1$.

2) $\alpha, \beta \in (-1, +\infty)$.

3) $w(t) = (1-t)^{\alpha}\,(1+t)^{\beta}$ for all $t \in (-1,1)$.

4) $p_k^{(\alpha,\beta)}$ is a Jacobi polynomial of degree k with indices α, β $(k = 0,1,\ldots)$ (see 5.3!).

5) $f \in L_w^2(-1,1)$.

6) $c_k(f)$ is the Fourier coefficient of f with respect to $p_k^{(\alpha,\beta)}$ $(k = 0,1,\ldots)$ (see 1.16 and 3.9!) so that $f \sim \sum_{k=0}^{+\infty} c_k(f)\, p_k^{(\alpha,\beta)}$.

Then the following holds:

I. $$\int_{x_0}^{x} f(t)\,dt = \sum_{k=0}^{+\infty} c_k(f) \int_{x_0}^{x} p_k^{(\alpha,\beta)}(t)dt \quad \text{for all}$$

$x_0, x \in [A,B]$, and the series on the right-hand side converges absolutely and uniformly for all $x_0, x \in [A,B]$.

II. <u>If</u> $\alpha,\beta \in (-1,1)$ <u>then</u> $\int_{x_0}^{x} f(t)dt = \sum_{k=0}^{+\infty} c_k(f) \int_{x_0}^{x} p_k^{(\alpha,\beta)}(t)dt$

<u>for all</u> $x_0, x \in [-1,1]$, <u>and the series on the right-hand side converges absolutely and uniformly for all</u> $x_0, x \in [-1,1]$.

<u>Proof.</u> By 2), 3) and 6.3, w is a classical weight function, and

$$\int_A^B \frac{dt}{w(t)} \overset{3)}{=} \int_A^B \frac{dt}{(1-t)^\alpha (1+t)^\beta} \overset{1)}{<} +\infty,$$

so that 15.3 implies I. If $\alpha,\beta \in (-1,1)$ then

$$\int_{-1}^{1} \frac{dt}{w(t)} \overset{3)}{=} \int_{-1}^{1} \frac{dt}{(1-t)^\alpha (1+t)^\beta} \overset{\alpha,\beta \in (-1,1)}{<} +\infty,$$

so that 15.3 implies II.

<u>4. Theorem.</u> <u>Suppose:</u>

1) $0 < A < B < +\infty$.

2) $\alpha \in (-1,+\infty)$.

3) $w(t) = t^\alpha e^{-t}$ <u>for all</u> $t \in (0,+\infty)$.

4) $\ell_k^{(\alpha)}$ <u>is a Laguerre polynomial of degree</u> k <u>with index</u> α $(k = 0,1,\ldots)$ (see 5.3!).

5) $f \in L_w^2(0,+\infty)$.

6) $c_k(f)$ <u>is the Fourier coefficient of</u> f <u>with respect to</u> $\ell_k^{(\alpha)}$ $(k = 0,1,\ldots)$ (see 1.16 and 3.9!) <u>so that</u> $f \sim \sum_{k=0}^{+\infty} c_k(f)\ell_k^{(\alpha)}$.

Then the following holds:

I. $$\int_{x_0}^{x} f(t)dt = \sum_{k=0}^{+\infty} c_k(f) \int_{x_0}^{x} \ell_k^{(\alpha)}(t)\, dt \quad \text{for all} \quad x_0,\ x \in [A,B],$$

and the series on the right-hand side converges absolutely and uniformly for all $x_0,\ x \in [A,B]$.

II. If $\alpha \in (-1,1)$ then $$\int_{x_0}^{x} f(t)dt = \sum_{k=0}^{+\infty} c_k(f) \int_{x_0}^{x} \ell_k^{(\alpha)}(t)dt$$

for all $x_0,\ x \in [0,B]$, and the series on the right-hand side converges absolutely and uniformly for all $x_0,\ x \in [0,B]$.

Proof. By 2), 3) and 6.3, ω is a classical weight function, and

$$\int_A^B \frac{dt}{w(t)} \overset{3)}{=} \int_A^B t^{-\alpha} e^t\, dt \overset{1)}{<} +\infty ,$$

so that 15.3 implies I. If $\alpha \in (-1,1)$ then

$$\int_0^B \frac{dt}{w(t)} \overset{3)}{=} \int_0^B t^{-\alpha} e^t\, dt \overset{\alpha \in (-1,1)}{<} +\infty$$

so that 15.3 implies II.

5. Theorem. Suppose:

1) $-\infty < A < B < +\infty$.

2) $w(t) = e^{-t^2}$ for all $t \in (-\infty,+\infty)$.

3) h_k <u>is a Hermite polynomial of degree</u> k $(k = 0,1,\ldots)$ (see 5.3!).

4) $f \in L^2_w(-\infty,+\infty)$.

5) $c_k(f)$ <u>is the Fourier coefficient of</u> f <u>with respect to</u> h_k $(k = 0,1,\ldots)$ (see 1.16 and 3.9!) <u>so that</u> $f \sim \sum_{k=0}^{+\infty} c_k(f)\, h_k$.

<u>Then</u> $$\int_{x_0}^{x} f(t)\,dt = \sum_{k=0}^{+\infty} c_k(f) \int_{x_0}^{x} h_k(t)dt$$ <u>for all</u> $x_0, x \in [A,B]$,

<u>and the series on the right-hand side converges absolutely and uniformly for all</u> $x_0, x \in [A,B]$.

<u>Proof</u>. By 2) and 6.3, w is a classical weight function, and

$$\int_A^B \frac{dt}{w(t)} \overset{2)}{=} \int_A^B e^{t^2}\,dt \overset{1)}{<} +\infty,$$

so that 15.3 implies the result.

<u>6. Counterexamples</u>. Fix any $\alpha,\beta \in (1,+\infty)$, and set

$f(t) = \dfrac{1}{(1-t)(1+t)}$ for all $t \in (-1,1)$. Then $f \in L^2_{(1-t)^\alpha(1+t)^\beta}(-1,1)$

but $f \notin L(-1,1)$. This counterexample and other similar ones of this kind show that II. in 3. <u>need not be true if</u> $\alpha \in (1,+\infty)$ <u>or</u> $\beta \in (1,+\infty)$.

Next fix any $\alpha \in (1,+\infty)$, and set $f(t) = \frac{1}{t}$ for all $t \in (0,+\infty)$. Then $f \in L^2_{t^\alpha e^{-t}}(0,+\infty)$ but $f \notin L(0,B)$ for any $B \in (0,+\infty)$. This counterexample shows that II. in 4. <u>need only be true if</u> $\alpha \in (1,+\infty)$.

7. Remark. All the results in this section are new.

§ 17. The extension theorem

1. Lemma. Suppose:

1) T, $\operatorname{Re} z \in (0,+\infty)$.

2) $f \in L(0,T)$ with period T.

Then
$$\int_0^{+\infty} f(t)\, e^{-zt} dt = \sum_{k=0}^{+\infty} (e^{-zT})^k \int_0^T f(t)\, e^{-zt} dt.$$

Proof. Let $x = \operatorname{Re} z$, $y = \operatorname{In} z$, so that, by 1), $x \in (0,+\infty)$. Then

$$(1)\quad \begin{cases} \displaystyle\int_0^{+\infty} |f(t)e^{-zt}|dt = \int_0^{+\infty} |f(t)|e^{-xt}dt = \sum_{k=0}^{+\infty} \int_{kT}^{(k+1)T} |f(t)|e^{-xt}dt = \left| \begin{array}{l} t = u+kT \\ dt = du \\ \begin{array}{c|c} t & u \\ \hline kt & 0 \\ (k+1)T & T \end{array} \end{array} \right| = \\ \displaystyle = \sum_{k=0}^{+\infty} \int_0^T \underbrace{|f(u+kT)|}_{=|f(u)| \text{ by 2)}} e^{-x(u+kT)} du = \sum_{k=0}^{+\infty} \underbrace{(e^{-xT})^k}_{<1 \text{ by 1)}} \underbrace{\int_0^T |f(u)|e^{-xu} du}_{\text{independent on } k} \leq \\ \displaystyle \leq \frac{1}{1-e^{-xT}} \int_0^T |f(u)|du \overset{2)}{<} +\infty \end{cases}$$

so that $\displaystyle\int_0^{+\infty} f(t)e^{-zt}dt$ exists. Consequently, by repeating the consideration

in (1) without the absolute values and with z instead of x, we obtain

$$\int_0^{+\infty} f(t)e^{-zt}dt = \sum_{k=0}^{+\infty} (e^{-zT})^k \int_0^T f(t)e^{-zt}dt.$$

2. The extension theorem. Suppose :

1) T, $\operatorname{Re} z \in (0,+\infty)$, c_k are complex numbers for $k = 0,1,\ldots$.

2) $f, y_k \in L(0,T)$ with period T $(k = 0,1,\ldots)$.

3) $$\int_0^T f(t)e^{-zt}dt = \sum_{k=0}^{+\infty} c_k \int_0^T y_k(t)e^{-zt}dt.$$

Then $$\int_0^{+\infty} f(t)e^{-zt}dt = \sum_{k=0}^{+\infty} c_k \int_0^{+\infty} y_k(t)e^{-zt}dt.$$

Proof. By 1),2) and 1.,

(1) $$\int_0^{+\infty} f(t)e^{-zt}dt = \sum_{j=0}^{+\infty} (e^{-zT})^j \underbrace{\int_0^T f(t)e^{-zt}dt}_{\text{independent of } j},$$

(2) $$\int_0^{+\infty} y_k(t)e^{-zt}dt = \sum_{j=0}^{+\infty} (e^{-zT})^j \underbrace{\int_0^T y_k(t)e^{-zt}dt}_{\text{independent of } j} \quad \text{for} \quad k = 0,1,\ldots .$$

Consequently multiplying both sides of 3) by $\sum_{j=0}^{+\infty} (e^{-zT})^j$ and using the formulae (1) and (2) we obtain the above formula.

3. Remark The extension theorem in 2. will simplify many proofs in the sequel. It was kindly brought to my attention by Professor T. Rooney of the University of Toronto in an oral communication after reading my paper Novotný (29), where a more complicated method was used.

§18. The term-by-term Laplace transformation of a Fourier expansion in $L_w^2(a,b)$

1. Theorem. Suppose:

1) $-\infty < a < b < +\infty, \quad \delta \in (0,+\infty)$.

2) $0 < w(t) < +\infty$ for a.a. $t \in (a,b)$.

3) w is measurable on (a,b).

4) $\int_a^b \frac{dt}{w(t)} < +\infty$.

5) y_k is real, measurable with $0 < \| y_k \|_{L_w^2(a,b)} < +\infty$ and period $b-a$ $(k = 0,1,\ldots)$.

6) $y_0, y_1, \ldots$ is an orthogonal system on (a,b) with respect to w.

7) $f \in L_w^2(a,b)$.

8) $c_k(f)$ is the Fourier coefficient of f with respect to y_k $(k = 0,1,\ldots)$ (see 1.16 and 3.9!) so that $f \sim \sum_{k=0}^{+\infty} c_k(f)\, y_k$.

Then the series $\sum_{k=0}^{+\infty} c_k(f) \int_0^{+\infty} y_k(t+a)e^{-zt}\, dt$ converges absolutely and uniformly for all z with $\operatorname{Re} z \in [\delta, +\infty)$.

Proof. By 5) and 15.1,

(1) $$\underbrace{y_k(t+a)}_{\text{function of } t} \in L(0,b-a) \quad (k = 0,1,\ldots).$$

Let $x = \operatorname{Re} z \in [\delta,+\infty) \overset{1)}{\subset} (0,+\infty)$. Then, by (1), 5) and 17.2,

(2) $$\int_0^{+\infty} y_k(t+a)\, e^{-zt}\, dt = \sum_{k=0}^{+\infty} \left[e^{-(b-a)z} \right]^k \int_0^{b-a} y_k(t+a) e^{-zt} dt \quad (k = 0,1,\ldots)$$

Consider the function

(3) $$g_z(t) = \frac{e^{-zt}}{w(t)} \quad \text{for all} \quad t \in (a,b).$$

By 4),

(4) $$\| g_z \|^2_{L^2_w(a,b)} = \int_a^b \left| \frac{e^{-zt}}{w(t)} \right|^2 w(t)dt = \int_a^b \frac{e^{-2xt}}{w(t)}\, dt \overset{x \in (0,+\infty)}{\leq}$$

$$\overset{x \in (0,+\infty)}{\leq} e^{-2ax} \int_a^b \frac{dt}{w(t)} \overset{4)}{<} +\infty$$

so that, by 1.16 and 3.9, we may introduce the Fourier coefficient $c_k(g_z)$ of g_z with respect to y_k by the formula

(5) $$\begin{cases} c_k(g_z) = \dfrac{1}{\| y_k \|^2_{L^2_w(a,b)}} \displaystyle\int_a^b g_z(t)\, \underbrace{\overline{y_k(t)}}_{\text{real by 5)}}\, w(t)dt \overset{(3)}{=} \\[2ex] \overset{(3)}{=} \dfrac{1}{\| y_k \|^2_{L^2_w(a,b)}} \displaystyle\int_a^b y_k(t)\, e^{-zt} dt \quad (k = 0,1,\ldots). \end{cases}$$

By (2)-(5) and the Holder inequality for sums

$$
(6)\left\{
\begin{aligned}
&\left|\sum_{k=p}^{q} c_k(f)\int_0^{+\infty} y_k(t+a)e^{-zt}dt\right| \le \sum_{k=p}^{q}|c_k(f)|\left|\int_0^{+\infty} y_k(t+a)e^{-zt}dt\right| \overset{(2)}{=}\\
&\overset{(2)}{=}\sum_{k=p}^{q}|c_k(f)|\left|\underbrace{\sum_{j=0}^{+\infty}\left[e^{-(b-a)z}\right]^j}_{\text{independent of } k}\ \underbrace{\int_0^{b-a} y_k(t+a)e^{-zt}dt}_{\text{independent of } j}\right| \le\\
&\le \sum_{j=0}^{+\infty}\left[e^{-(b-a)x}\right]^j \sum_{k=p}^{q}|c_k(f)|\left|\int_0^{b-a} y_k(t+a)e^{-zt}dt\right| = \left|\begin{array}{l} t+a=u\\ t=u-a\\ dt=du\end{array}\quad \begin{array}{c|c} t & u\\ \hline 0 & a\\ b-a & b\end{array}\right| =\\
&= \frac{1}{1-e^{-(b-a)x}}\sum_{k=p}^{q}|c_k(f)|\left|\int_a^b y_k(u)e^{-z(u-a)}du\right| =\\
&= \frac{e^{ax}}{1-e^{-(b-a)x}}\sum_{k=p}^{q}|c_k(f)|\,\|y_k\|_{L_w^2(a,b)}\left|\frac{1}{\|y_k\|_{L_w^2(a,b)}}\int_a^b y_k(u)e^{-zu}du\right|\|y_k\|_{L_w^2(a,b)} \overset{(5)}{=}\\
&= \frac{e^{bx}}{e^{(b-a)x}-1}\sum_{k=p}^{q}|c_k(f)|\,\|y_k\|_{L_w^2(a,b)}\,|c_k(g_z)|\,\|y_k\|_{L_w^2(a,b)} \overset{\text{Hölder for sums}}{\le}\\
&\le \frac{e^{bx}}{e^{(b-a)x}-1}\left[\sum_{k=p}^{q}|c_k(f)|^2\|y_k\|^2_{L_w^2(a,b)}\right]^{\frac{1}{2}}\left[\sum_{k=p}^{q}|c_k(g_z)|^2\|y_k\|^2_{L_w^2(a,b)}\right]^{\frac{1}{2}}\\
&\qquad \text{for all } 0\le p\le q,\quad x=\operatorname{Re} z\in[\delta,+\infty).
\end{aligned}
\right.
$$

By 6), (4), 7), the Bessel theorem 1.22 and 4),

$$
(7)\qquad \sum_{k=0}^{+\infty}|c_k(f)|^2\|y_k\|^2_{L_w^2(a,b)} \overset{6),7),1.22}{\le} \|f\|^2_{L_w^2(a,b)} \overset{7)}{<} +\infty,
$$

$$(8)\quad \begin{cases} \displaystyle\sum_{k=p}^{q} |c_k(g_z)|^2 \|y_k\|^2_{L^2_w(a,b)} \le \sum_{k=0}^{+\infty} |c_k(g_z)|^2 \|y_k\|^2_{L^2_w(a,b)} \overset{6),(4),1.22}{\le} \\ \displaystyle \overset{6),(4),1.22}{\le} \|g_z\|^2_{L^2_w(a,b)} \overset{(4)}{\le} e^{-2ax} \int_a^b \frac{dt}{w(t)} \overset{4)}{<} +\infty \\ \text{for all } 0 \le p \le q, \quad x = \operatorname{Re} z \in [\delta, +\infty). \end{cases}$$

Setting (8) into (6) we obtain

$$(9)\quad \begin{cases} \displaystyle\left| \sum_{k=p}^{q} c_k(f) \int_0^{+\infty} y_k(t+a)e^{-zt}dt \right| \le \sum_{k=p}^{q} |c_k(f)| \left| \int_0^{+\infty} y_k(t+n)e^{-zt}dt \right| \le \\ \displaystyle \le \underbrace{\frac{e^{(b-a)x}}{e^{(b-a)x}-1}}_{\substack{\text{decreasing f.} \\ \text{of } x \text{ in } [\delta,+\infty)}} \left[\sum_{k=p}^{q} |c_k(f)|^2 \|y_k\|^2_{L^2_w(a,b)} \right]^{\frac{1}{2}} \left[\int_a^b \frac{dt}{w(t)} \right]^{\frac{1}{2}} \\ \displaystyle \le \frac{e^{(b-a)\delta}}{e^{(b-a)\delta}-1} \left[\sum_{k=p}^{q} |c_k(f)|^2 \|y_k\|^2_{L^2_w(a,b)} \right]^{\frac{1}{2}} \left[\int_a^b \frac{dt}{w(t)} \right]^{\frac{1}{2}} \\ \text{for all } 0 \le p \le q, \quad x = \operatorname{Re} z \in [\delta, +\infty). \end{cases}$$

By (7) and the Bolzano-Cauchy theorem, given any $\varepsilon \in (0,+\infty)$ there exists n_0 independent on z such that

$$(10)\quad \begin{cases} \displaystyle\sum_{k=p}^{q} |c_k(f)|^2 \|y_k\|^2_{L^2_w(a,b)} < \frac{\varepsilon^2}{\left[\frac{e^{(b-a)\delta}}{e^{(b-a)\delta}-1}\right]^2 \left[\int_a^b \frac{dt}{w(t)} + 1\right]} \\ \text{for all } n_0 \le p \le q. \end{cases}$$

Setting (10) into (9) we obtain

$$\left| \sum_{k=p}^{q} |c_k(f) \int_0^{+\infty} y_k(t+a)e^{-zt}dt \right| \leq \sum_{k=p}^{q} |c_k(f)| \left| \int_0^{+\infty} y_k(t+a)e^{-zt}dt \right| < \varepsilon$$

$$\text{for all } n_0 \leq p \leq q, \qquad x = \operatorname{Re} z \in [\delta, +\infty).$$

Hence, by the Bolzano-Cauchy theorem again, the result follows.

2. Theorem. Suppose:

1) $-\infty < a < b < +\infty, \quad \delta \in (0,+\infty).$

2) $0 < w(t) < +\infty$ for a.a. $t \in (0,+\infty)$.

3) w is measurable on (a,b).

4) $\displaystyle\int_a^b \frac{dt}{w(t)} < +\infty.$

5) y_k is real measurable with $0 < \| y_k \|_{L_w^2(a,b)} < +\infty$ and period $b-a$ $(k = 0,1,\ldots)$.

6) $y_0, y_1, \ldots$ is an orthogonal system on (a,b) with respect to w.

7) $y_0, y_1, \ldots$ is closed in the $L_w^2(a,b)$-norm (see 1.27 and 3.9!)

8) $f \in L_w^2(a,b)$ with period $b-a$.

9) $c_k(f)$ is the Fourier coefficient of f with respect to y_k $(k = 0,1,\ldots)$ (see 1.16 and 3.9!) so that $f \sim \sum_{k=0}^{+\infty} c_k(f)\, y_k$.

Then the following holds:

I. $$\int_0^{+\infty} f(t+a)e^{-zt}dt = \sum_{k=0}^{+\infty} c_k(f) \int_0^{+\infty} y_k(t+a)e^{-zt}dt \quad \underline{\text{for}} \quad \operatorname{Re} z \in (0,+\infty)$$

II. <u>The series on the right-hand side of</u> I. <u>converges absolutely and uniformly for all</u> z <u>with</u> $\operatorname{Re} z \in [\delta,+\infty)$.

<u>Proof</u>. I. By 5), 8) and 15.1,

(1) $$\underbrace{f(t+a),\ y_k(t+a)}_{\text{function of } t} \in L(0,b-a) \quad (k = 0,1,\ldots).$$

Fix any $n = 0,1,\ldots,$ and any z with $x = \operatorname{Re} z \in (0,+\infty)$. Then, by the Hölder inequalit

(2)
$$\left|\int_0^{b-a} f(t+a)e^{-zt}dt - \sum_{k=0}^{n} c_k(f) \int_0^{b-a} y_k(t+a)e^{-zt}dt\right| = \left|\begin{array}{l} t+a = u \\ t = u-a \\ dt = du \end{array} \quad \begin{array}{c|c} t & u \\ \hline 0 & a \\ b-a & b \end{array}\right| =$$

$$= \left|\int_a^b f(u)-e^{-z(u-a)}du - \sum_{k=0}^{n} c_k(f) \int_a^b y_k(u)e^{-z(u-a)}du\right| =$$

$$= e^{ax}\left|\int_a^b \left[f(u) - \sum_{k=0}^{n} c_k(f)\, y_k(u)\right] e^{-zu}du\right| \leq$$

$$\leq e^{ax} \int_a^b \left|f(u) - \sum_{k=0}^{n} c_k(f)\, y_k(u)\right| w^{\frac{1}{2}}(u)\, \frac{e^{-xu}}{w^{\frac{1}{2}}(u)}\, du \overset{\text{Hölder}}{\leq}$$

$$\overset{\text{Hölder}}{\leq} e^{ax}\left[\int_a^b \left|f(u) - \sum_{k=0}^{n} c_k(f)y_k(u)\right|^2 w(u)du\right]^{\frac{1}{2}} \left[\int_a^b \frac{e^{-2xu}}{w(u)}\, du\right]^{\frac{1}{2}} \overset{x \in (0,+\infty)}{\leq}$$

$$\overset{x \in (0,+\infty)}{\leq} e^{ax}\left[\int_a^b \left|f(u) - \sum_{k=0}^{n} c_k(f)y_k(u)\right|^2 w(u)du\right]^{\frac{1}{2}} \left[e^{-2ax} \int_a^b \frac{du}{w(u)}\right]^{\frac{1}{2}} =$$

$$= \left\|f - \sum_{k=0}^{n} c_k(f)y_k\right\|_{L_w^2(a,b)} \underbrace{\left[\int_a^b \frac{du}{w(u)}\right]^{\frac{1}{2}}}_{+\infty \text{ by } 4)}$$

By 5) - 9) and 2.4,

$$\lim_{n\to+\infty} \left\| f - \sum_{k=0}^{n} c_k(f) y_k \right\|_{L_w^2(a,b)} = 0.$$

Consequently, given any $\varepsilon \in (0,+\infty)$ there exists n_0 such that

$$(3) \qquad \left\| f - \sum_{k=0}^{n} c_k(f)\, y_k \right\|_{L_w^2(a,b)} < \frac{\varepsilon}{\left[\int_a^b \frac{dt}{w(t)} + 1\right]^{\frac{1}{2}}} \quad \text{for all } n > n_0.$$

Setting (3) into (2) we obtain

$$\left| \int_0^{b-a} f(t+a)e^{-zt}dt - \sum_{k=0}^{n} c_k(f) \int_0^{b+a} y_n(t+a)e^{-zt}dt \right| < \varepsilon \quad \text{for all } n > n_0$$

so that

$$(4) \qquad \int_0^{b-a} f(t+a)e^{-zt}dt = \sum_{k=0}^{+\infty} c_k(f) \int_0^{b-a} y_k(t+a)e^{-zt}dt.$$

But the (b-a)-periodicity of $f, y_0, y_1, \ldots$, (1) and (4) imply in view of the extension theorem 17.2 the formula in I.

II. Follows immediately from 1.

<u>3. Lemma</u>. <u>Suppose</u>:

1) z <u>is a complex number</u>.

2) $0 < w(t) < +\infty$ <u>for a.a.</u> $t \in (0,+\infty)$.

3) w <u>is measurable on</u> $(0,+\infty)$.

4) $\displaystyle\int_0^{+\infty} \frac{1}{w(\frac{1}{2}t)} e^{-zt}dt$ <u>is finite</u>.

5) $f \in L^2_w(0,+\infty)$.

<u>Then</u> $\int_0^{+\infty} f(t)e^{-zt}dt$ <u>is finite</u>.

<u>Proof</u>. Let $x = \operatorname{Re} z$. Then $\int_0^{+\infty} |f(t)e^{-zt}|dt = \int_0^{+\infty} |f(t)|e^{-xt}dt \overset{2)}{=}$

$$\overset{2)}{=} \int_0^{+\infty} |f(t)| w^{\frac{1}{2}}(t) \frac{1}{w^{\frac{1}{2}}(t)} dt \overset{\text{Hölder}}{\leq} \left[\int_0^{+\infty} |f(t)|^2 w(t)dt\right]^{\frac{1}{2}} \left[\int_0^{+\infty} \frac{1}{w(t)} e^{-2xt}dt\right]^{\frac{1}{2}} =$$

$$= \frac{1}{\sqrt{2}} \left[\int_0^{+\infty} |f(t)|^2 w(t)dt\right]^{\frac{1}{2}} \left[\int_0^{+\infty} \frac{1}{w(\frac{1}{2}u)} e^{-xu}du\right]^{\frac{1}{2}} =$$

$$= \frac{1}{\sqrt{2}} \left[\int_0^{+\infty} |f(t)|^2 w(t)dt\right]^{\frac{1}{2}} \left[\int_0^{+\infty} \left|\frac{1}{w(\frac{1}{2}u)} e^{-zu}\right|du\right]^{\frac{1}{2}} \overset{4),5)}{<} +\infty.$$

<u>4. Theorem</u>. <u>Suppose</u>:

1) $\delta \in (0,+\infty)$, $c \in (-\infty,+\infty)$.

2) $0 < w(t) < +\infty$ <u>for a.a.</u> $t \in (0,+\infty)$.

3) w <u>is measurable on</u> $(0,+\infty)$.

4) $\int_0^{+\infty} \frac{1}{w(\frac{1}{2}t)} e^{-zt}dt$ <u>is finite for all</u> z <u>with</u> $\operatorname{Re} z \in (c,+\infty)$

5) y_k <u>is real measurable with</u> $0 < \|y_k\|_{L^2_w(0,+\infty)} < +\infty$

<u>for</u> $k = 0,1,\ldots$

6) $y_0, y_1, \ldots$ <u>is an orthogonal system on</u> $(0,+\infty)$ <u>with respect to</u> w.

7) $f \in L^2_w(0,+\infty)$.

8) $c_k(f)$ <u>is the Fourier coefficient of</u> f <u>with respect to</u> y_k $(k = 0,1,\ldots)$ (see 1.16 and 3.9!) <u>so that</u> $f \sim \sum_{k=0}^{+\infty} c_k(f)\, y_k$.

<u>Then the series</u> $\sum_{k=0}^{+\infty} c_k(f) \int_0^{+\infty} y_k(t)\, e^{-zt} dt$ <u>converges absolutely and uniformly for all</u> z <u>with</u> $\operatorname{Re} z \in [c+\delta, +\infty)$.

<u>Proof</u>. Let $x = \operatorname{Re} z \in [c+\delta, +\infty)$. Then, by 2), 4) and 3.,

(1) $$\int_0^{+\infty} y_k(t)\, e^{-zt}\, dt \quad \text{is finite for all} \quad k = 0,1,\ldots$$

Consider the function

(2) $$g_z(t) = \frac{e^{-zt}}{w(t)} \qquad \text{for all} \quad t \in (0,+\infty).$$

By 4),

(3) $$\left\{ \begin{aligned} \|g_z\|^2_{L^2_w(0,+\infty)} &= \int_0^{+\infty} \left| \frac{e^{-zt}}{w(t)} \right|^2 w(t)dt = \int_0^{+\infty} \frac{e^{-2xt}}{w(t)}\, dt = \left| \begin{array}{l} 2t = u \\ t = \frac{1}{2} u \\ dt = \frac{1}{2} du \end{array} \quad \begin{array}{c|c} t & u \\ \hline 0 & 0 \\ +\infty & +\infty \end{array} \right. \\ &= \frac{1}{2} \int_0^{+\infty} \frac{1}{w(\frac{1}{2}u)}\, e^{-xu}\, du \leq \frac{1}{2} \int_0^{+\infty} \frac{1}{w(\frac{1}{2}u)}\, e^{-(c+\delta)u} du \overset{4)}{<} +\infty \end{aligned} \right.$$

so that, by 1.16 and 3.9, we may introduce the Fourier coefficient $c_k(g_z)$ of g_z with respect to y_k by the formula

$$(4)\quad \begin{cases} c_k(g_z) = \dfrac{1}{\|y_k\|^2_{L^2_w(0,+\infty)}} \displaystyle\int_0^{+\infty} g_z(t)\, \underbrace{\overline{y_k(t)}}_{\text{real by 5)}}\, w(t)\, dt \overset{(2)}{=} \\[2ex] \overset{(2)}{=} \dfrac{1}{\|y_k\|^2_{L^2_w(0,+\infty)}} \displaystyle\int_0^{+\infty} y_k(t)e^{-zt}dt \quad (k = 0,1,\dots). \end{cases}$$

By (1),(4) and the Holder inequality for sums,

$$(5)\quad \begin{cases} \displaystyle\sum_{k=p}^{q} c_k(f) \int_0^{+\infty} y_k(t)e^{-zt}dt \quad \sum_{k=p}^{q} c_k(f) \int_0^{+\infty} y_k(t)e^{-zt}dt = \\[2ex] = \displaystyle\sum_{k=p}^{q} |c_k(f)|\, \|y_k\|_{L^2_w(0,+\infty)} \left| \frac{1}{\|y_k\|^2_{L^2_w(0,+\infty)}} \int_0^{+\infty} y_k(t)e^{-zt}dt\, \|y_k\|_{L^2_w(0,+\infty)} \right| \overset{(4)}{=} \\[2ex] = \displaystyle\sum_{k=p}^{q} |c_k(f)|\, \|y_k\|_{L^2_w(0,+\infty)}\, |c_k(g_z)|\, \|y_k\|_{L^2_w(0,+\infty)} \overset{\text{Hölder for sums}}{\leq} \\[2ex] \leq \left[\displaystyle\sum_{k=p}^{q} |c_k(f)|^2 \|y_k\|^2_{L^2_w(0,+\infty)} \right]^{\frac{1}{2}} \left[\sum_{k=p}^{q} |c_k(gz)|^2\, \|y_k\|^2_{L^2_w(0,+\infty)} \right]^{\frac{1}{2}} \\[2ex] \qquad \text{for all } 0 \leq p \leq q, \quad \operatorname{Re} z \in [c+\delta, +\infty). \end{cases}$$

By 7), (3), 8), the Bessel theorem 1.22 and (3),

$$(6)\qquad \sum_{k=0}^{+\infty} |c_k(f)|^2 \|y_k\|^2_{L^2_w(0,+\infty)} \overset{7),8),1.22}{\leq} \|f\|^2_{L^2_w(0,+\infty)} \overset{7)}{<} +\infty,$$

$$(7)\quad \begin{cases} \displaystyle\sum_{k=p}^{q} |c_k(g_z)|^2 \|y_k\|^2_{L^2_w(0,+\infty)} \leq \sum_{k=0}^{+\infty} |c_k(g_z)|^2 \|y_k\|^2_{L^2_w(0,+\infty)} \overset{(3),8),1.22}{\leq} \\[2ex] \displaystyle\overset{(3),8),1.22}{\leq} \|gz\|^2_{L^2_w(0,+\infty)} \overset{(3)}{\leq} \frac{1}{2}\int_0^{+\infty} \frac{1}{w(\frac{1}{2}u)} e^{-(c+\delta)u} du \overset{4)}{<} +\infty \\[2ex] \text{for all } 0 \leq p \leq q, \ \operatorname{Re} z \in [c+\delta, +\infty). \end{cases}$$

Setting (7) into (5) we obtain

$$(8)\quad \begin{cases} \displaystyle\left| \sum_{k=p}^{q} c_k(f) \int_0^{+\infty} y_k(t) e^{-zt} dt \right| \leq \sum_{k=p}^{q} |c_k(f)| \left| \int_0^{+\infty} y_k(t) e^{-zt} dt \right| \leq \\[2ex] \displaystyle\leq \left[\sum_{k=p}^{q} |c_k(f)|^2 \|y_k\|^2_{L^2_w(0,+\infty)} \right]^{\frac{1}{2}} \left[\frac{1}{2} \int_0^{+\infty} \frac{1}{(\frac{1}{2}u)} e^{-(c+\delta)u} du \right]^{\frac{1}{2}} \\[2ex] \text{for all } 0 \leq p \leq q, \ \operatorname{Re} z \in [c+\delta, +\infty). \end{cases}$$

By (6) and the Bolzano-Cauchy theorem, given any $\varepsilon \in (0,+\infty)$ there exists n_0 independent ~~on~~ of z such that

$$(9)\quad \begin{cases} \displaystyle\sum_{k=p}^{q} |c_k(f)|^2 \|y_k\|^2_{L^2_w(0,+\infty)} < \frac{\varepsilon^2}{\frac{1}{2}\int_0^{+\infty} \frac{1}{w(\frac{1}{2}u)} e^{-(c+\delta)u} du + 1} \\[2ex] \text{for all } n_0 \leq p \leq q. \end{cases}$$

Setting (9) into (8) we obtain

$$\left| \sum_{k=p}^{q} c_k(t) \int_0^{+\infty} y_k(t) e^{-zt} dt \right| \leq \sum_{k=p}^{q} |c_k(t)| \left| \int_0^{+\infty} y_k(t) e^{-zt} dt \right| < \varepsilon$$

for all $n_0 \leq p \leq q$, $\operatorname{Re} z \in [c+\delta, +\infty)$.

Hence, by the Bolzano-Cauchy theorem again, the result follows.

5. Theorem. Suppose:

1) $\delta \in (0, +\infty)$, $c \in (-\infty, +\infty)$.

2) $0 < w(t) < +\infty$ for a.a. $t \in (0, +\infty)$.

3) w is measurable on $(0, +\infty)$

4) $\displaystyle\int_0^{+\infty} \frac{1}{w(\frac{1}{2}t)} e^{-zt} dt$ is finite for all z with $\operatorname{Re} z \in (c, +\infty)$.

5) y_k is real, measurable with $0 < \| y_k \|_{L_w^2(0,+\infty)} < +\infty$ $(k = 0,1,\ldots)$.

6) $y_0, y_1, \ldots$ is an orthogonal system on $(0, +\infty)$ with respect to w.

7) $y_0, y_1, \ldots$ is closed in the $L_w^2(0, +\infty)$-norm (see 1.27 and 3.9!).

8) $f \in L_w^2(0, +\infty)$.

9) $c_k(f)$ is the Fourier coefficient of f with respect to y_k $(k = 0,1,\ldots)$ (see 1.16 and 3.9!) so that $f \sim \sum_{k=0}^{+\infty} c_k(t)\, y_k$.

Then the following holds:

$$\text{I.} \qquad \int_0^{+\infty} f(t)e^{-zt}dt = \sum_{k=0}^{+\infty} c_k(f) \int_0^{+\infty} y_k(t)e^{-zt}dt$$

<u>for all</u> z <u>with</u> $\operatorname{Re} z \in (c,+\infty)$.

II. <u>The series on the right-hand side of</u> I. <u>converges absolutely and uniformly for all</u> z <u>with</u> $\operatorname{Re} z \in [c+\delta,+\infty)$.

<u>Proof</u>. I. By 2), 4), 5), 8) and 3.,

$$\int_0^{+\infty} f(t)e^{-zt}dt, \quad \int_0^{+\infty} y_k(t)e^{-zt}dt \text{ is finite for } k = 0,1,\ldots,$$

$$\operatorname{Re} z \in (c,+\infty).$$

Next fix any $n = 0,1,\ldots,$ and any z with $\operatorname{Re} z \in (c,+\infty)$. Then

$$\left| \int_0^{+\infty} f(t)e^{-zt}dt - \sum_{k=0}^{n} c_k(t) \int_0^{+\infty} y_k(t)e^{-zt}dt \right| =$$

$$= \left| \int_0^{+\infty} \left[f(t) - \sum_{k=0}^{n} c_k(t)\, y_k(t) \right] e^{-zt}dt \right| \overset{2)}{\leq}$$

$$\overset{2)}{\leq} \int_0^{+\infty} \left| f(t) - \sum_{k=0}^{n} c_k(t)\, y_k(t) \right| w^{\frac{1}{2}}(t) \frac{e^{-xt}}{w^{\frac{1}{2}}(t)}\, dt \overset{\text{Hölder}}{\leq}$$

$$\leq \left[\int_0^{+\infty} \left| f(t) - \sum_{k=0}^{n} c_k(f) y_k(t) \right|^2 w(t)dt \right]^{\frac{1}{2}} \left[\int_0^{+\infty} \frac{e^{-2xt}}{w(t)}\, dt \right]^{\frac{1}{2}} = \left| \begin{array}{l} 2t = u \\ t = \frac{1}{2}u \\ dt = \frac{1}{2}du \end{array} \quad \begin{array}{c|c} t & u \\ \hline 0 & 0 \\ +\infty & + \end{array} \right.$$

$$= \left\| f - \sum_{k=0}^{n} c_k(f) \right\|_{L_w^2(0,+\infty)} \underbrace{\left[\frac{1}{2} \int_0^{+\infty} \frac{1}{w(\frac{1}{2}u)} e^{-xu}du \right]^{\frac{1}{2}}}_{\text{finite by 4)}}$$

By 5)- 9) and 2.4,

$$(2) \qquad \lim_{n \to +\infty} \left\| f - \sum_{k=0}^{n} c_k(f) y_k \right\| = 0.$$

From (1), (2) and 4) the formula in I. follows.

II. Follows immediately from 4.

6. Remark. Unfortunately the method applied in the proof of 5. fails to work in the case of an orthogonal system $y_0, y_1, \ldots$ on $(-\infty, +\infty)$ with respect to a weight function w on $(-\infty, +\infty)$.

In such a case we would have to suppose namely that

2) $0 < w(t) < +\infty$ for a.a. $t \in (-\infty, +\infty)$.

3) w is measurable on $(-\infty, +\infty)$.

4) $\displaystyle\int_{-\infty}^{+\infty} \frac{1}{w(\frac{1}{2}t)} e^{-zt} dt$ is finite for all z with $\operatorname{Re} z \in S$,

where in accordance with the theory of the double-sided Laplace transformation, the set S would have to be a non-empty strip perpendicular to the real axis in the z-plane. If S contained any $z \in [0, +\infty)$ then, for this z,

$$(1) \quad \left\{ \begin{aligned} &\int_{-\infty}^{0} \frac{dt}{w(t)} = \frac{1}{2} \int_{-\infty}^{0} \frac{du}{w(\frac{1}{2}u)} \leq \frac{1}{2} \int_{-\infty}^{0} \frac{1}{w(\frac{1}{2}u)} \underbrace{e^{-zu}}_{\geq 1} du \leq \\ &\leq \frac{1}{2} \int_{-\infty}^{+\infty} \frac{1}{w(\frac{1}{2}u)} e^{-zu} du \overset{4)}{<} +\infty \end{aligned} \right.$$

so that

$$+\infty = \int_{-\infty}^{0} dt \overset{2)}{=} \int_{-\infty}^{0} w^{\frac{1}{2}}(t) \frac{1}{w^{\frac{1}{2}}(t)} dt \overset{\text{Hölder}}{\leq} \left[\int_{-\infty}^{0} w(t)dt\right]^{\frac{1}{2}} \left[\int_{-\infty}^{0} \frac{dt}{w(t)}\right]^{\frac{1}{2}} \overset{2),}{\leq}$$

$$\overset{2),(1)}{\leq} \left[\int_{-\infty}^{+\infty} w(t)dt\right]^{\frac{1}{2}} \left[\frac{1}{2} \int_{-\infty}^{+\infty} \frac{1}{w(\frac{1}{2}t)} e^{-zt}dt\right]^{\frac{1}{2}} \overset{3),4)}{<} +\infty,$$

which is a contradiction. A similar contradiction would occur if S contained any $z \in (-\infty,0)$. Consequently the assumptions 2)- 4) would always be contradictory.

<u>7. Remark</u>. All the results in this section are new.

§ 19. The term-by-term Laplace transformation of the usual Fourier expansion of a function $f \in L^2(0,2\pi)$.

1. Theorem. Suppose:

1) $f \in L^2(0,2\pi)$ with period 2π.

2) $f(t) \sim a_0 + \sum_{k=1}^{+\infty} (a_k \cos kt + b_k \sin kt)$ is the usual Fourier expansion of f.

Then the following holds:

I. $$\int_0^{+\infty} f(t)e^{-zt}dt = a_0 \int_0^{+\infty} e^{-zt}dt + \sum_{k=1}^{+\infty} \left(a_k \int_0^{+\infty} e^{-zt}\cos kt + b_k \int_0^{+\infty} e^{-zt}\sin kt\, dt\right)$$

for all z with $\operatorname{Re} z \in (0,+\infty)$.

II. If $\delta \in (0,+\infty)$ the series on the right-hand side in I. converges absolutely and uniformly for all z with $\operatorname{Re} z \in (\delta,+\infty)$.

Proof. It is easy to prove that the functions

(1) $1, \cos t, \sin t, \cos 2t, \sin 2t, \ldots$

form an orthogonal system on $(0,2\pi)$ with respect to the wieght function

(2) $w(t) = 1$ for all $t \in (0,2\pi)$

such that

(3) $$\|1\|^2_{L^2(0,2\pi)} = 2\pi, \quad \|\cos kt\|^2_{L^2(0,2\pi)} = \pi, \quad \|\sin kt\|^2_{L^2(0,2\pi)} = \pi \quad (k = 1,2,\ldots$$

Therefore, by 1), (2), (3), 1.16 and 3.12,

$$\frac{1}{\|1\|^2_{L^2(0,2\pi)}}(f,1) = \frac{1}{2\pi}\int_0^{2\pi} f(t)\,dt = a_0,$$

$$\frac{1}{\|\cos kt\|^2_{L^2(0,2\pi)}}(f(t),\cos kt) = \frac{1}{\pi}\int_0^{2\pi} f(t)\cos kt\,dt = a_k \quad (k = 1,2,\ldots$$

$$\frac{1}{\|\sin kt\|^2_{L^2(0,2\pi)}}(f(t),\sin kt) = \frac{1}{\pi}\int_0^{2\pi} f(t)\sin kt\,dt = b_k \quad (k = 1,2,\ldots$$

so that the Fourier coefficients of f with respect to (1) as defined in 1.16 and 3.9 coincide with the usual Fourier coefficients of f. Finally, in view of V. in 4.1 for $[a,b] = [0,2\pi]$, $p = 2$, $w(t) = 1$ for all $t \in [0,2\pi]$, the system (1) is closed in the $L^2(0,2\pi)$-norm. Everything then follows from 18.1.

2. Remark. The prece ding result is new. An essential generalization, however, will be given in § 29.

§ 20. The term-by-term Laplace transformation of a Fourier expansion of $f \in L_w^2(a,b)$ in terms of orthogonal polynomials

1. Theorem. Suppose:

1) $-\infty < a < b < +\infty, \quad \delta \in (0,+\infty)$.

2) $0 < w(t) < +\infty$ for a.a. $t \in (a,b)$.

3) $\int_a^b w(t)\,dt < +\infty$.

4) $\int_a^b \frac{dt}{w(t)} < +\infty$.

5) y_k is a real polynomial of degree k $(k = 0,1,\ldots)$.

6) $y_0, y_1, \ldots$ is an orthogonal system on (a,b) with respect to w.

(By 1) and 3), $\int_a^b t^k\, w(t)dt$ is finite for $k = 0,1,\ldots$ so that, by 5.2, such polynomials exist, and each of them is uniquely determined up to an arbitrary non-zero real factor).

7) $\tilde{y}_k$ is a periodic extension of y_k from (a,b) into $(a,+\infty)$ with period $b-a$ $(k = 0,1,\ldots)$.

8) $f \in L_w^2(a,b)$ with period $b-a$.

9) $c_k(f)$ is the Fourier coefficient of f with respect to $y_k (k = 0,1,\ldots)$ (see 1.16 and 3.9 !) so that $f \sim \sum_{k=0}^{+\infty} c_k(f) y_k$.

Then the following holds:

I. $$\int_0^{+\infty} f(t+a)e^{-zt}dt = \sum_{k=0}^{+\infty} c_k(f) \int_0^{+\infty} \tilde{y}_k(t+a)e^{-zt} \quad \text{for} \quad \operatorname{Re} z \in (0,+\infty)$$

II. The series on the right-hand side of I. converges absolutely and uniformly for all z with $\operatorname{Re} z \in [\delta,+\infty)$.

Proof. By 14.1, the system $y_0, y_1, \ldots$ is closed in the $L_w^2(a,b)$-norm. The periodic extension of y_k from (a,b) into $(a,+\infty)$ with period $b-a$ does not change the function values of y_k in (a,b) and, consequently, it does not have any influence on the orthogonality and closedness of the system, and cannot change the Fourier coefficients of f with respect to the system. Everything then follows from 18.2.

2. Theorem. Suppose:

1) $\alpha,\beta \in (-1,1)$, $\delta \in (0,+\infty)$.

2) $w(t) = (1-t)^{\alpha}(1+t)^{\beta}$ for all $t \in (-1,1)$.

3) $p_k^{(\alpha,\beta)}$ is a Jacobi polynomial of degree k with the indices α,β $(k = 0,1,\ldots)$ (see 5.3 !).

4) $f \in L_w^2(-1,1)$.

5) $c_k(f)$ is the Fourier coefficient of f with respect to $p_k^{(\alpha,\beta)}$ $(k = 0,1,\ldots)$ (see 1.16 and 3.12 !) so that $f \sim \sum_{k=0}^{+\infty} c_k(f)\, p_k^{(\alpha,\beta)}$.

6) $p_k^{(\alpha,\beta)}$ is a periodic extension of $p_k^{(\alpha,\beta)}$ from $(-1,1)$ into $(-1,+\infty)$ with period 2 $(k = 0,1,\ldots)$.

Then the following holds:

I. $$\int_0^{+\infty} f(t-1)e^{-zt}dt = \sum_{k=0}^{+\infty} c_k(f) \int_0^{+\infty} p_k^{(\alpha,\beta)}(t-1)e^{-zt}dt$$

for $\operatorname{Re} z \in (0,+\infty)$.

II. <u>The series on the right-hand side of</u> I. <u>converges absolutely and uniformly for all</u> z <u>with</u> $\operatorname{Re} z \in [\delta,+\infty)$.

<u>Proof</u>. Since $\alpha,\beta \in (-1,1)$ the function w satisfies all the assumptions in 1. (Observe that if we took $\alpha,\beta \in [1,+\infty)$ the assumption 4) in 1. would not be satisfied.) By 3) and 5.3, $p_k^{(\alpha,\beta)}$ is a real polynomial of degree k $(k = 0,1,\ldots)$, and the system $p_0^{(\alpha,\beta)}, p_1^{(\alpha,\beta)},\ldots$ is orthogonal on $(-1,1)$ with respect to w. Everything then follows from 1.

<u>3. Theorem</u>. <u>Suppose</u>:

1) $\alpha \in (-1,1)$, $\delta \in (0,+\infty)$.

2) $w(t) = t^{\alpha}e^{-t}$ <u>for all</u> $t \in (0,+\infty)$.

3) $\ell_k^{(\alpha)}$ <u>is a Laguerre polynomial of degree</u> k <u>with index</u> α $(k = 0,1,\ldots)$ (see 5.3 !).

4) $f \in L_w^2(0,+\infty)$.

5) $c_k(f)$ <u>is the Fourier coefficient of</u> f <u>with respect to</u> $\ell_k^{(\alpha)}$ $(k = 0,1,\ldots)$ (see 1.16 and 3.9 !) <u>so that</u> $f \sim \sum_{k=0}^{+\infty} c_k(f)\,\ell_k^{(\alpha)}$.

<u>Then the following holds</u>:

I. $$\int_0^{+\infty} f(t)e^{-zt}dt = \sum_{k=0}^{+\infty} c_k(f) \int_0^{+\infty} \ell_k^{(\alpha)}(t)e^{-zt}dt$$ <u>for</u> $\operatorname{Re} z \in (\frac{1}{2},+\infty)$

II. <u>The series on the right-hand side of</u> I. <u>converges absolutely and uniformly for all</u> z <u>with</u> $\operatorname{Re} z \in [\delta, +\infty)$.

<u>Proof.</u> Since $\alpha \in (-1,1)$ the function w satisfies the assumptions 2) and 3) in 18.4. Next, using a well-known formula from the theory of the Laplace transformation, namely

$$(1) \qquad \int_0^{+\infty} t^v e^{-zt} dt = \frac{\Gamma(v+1)}{z^{v+1}} \quad \text{for } v \in (-1,+\infty),\ \operatorname{Re} z \in (0,+\infty),$$

we have

$$\int_0^{+\infty} \frac{1}{w(\frac{1}{2}t)} e^{-zt} dt \overset{2)}{=} \int_0^{+\infty} \frac{1}{(\frac{1}{2}t)^{\alpha} e^{-\frac{1}{2}t}} e^{-zt} dt = 2^{\alpha} \int_0^{+\infty} t^{-\alpha} e^{-(z-\frac{1}{2})t} dt$$

$$\overset{1),(1)}{=} \frac{2^{\alpha}\,\Gamma(1-\alpha)}{(z-\frac{1}{2})^{1-\alpha}} \quad \text{for } \operatorname{Re} z \in (\tfrac{1}{2}, +\infty)$$

so that the assumption 4) in 18.4 with $c = \frac{1}{2}$ is satisfied. (Observe that this need not be the case if $\alpha \in [1,+\infty)$.) By 3) and 5.3, $\ell_0^{(\alpha)}, \ell_1^{(\alpha)}, \ldots$ is an orthogonal system on $(0,+\infty)$ with respect to w such that $\| \ell_k^{(\alpha)} \| > 0$ for $k = 0,1,\ldots$. Everthing then follows from 18.4.

<u>4. Counter examples</u>. The same functions as in 16.6 may be applied to show that I. <u>in</u> 2. <u>need not be true if</u> $\alpha \in (1,+\infty)$ <u>or</u> $\beta \in (1,+\infty)$, <u>and</u> I. <u>in</u> 3. <u>need not be true for any large</u> $\operatorname{Re} z$ <u>if</u> $\alpha \in (1,+\infty)$.

<u>5. Remark</u>. All the results in this section are new.

§ 21. The case of the Hermite polynomials

1. Theorem. Suppose:

1) H_k is the standard Hermite polynomial of degree k $(k = 0,1,\ldots)$ (see 10.12).

2) $L_k^{(-\frac{1}{2})}$ is the standard Leguerre polynomial of degree k with index $-\frac{1}{2}$ $(k = 0,1,\ldots)$ (see 10.10).

3) $L_k^{(\frac{1}{2})}$ is the standard Laguerre polynomial of degree k with index $\frac{1}{2}$ $(k = 0,1,\ldots)$ (see 10,10).

Then the following formulae hold:

(1) $$H_{2k}(t) = 2^{2k} L_k^{(-\frac{1}{2})}(t^2) \quad \text{for } k = 0,1,\ldots \text{ and all complex } t,$$

(2) $$H_{2k+1}(t) = 2^{2k+1}\, t\, L_k^{(\frac{1}{2})}(t^2) \quad \text{for } k = 0,1,\ldots \text{ and all complex } t,$$

Proof. Set

(3) $$y_{2k}(t) = L_k^{(-\frac{1}{2})}(t^2) \quad \text{for } k = 0,1,\ldots \text{ and all complex } t,$$

(4) $$y_{2k+1}(t) = t\, L_k^{(\frac{1}{2})}(t^2) \quad \text{for } k = 0,1,\ldots \text{ and all complex } t.$$

Then obviously

(5) y_k is a polynomial of degree k with real coefficients $(k = 0,1,\ldots)$.

Next

$$\int_{-\infty}^{+\infty} y_{2h}(t)\, y_{2k}(t)\, e^{-t^2} dt \overset{(3)}{=} \int_{-\infty}^{+\infty} \overbrace{L_h^{(-\frac{1}{2})}(t^2)\, L_k^{(-\frac{1}{2})}(t^2) e^{-t^2}}^{\text{an even function}} dt =$$

$$= 2 \int_{0}^{+\infty} L_h^{(-\frac{1}{2})}(t^2)\, L_k^{(-\frac{1}{2})}(t^2) e^{-t^2} dt = \left| \begin{array}{ll} t^2 = u & \begin{array}{c|c} t & u \\ \hline 0 & 0 \\ +\infty & +\infty \end{array} \\ t = u^{\frac{1}{2}} & \\ dt = \frac{1}{2} u^{-\frac{1}{2}} du & \end{array} \right| =$$

$$= \int_{0}^{+\infty} L_h^{(-\frac{1}{2})}(u)\, L_k^{(-\frac{1}{2})}(u)\, u^{-\frac{1}{2}} e^{-u} du \overset{2)}{=} 0 \quad \text{for } h,k = 0,1,\ldots;\ h \neq k,$$

$$\int_{-\infty}^{+\infty} y_{2h+1}(t)\, y_{2k+1}(t)\, e^{-t^2} dt \overset{(4)}{=} \int_{-\infty}^{+\infty} \overbrace{t^2\, L_h^{(\frac{1}{2})}(t^2)\, L_k^{(\frac{1}{2})}(t^2)\, e^{-t^2}}^{\text{an even function}} dt =$$

$$= 2 \int_{0}^{+\infty} L_h^{(\frac{1}{2})}(t^2)\, L_k^{(\frac{1}{2})}(t^2)\, t^2 e^{-t^2} dt = \left| \begin{array}{ll} t^2 = u & \begin{array}{c|c} t & u \\ \hline 0 & 0 \\ +\infty & +\infty \end{array} \\ t = u^{\frac{1}{2}} & \\ dt = \frac{1}{2} u^{-\frac{1}{2}} du & \end{array} \right| =$$

$$= \int_{0}^{+\infty} L_h^{(\frac{1}{2})}(u)\, L_k^{(\frac{1}{2})}(u)\, u^{\frac{1}{2}} e^{-u} du \overset{3)}{=} 0 \quad \text{for } h,k = 0,1,\ldots;\ h \neq k;$$

$$\int_{-\infty}^{+\infty} y_{2h}(t)\, y_{2k+1}(t)\, e^{-t^2} dt \overset{(3),(4)}{=} \int_{-\infty}^{+\infty} \underbrace{L_h^{(\frac{1}{2})}(t^2)\, t\, L_k^{(\frac{1}{2})}(t^2)\, e^{-t^2}}_{\text{an odd function}} dt = 0$$

for $h,k = 0,1,\ldots$.

Consequently

(6) $\left\{ \begin{array}{l} y_0, y_1, \ldots \text{ is an orthogonal system on } (-\infty, +\infty) \text{ with respect} \\ \text{to } e^{-t^2}. \end{array} \right.$

By 1), (5), (6) and 5.2, there exist $0 \neq c_0, c_1, \ldots \in (-\infty, +\infty)$ such that

(7) $$H_k(t) = c_k\, y_k(t) \qquad \text{for } k = 0,1,\ldots \text{ and all complex } t.$$

By 1) and 10.13, the leading coefficient of the left-hand side of (7) is 2^k $(k = 0,1,\ldots)$. By (3), (4) and 10.11, the leading coefficient of the right-hand side of (7) is c_k $(k = 0,1,\ldots)$. Hence $c_k = 2^k$ for $k = 0,1,\ldots$ so that, by (7),

(8) $$H_k(t) = 2^k\, y_k(t) \qquad \text{for } k = 0,1,\ldots \text{ and all complex } t.$$

Setting (3) and (4) into (8) we obtain (1) and (2) respectively.

<u>2. Theorem</u>. <u>Let</u> f <u>be an even or odd function on</u> $(-\infty, +\infty)$. <u>Then</u>

(1) $$f \in L^2_{e^{-t^2}}(-\infty,+\infty) \iff f(\tau^{\frac{1}{2}}) \in L^2_{\tau^{-\frac{1}{2}} e^{-\tau}}(0,+\infty) \iff \frac{f(\tau^{\frac{1}{2}})}{\tau^{\frac{1}{2}}} \in L^2_{\tau^{\frac{1}{2}} e^{-\tau}}(0,+\infty)$$

<u>Proof</u>. Let f be even or odd on $(-\infty,+\infty)$. Then

$$\int_0^{+\infty} \left|f(\tau^{\frac{1}{2}})\right|^2 \tau^{-\frac{1}{2}} e^{-\tau}\, d\tau = \left| \begin{array}{l} \tau^{\frac{1}{2}} = t \\ \tau = t^2 \\ d\tau = 2t\, dt \end{array} \quad \begin{array}{c|c} \tau & t \\ \hline 0 & 0 \\ +\infty & +\infty \end{array} \right| = 2 \int_0^{+\infty} |f(t)|^2 e^{-t^2}\, dt =$$

$$\underset{=}{\overset{f = \text{even or odd}}{}} \int_{-\infty}^{+\infty} |f(t)|^2 e^{-t^2}\, dt$$

if at least one side is finite. Next

$$\int_0^{+\infty} \left| \frac{f(\tau^{\frac{1}{2}})}{\tau^{\frac{1}{2}}} \right|^2 \tau^{\frac{1}{2}} e^{-\tau}\, d\tau = \int_0^{+\infty} \left|f(\tau^{\frac{1}{2}})\right|^2 \tau^{-\frac{1}{2}} e^{-\tau}\, d\tau$$

if at least one side is finite. Hence (1) follows.

3. Theorem. Suppose:

1) f is an even function on $(-\infty,+\infty)$.

2) $f \in L^2_{e^{-t^2}}(-\infty,+\infty)$ (so that, by 2., $f(\tau^{\frac{1}{2}}) \in L^2_{\tau^{-\frac{1}{2}} e^{-\tau}}(0,+\infty)$).

Then

$$\left.\begin{aligned} c^{(H)}_{2k}(f) &= \frac{1}{2^{2k}}\, c^{(-\frac{1}{2})}_{k}\left[f(\tau^{\frac{1}{2}})\right] \\ c^{(H)}_{2k+1}(f) &= 0 \end{aligned}\right\} \text{ for } k = 0,1,\ldots$$

where $c^{(H)}_k(\varphi)$ and $c^{(-\frac{1}{2})}_k(\varphi)$ are the Fourier coefficients of φ with respect to the standard Hermite polynomial H_k of degree k and the standard Laguerre polynomial $L^{(-\frac{1}{2})}_k$ of degree k with index $-\frac{1}{2}$ respectively $(k = 0,1,\ldots)$.

Proof. By 5.5, 1) and 1.,

$$\int_{-\infty}^{+\infty} f(t)\, H_{2k}(t)\, e^{-t^2}\, dt = \left(\int_{-\infty}^{0} + \int_{0}^{+\infty} \right) f(t)\, H_{2k}(t)\, e^{-t^2}\, dt =$$

$$= \int_0^{+\infty} f(-u)\, \underbrace{H_{2k}(-u)}_{H_{2k}(u) \text{ by } 5.5}\, e^{-u^2}\, du + \int_0^{+\infty} f(u)\, H_{2k}(u)\, e^{-u^2}\, du = \int_0^{+\infty} \left[f(u)+f(-u)\right] H_{2k}(u) e^{-u^2}\, du$$

$$\overset{1)}{=} 2\int_0^{+\infty} f(u)\, H_{2k}(u) e^{-u^2}\, du \overset{1.}{=} 2^{2k+1} \int_0^{+\infty} f(u)\, L^{(-\frac{1}{2})}_k(u^2) e^{-u^2}\, du = \left| \begin{array}{l} u^2 = \tau \\ u = \tau^{\frac{1}{2}} \\ du = \frac{1}{2}\tau^{-\frac{1}{2}} d\tau \end{array} \quad \begin{array}{c|c} u & \tau \\ \hline 0 & 0 \\ +\infty & +\infty \end{array} \right.$$

$$= 2^{2k} \int_0^{+\infty} f(\tau^{\frac{1}{2}})\, L^{(-\frac{1}{2})}_k(\tau)\, \tau^{-\frac{1}{2}} e^{-\tau}\, d\tau \qquad \text{for } k = 0,1,\ldots .$$

(Observe that, by 2) and the Hölder inequality, the integrals on both the sides exist.) Hence

$$c_{2k}^{(H)}(f) = \frac{1}{\|H_{2k}\|^2_{L^2_{e^{-t^2}}(-\infty,+\infty)}} \int_{-\infty}^{+\infty} f(t)\, H_{2k}(t)\, e^{-t^2}\, dt =$$

$$= \frac{2^{2k}}{\|H_{2k}\|^2_{L^2_{e^{-t^2}}(-\infty,+\infty)}} \int_{0}^{+\infty} f(\tau^{\frac{1}{2}})\, L_k^{(-\frac{1}{2})}(\tau)\, \tau^{-\frac{1}{2}}\, e^{-\tau}\, d\tau =$$

$$= 2^{2k} \frac{\|L_k^{(-\frac{1}{2})}\|^2_{L^2_{\tau^{-\frac{1}{2}} e^{-\tau}}(-\infty,+\infty)}}{\|H_{2k}\|^2_{L^2_{e^{-t^2}}(-\infty,+\infty)}} \frac{1}{\|L_k^{(-\frac{1}{2})}\|^2_{L^2_{\tau^{-\frac{1}{2}} e^{-\tau}}(0,+\infty)}} \int_{0}^{+\infty} f(\tau^{\frac{1}{2}}) L_k^{(-\frac{1}{2})}(\tau)\, \tau^{-\frac{1}{2}} e^{-\tau}\, d\tau =$$

$$= 2^{2k} \frac{\|L_k^{(-\frac{1}{2})}\|^2_{L^2_{\tau^{-\frac{1}{2}} e^{-\tau}}(0,+\infty)}}{\|H_{2k}\|^2_{L^2_{e^{-t^2}}(-\infty,+\infty)}}\, c_k^{(-\frac{1}{2})}\left[f(\tau^{\frac{1}{2}})\right] \quad \text{for} \quad k = 0,1,\ldots \; .$$

But by 10.11, 10.13 and 6.9,

$$(2)\quad \left\{ \begin{aligned} & 2^{2k} \frac{\| L_k^{(-\frac{1}{2})} \|^2_{L^2_{\tau^{-\frac{1}{2}} e^{-\tau}(0,+\infty)}}}{\| H_{2k} \|^2_{L^2_{e^{-t^2}(-\infty,+\infty)}}} \overset{10.11,10.13}{=} \frac{k!\ \Gamma(k-\frac{1}{2}+1)}{(2k)!\ \sqrt{\pi}} = \\ & = \frac{k!}{(2k)!} \frac{\Gamma(k+\frac{1}{2})}{\sqrt{\pi}} \overset{6.9}{=} \frac{k!}{(2k)!} \frac{\frac{1}{2^{2k}} \frac{(2k)!}{k!} \sqrt{\pi}}{\sqrt{\pi}} = \frac{1}{2^{2k}} \quad \text{for } k = 0,1,\ldots \end{aligned} \right.$$

Setting (2) into (1) we obtain the first formula. Finally, by 1) and 5.5,

$$c^{(H)}_{2k+1}(f) = \frac{1}{\| H_{2k+1} \|^2_{L^2_{e^{-t^2}(-\infty,+\infty)}}} \int_{-\infty}^{+\infty} \underbrace{\underbrace{f(t)}_{\substack{\text{even}\\ \text{by 1)}}} \underbrace{H_{2k+1}(t)}_{\substack{\text{odd}\\ \text{by 5.5}}} \underbrace{e^{-t^2}}_{\text{even}}}_{\text{odd}} dt = 0 \quad \text{for } k = 0,1,\ldots,$$

which completes the proof.

<u>4. Theorem</u>. <u>Suppose</u>:

1) f <u>is an odd function on</u> $(-\infty,+\infty)$.

2) $f \in L^2_{e^{-t^2}}(-\infty,+\infty)$ (so that, by 2., $\dfrac{f(\tau^{\frac{1}{2}})}{\tau^{\frac{1}{2}}} \in L^2_{\tau^{\frac{1}{2}} e^{-\tau}}(0,+\infty)$).

Then

$$\left.\begin{aligned} c_{2k}^{(H)}(f) &= 0 \\ c_{2k+1}^{(H)}(f) &= \frac{1}{2^{2k+1}}\, c_k^{(\frac{1}{2})}\left[\frac{f(\tau^{\frac{1}{2}})}{\tau^{\frac{1}{2}}}\right] \end{aligned}\right\} \text{ for } k = 0,1,\ldots,$$

where $c_k^{(H)}(\varphi)$ and $c_k^{(\frac{1}{2})}(\varphi)$ are the Fourier coefficients of φ with respect to the standard Hermite polynomial H_k of degree k and the standard Laguerre polynomial $L_k^{(\frac{1}{2})}$ of degree k with index $\frac{1}{2}$ respectively $(k = 0,1,\ldots)$

Proof is similar as in 3.

5. Theorem. Suppose:

1) f is an even function on $(-\infty,+\infty)$.

2) $f \in L^2_{e^{-t^2}}(-\infty,+\infty)$.

3) $c_k(f)$ is the Fourier coefficient of f with respect to the standard Hermite polynomial H_k of degree k $(k = 0,1,\ldots)$.

(By 1), 2), 3) and 3., $f(t) \sim \sum_{k=0}^{+\infty} c_{2k}(f)\, H_{2k}(t)$.)

4) $\delta \in (0,+\infty)$.

Then the following is true:

I. $$\int_0^{+\infty} f(t^{\frac{1}{2}})\, e^{-zt}dt = \sum_{k=0}^{+\infty} c_{2k}(f) \int_0^{+\infty} H_{2k}(t^{\frac{1}{2}})\, e^{-zt}\, dt$$

for $\operatorname{Re} z \in (0,+\infty)$.

II. <u>The series on the right-hand side of</u> I. <u>converges absolutely and uniformly for all</u> z <u>with</u> $\operatorname{Re} z \in [\delta, +\infty)$.

<u>Proof</u>. By 1), 2) and 2., $f(t^{\frac{1}{2}}) \quad L^2_{t^{-\frac{1}{2}}e^{-t}}(0,+\infty)$. Let $L_k^{(-\frac{1}{2})}$ be the standard Laguerre polynomial of degree k with index $-\frac{1}{2}$ so that, by 1.,

$$(1) \qquad L_k^{(-\frac{1}{2})}(t) = \frac{1}{2^{2k}} H_{2k}(t^{\frac{1}{2}}) \quad \text{for all } t \in (0,+\infty), \quad k = 0,1,\ldots$$

Let $c_k^{(-\frac{1}{2})} f(t^{\frac{1}{2}})$ be the standard Fourier coefficient of $f(t^{\frac{1}{2}})$ with respect to $L_k^{(-\frac{1}{2})}(t)$ so that, by 3.,

$$(2) \qquad c_k^{(-\frac{1}{2})}[f(t^{\frac{1}{2}})] = 2^{2k} c_{2k}(f) \qquad \text{for } k = 0,1,\ldots .$$

By 20.3,

$$(13) \quad \begin{cases} \displaystyle\int_0^{+\infty} f(t^{\frac{1}{2}})e^{-zt}dt = \sum_{k=0}^{+\infty} c_k^{(-\frac{1}{2})}[f(t^{\frac{1}{2}})] \int_0^{+\infty} L_k^{(-\frac{1}{2})}(t)e^{-zt}dt \\ \qquad \text{for } \operatorname{Re} z \in (0,+\infty), \end{cases}$$

where the series on the right-hand side converges absolutely and uniformly for all z with $\operatorname{Re} z \in [\delta, +\infty)$. Setting (1) and (2) into (3) we obtain the result.

<u>6. Theorem</u>. <u>Suppose</u>:

1) f <u>is an odd function on</u> $(-\infty,+\infty)$.

2) $f \in L^2_{e^{-t^2}}(-\infty,+\infty)$.

3) $c_k(f)$ <u>is the Fourier coefficient of</u> f <u>with respect to the standard Hermite polynomial</u> H_k <u>of degree</u> k $(k = 0,1,\ldots)$.

(By 1), 2), 3) and 4., $f(t) \sim \sum_{k=0}^{+\infty} c_{2k+1}(f)\, H_{2k+1}(t)$.)

4) $\delta \in (0,+\infty)$.

<u>Then the following holds</u>:

I. $$\int_0^{+\infty} \frac{f(t^{\frac{1}{2}})}{t^{\frac{1}{2}}} e^{-zt} dt = \sum_{k=0}^{+\infty} c_{2k+1}(f) \int_0^{+\infty} \frac{H_{2k+1}(t^{\frac{1}{2}})}{t^{\frac{1}{2}}} e^{-zt}\, dt$$

<u>for</u> $\operatorname{Re} z \in (0,+\infty)$.

II. <u>The series on the right-hand side of</u> I. <u>converges absolutely and uniformly for all</u> z <u>with</u> $\operatorname{Re} z \in [\delta,+\infty)$.

<u>Proof</u>. By 1), 2) and 2., $\frac{f(t^{\frac{1}{2}})}{t^{\frac{1}{2}}} \in L^2_{t^{\frac{1}{2}}e^{-t}}(0,+\infty)$. Let $L_k^{(\frac{1}{2})}$ be the standard Laguerre polynomial of degree k with index $\frac{1}{2}$ so that, by 1.,

(1) $$L_k^{(\frac{1}{2})}(t) = \frac{1}{2^{2k+1}} \frac{H_{2k+1}(t^{\frac{1}{2}})}{t^{\frac{1}{2}}} \quad \text{for all } t \in (0,+\infty),\ k = 0,1,\ldots$$

Let $c_k^{(\frac{1}{2})}\left[\frac{f(t^{\frac{1}{2}})}{t^{\frac{1}{2}}}\right]$ be the Fourier coefficient of $\frac{f(t^{\frac{1}{2}})}{t^{\frac{1}{2}}}$ with respect to $L_k^{(\frac{1}{2})}$ so that, by 4.,

$$(2) \qquad c_k^{(\frac{1}{2})}\left[\frac{f(t^{\frac{1}{2}})}{t^{\frac{1}{2}}}\right] = 2^{2k+1}\, c_{2k+1}(t) \qquad \text{for } k = 0,1,\ldots$$

By 20.3

$$(3) \qquad \int_0^{+\infty} \frac{f(t^{\frac{1}{2}})}{t^{\frac{1}{2}}}\, e^{-zt}\, dt = \sum_{k=0}^{+\infty} c_k^{(\frac{1}{2})}\left[\frac{f(t^{\frac{1}{2}})}{t^{\frac{1}{2}}}\right] \int_0^{+\infty} L_k^{(\frac{1}{2})}(t) e^{-zt} dt$$

$$\text{for } \operatorname{Re} z \in (0,+\infty).$$

where the series on the right-hand side converges absolutely and uniformly for all z with $\operatorname{Re} z \in [\delta,+\infty)$. Setting (1) and (2) into (3) we obtain the results.

7. Remarks. The short and elementary proof of 1. was suggested in Szegö (14) pp. 102-103. Surprisingly enough, some other authors e.g. Tricomi (15) pp. 228-229. have applied confluent hypergeometric functions to the same purpose, which is superfluous and surely not simpler.

The result in 2. may also be found in the book by Tricomi (15) quoted above.

The results in 3.- 6. appear to be new.

CHAPTER 4.:

The term-by-term integration and Laplace transformation of the Fourier expansion of $f \notin L_w^2(a,b)$ with respect to an orthogonal system in $L_w^2(a,b)$

§ 22. The Fourier expansion of a function $f \notin L_w^2(a,b)$

1. Definition. Suppose:

1) $-\infty \leq a < b \leq +\infty$.

2) $0 < w(t) < +\infty$ for a.a. $t \in (a,b)$.

3) w is measurable on (a,b).

4) y_k is measurable on (a,b), $0 < \| y_k \|_{L_w^2(a,b)} < +\infty$ for $k = 0,1,\ldots$.

5) $y_0, y_1, \ldots$ is an orthogonal system on (a,b) with respect to w.

6) f is a measurable function on (a,b) (but not necessarily in $L_w^2(a,b)$) such that

$$c_k(f) = \frac{1}{\| y_k \|^2_{L_w^2(a,b)}} \int_a^b f(t)\, \overline{y_k(t)}\, w(t)dt \quad \text{is finite } (k = 0,1,\ldots).$$

Then $c_0(f), c_1(f), \ldots$ are said to be the Fourier coefficients of f with respect to $y_0, y_1, \ldots$ and $\sum_{k=0}^{+\infty} c_k(f)\, y_k(t)$ is said to be the Fourier series of $f(t)$ with respect to the orthogonal system $y_0, y_1, \ldots$. If $f(t)$ has the Fourier series $\sum_{k=0}^{+\infty} c_k(f)\, y_k(t)$ with respect to the orthogonal system $y_0, y_1, \ldots$, we write $f(t) \sim \sum_{k=0}^{+\infty} c_k(f)\, y_k(t)$.

2. Remarks. If $f \in L_w^2(a,b)$ then, by 3.9 and 1.16, the definitions of the Fourier coefficients and Fourier series of f with respect to $y_0, y_1, \ldots$ in 1.16 above and in section 1. are identical.

3. Mercer's theorem. Suppose:

1) $-\infty \leq a < b \leq +\infty$.

2) $0 < w(t) < +\infty$ for a.a. $t \in (a,b)$.

3) $\int_a^b w(t)dt < +\infty$. (By 1) and 2), w = a weight function on (a,b).)

4) y_k is measurable on (a,b), $0 < \| y_k \|_{L_w^2(a,b)} < +\infty$ for $k = 0,1,\ldots$.

5) $y_0, y_1, \ldots$ is an orthogonal system on (a,b) with respect to w.

6) $| y_k(t) | \leq M < +\infty$ for a.a. $t \in (a,b)$, and all $k = 0,1,\ldots$.

7) $f \in L_w(a,b)$.

Then the following holds:

I. The Fourier coefficients $c_0(f), c_1(f), \ldots$ of f with respect to $y_0, y_1, \ldots$ exist.

II. $\lim_{k \to +\infty} c_k(f) \| y_k \|^2_{L_w^2(a,b)} = 0$.

Proof. I. immediately follows from 1., 6) and 7).

II. Fix any $\varepsilon \in (0,+\infty)$. By 7), I. in 4.1 and I. in 4.2, there exists a function g such that

(1) g is bounded and measurable on (a,b),

(2) $$\int_a^b |f(t) - g(t)|\, w(t)dt < \frac{1}{2}\,\frac{1}{M+1}\,\varepsilon .$$

By 6) and (2),

(3) $$\left| \int_a^b [f(t) - g(t)]\, \overline{y_k(t)}\, w(t)dt \right| \overset{6)}{\leq} M \int_a^b |f(t) - g(t)|\, w(t)\, dt \overset{(2)}{<} \overset{(2)}{<} \frac{1}{2}\,\varepsilon \quad \text{for} \quad k = 0,1,\ldots \ .$$

By 6) and 3),

(4) $$\| y_k \|_{L_w^2(a,b)} = \left[\int_a^b |y_k(t)|^2\, w(t)dt \right]^{\frac{1}{2}} \overset{6)}{\leq} M \left[\int_a^b w(t)dt \right]^{\frac{1}{2}} \overset{3)}{=} A < +\infty \quad \text{for} \quad k = 0,1,\ldots \ .$$

By (1) and 3), $g \in L_w^2(a,b)$. Therefore, by the Riemann-Lebesgue theorem 1.23, the Fourier coefficients $c_0(g), c_1(g),\ldots$ of g with respect to $y_0, y_1,\ldots$ satisfy the condition $\lim_{k \to +\infty} c_k(g)\, \| y_k \|_{L_w^2(a,b)} = 0$. Consequently there exists k_0 such that

(5) $$|c_k(g)|\, \| y_k \|_{L_w^2(a,b)} < \frac{1}{2}\,\frac{1}{A+1}\,\varepsilon \quad \text{for all} \quad k > k_0 .$$

By 2., (4) and (5),

$$(6)\quad \begin{cases} \left| \int_a^b g(t)\,\overline{y_k(t)}\,w(t)\,dt \right| \overset{2.}{=} |c_k(g)|\,\|y_k\|^2_{L^2_w(a,b)} = \\ = \|y_k\|_{L^2_w(a,b)}\,|c_k(g)|\,\|y_k\|_{L^2_w(a,b)} \overset{(4),(5)}{<} A\,\frac{1}{2}\,\frac{1}{A+1}\,\varepsilon < \frac{1}{2}\,\varepsilon \\ \text{for all } k > k_0. \end{cases}$$

Finally, by 1., (3) and (6),

$$|c_k(f)|\,\|y_k\|^2_{L^2_w(a,b)} \overset{1.}{=} \left| \int_a^b f(t)\,\overline{y_k(t)}\,w(t)dt \right| \leq$$

$$\leq \left| \int_a^b [f(t) - g(t)]\,\overline{y_k(t)}\,w(t)dt \right| + \left| \int_a^b g(t)\,\overline{y_k(t)}\,w(t)dt \right| \overset{(3),(6)}{<}$$

$$\overset{(3),(6)}{<} \frac{1}{2}\varepsilon + \frac{1}{2}\varepsilon = \varepsilon \qquad \text{for all } k > k_0,$$

which completes the proof.

§ 23. The term-by-term integration and Laplace transformation of the Fourier expansion of a function $f \notin L_w^2(a,b)$

1. Theorem. Suppose:

1) $-\infty \leq a < b \leq +\infty$.

2) $0 < w(t) < +\infty$ for a.a. $t \in (a,b)$.

3) w is measurable on (a,b).

4) y_k is real, measurable on (a,b), $0 < \| y_k \|_{L_w^2(a,b)} < +\infty$ for $k = 0,1,\ldots$.

5) $y_0, y_1, \ldots$ is an orthogonal system on (a,b) with respect to w.

6) A measurable function f on (a,b) (but not necessarily in $L_w^2(a,b)$) has finite Fourier coefficients with respect to y_k:

$$(1) \qquad c_k(f) = \frac{1}{\| y_k \|^2_{L_w^2(a,b)}} \int_a^b f(t)\, y_k(t)\, w(t)\, dt \quad (k = 0,1,\ldots).$$

7) g is a measurable function on (a,b) such that the function $\frac{g}{w}$ (not necessarily in $L_w^2(a,b)$) has finite Fourier coefficients with respect to y_k

$$(2)\quad \begin{cases} c_k\left(\frac{g}{w}\right) = \dfrac{1}{\|y_k\|^2_{L^2_w(a,b)}} \displaystyle\int_a^b \frac{g(t)}{w(t)}\, y_k(t)\, w(t)\, dt = \\[2ex] = \dfrac{1}{\|y_k\|^2_{L^2_w(a,b)}} \displaystyle\int_a^b g(t)\, y_k(t)\, dt \quad (k = 0,1,\ldots). \end{cases}$$

8) $\dfrac{g(t)}{w(t)} = \displaystyle\sum_{k=0}^{+\infty} c_k\left(\frac{g}{w}\right) y_k(t)$ <u>for a.a.</u> $t \in (a,b)$.

9) h <u>is a function on</u> (a,b) <u>such that the partial sums</u> $s_n(\frac{g}{w};\, t)$ <u>of the Fourier series in</u> 8) <u>satisfy the condition</u> $\left|s_n(\frac{g}{w};\, t)\right| \leq |h(t)|$ <u>for</u> $n = 0,1,\ldots,$ <u>and a.a.</u> $t \in (a,b)$.

10) $f.h \in L_w(a,b)$.

<u>Then the following holds</u>:

I. $f.g \in L(a,b)$.

II. $\displaystyle\int_a^b f(t)g(t)dt = \sum_{k=0}^{+\infty} c_k(f)\, c_k\left(\frac{g}{w}\right) \|y_k\|^2_{L^2_w(a,b)}$

(<u>the Parceval equality</u>).

III. $\displaystyle\int_a^b f(t)g(t)dt = \sum_{k=0}^{+\infty} c_k(f) \int_a^b g(t)y_k(t)dt.$

Proof. By 2), 8), 9) and 10),

$$f(t)g(t) \overset{2)}{=} f(t)\,\frac{g(t)}{w(t)}\,w(t) \overset{8)}{=} \lim_{n\to+\infty} f(t)s_n\left(\frac{g}{w};\,t\right)w(t) \text{ for a.a. } t \in (a,b),$$

$$\left|f(t)s_n\left(\frac{g}{w};\,t\right)w(t)\right| \overset{9)}{\leq} \underbrace{|f(t)h(t)|\,w(t)}_{\in L(a,b) \text{ by } 10)} \quad \text{for } n = 0,1,\ldots, \text{ and a.a. } t \in (a,b)$$

Consequently, by (3), the Lebesgue dominated convergence theorem, (1) and (2),

$$\int_a^b f(t)g(t)dt \text{ exists,}$$

$$\int_a^b f(t)g(t)dt \overset{(3),\text{Lebesgue dom.th.}}{=} \lim_{n\to+\infty}\int_a^b f(t)\,s_n\left(\frac{g}{w};\,t\right)w(t)dt =$$

$$= \lim_{n\to+\infty}\int_a^b f(t)\sum_{k=0}^{n} c_k\left(\frac{g}{w}\right)y_k(t)w(t)dt = \lim_{n\to+\infty}\sum_{k=0}^{n} c_k\left(\frac{g}{w}\right)\int_a^b f(t)y_k(t)w(t)dt =$$

$$= \sum_{k=0}^{+\infty} c_k\left(\frac{g}{w}\right)\int_a^b f(t)y_k(t)w(t)dt \overset{(1)}{=} \sum_{k=0}^{+\infty} c_k(f)c_k\left(\frac{g}{w}\right)\|y_k\|^2_{L^2_w(a,b)} \overset{(2)}{=}$$

$$= \sum_{k=0}^{+\infty} c_k(f)\int_a^b g(t)y_k(f)dt,$$

which completes the proof.

2. Theorem. Suppose:

1) $-\infty \leq a < b \leq +\infty, \quad a \leq x_0 \leq x \leq b.$

2) $0 < w(t) < +\infty$ for a.a. $t \in (a,b)$.

3) w is measurable on (a,b).

4) y_k is real, measurable on (a,b), $0 < \|y_k\|_{L^2_w(a,b)} < +\infty$ for $k = 0,1,\ldots$.

5) $y_0, y_1, \ldots$ is an orthogonal system on (a,b) with respect to w.

6) A measurable function f on (a,b) (but not necessarily in $L^2_w(a,b)$) has finite Fourier coefficients with respect to y_k:

$$c_k(f) = \frac{1}{\|y_k\|^2_{L^2_w(a,b)}} \int_a^b f(t)y_k(t)w(t)dt \qquad (k = 0,1,\ldots). \tag{1}$$

7) The function

$$\varphi_{x_0,x}(t) = \begin{cases} \dfrac{1}{w(t)} & \text{for all} \quad t \in [x_0,x], \\ 0 & \text{for all} \quad t \in (a,b) - [x_0,x], \end{cases} \tag{2}$$

(which does not necessarily belong to $L^2_w(a,b)$), has finite Fourier coefficients with respect to y_k

$$\begin{cases} c_k(\varphi_{x_0,x}) = \dfrac{1}{\|y_k\|^2_{L^2_w(a,b)}} \displaystyle\int_a^b \varphi_{x_0,x}(t)y_k(t)w(t)dt = \\ = \dfrac{1}{\|y_k\|^2_{L^2_w(a,b)}} \displaystyle\int_{x_0}^x y_k(t)dt \qquad (k = 0,1,\ldots). \end{cases} \tag{3}$$

8) $$\varphi_{x_0,x}(t) = \sum_{k=0}^{+\infty} c_k(\varphi_{x_0,x})\, y_k(t) \quad \underline{\text{for a.a.}} \quad t \in (a,b).$$

9) h <u>is a function on</u> (a,b) <u>such that the partial sums</u> $s_n(\varphi_{x_0,x};\, t)$ <u>of the Fourier series in</u> 8) <u>satisfy the condition</u>

$$|s_n(\varphi_{x_0,x};\, t)| \leq |h(t)| \quad \text{for} \quad n = 0,1,\ldots, \ \underline{\text{and a.a.}} \quad t \in (a,b).$$

10) $f.h \in L_w(a,b)$.

<u>Then the following holds:</u>

I. $f \in L(x_0,x)$.

II. $$\int_{x_0}^{x} f(t)dt = \sum_{k=0}^{+\infty} c_k(f) \int_{x_0}^{x} y_k(t)dt.$$

<u>Proof</u>. Set

(4) $$g(t) = \begin{cases} 1 & \text{for all} \quad t \in [x_0,x], \\ 0 & \text{for all} \quad t \in (a,b) - [x_0,x]. \end{cases}$$

Then by (2),

(5) $$\varphi_{x_0,x}(t) = \frac{g(t)}{w(t)} \quad \text{for all} \quad t \in [a,b]$$

so that, by 7)- 9), the function $\frac{g}{w}$ satisfies the assumptions 7)- 9) in 1. Consequently all the assumptions in 1. are satisfied, and from I. and III. in 1. and (4) the statements I. and II. easily follow.

3. Theorem. Suppose:

1) $-\infty < a < b < +\infty$, $\operatorname{Re} z \in (0,+\infty)$.

2) $0 < w(t) < +\infty$ for almost all $t \in (a,b)$.

3) w is measurable on (a,b).

4) y_k is real, measurable on (a,b), $0 < \| y_k \|_{L^2_w(a,b)} < +\infty$ for $k = 0,1,\ldots$.

5) $y_0, y_1, \ldots$ is an orthogonal system on (a,b) with respect to w.

6) $\tilde{y}_k$ is the periodic extension of y_k from (a,b) into $[a,+\infty)$ with period $b-a$.

7) A measurable function $f(t)$ on (a,b) (but not necessarily in $L^2_w(a,b)$) extended periodically to $[a,\infty)$ with period $b-a$ has finite Fourier coefficients with respect to y_k:

$$c_k(f) = \frac{1}{\| y_k \|^2_{L^2_w(a,b)}} \int_a^b f(t) y_k(t) w(t) dt \quad (k = 0,1,\ldots). \tag{1}$$

8) The function $\frac{e^{-zt}}{w(t)}$ has finite Fourier coefficients with respect to y_k

$$\left\{ \begin{aligned} c_k\left[\frac{e^{-zt}}{w(t)}\right] &= \frac{1}{\| y_k \|^2_{L^2_w(a,b)}} \int_a^b \frac{e^{-zt}}{w(t)} y_k(t)\, w(t)\, dt = \\ &= \frac{1}{\| y_k \|^2_{L^2_w(a,b)}} \int_a^b y_k(t)\, e^{-zt} dt \quad (k = 0,1,\ldots). \end{aligned} \right. \tag{2}$$

9) $$\frac{e^{-zt}}{w(t)} = \sum_{k=0}^{+\infty} c_k \left[\frac{e^{-zt}}{w(t)} \right] y_k(t) \quad \underline{\text{for almost all}} \quad t \in (a,b).$$

10) h <u>is a function on</u> (a,b) <u>such that the partial sums</u>

$s_n \left[\frac{e^{-zt}}{w(t)} ; t \right]$ <u>of the Fourier series in</u> 9) <u>satisfy the condition</u>

$\left| s_n \left[\frac{e^{-zt}}{w(t)} ; t \right] \right| \leq |h(t)|$ <u>for</u> $n = 0,1,\ldots,$ <u>and almost all</u> $t \in (a,b)$.

11) $f.h \in L_w(a,b)$.

<u>Then</u> $$\int_0^{+\infty} f(t+a)e^{-zt}dt = \sum_{k=0}^{+\infty} c_k(f) \int_0^{+\infty} \tilde{y}_k(t+a)e^{-zt}dt.$$

<u>Proof.</u> Set

(3) $$g(t) = e^{-z(t-a)} = e^{az}\, e^{-zt} \qquad \text{for all} \quad t \in (a,b).$$

By (3) and 8) - 10), the function $\frac{g(t)}{w(t)} \overset{(3)}{=} e^{az} \frac{e^{-zt}}{w(t)}$ on (a,b) has finite Fourier coefficients with respect to y_k, namely

(4) $$c_k\left(\frac{g}{w}\right) \overset{(3)}{=} e^{az}\, c_k \left[\frac{e^{-zt}}{w(t)} \right] \qquad (k = 0,1,\ldots).$$

Next

(5) $$\left\{ \begin{aligned} &\frac{g(t)}{w(t)} \overset{(3)}{=} e^{az} \frac{e^{-zt}}{w(t)} \overset{9)}{=} e^{az} \sum_{k=0}^{+\infty} c_k \left[\frac{e^{-zt}}{w(t)} \right] y_k(t) \overset{(4)}{=} \\ &\overset{(4)}{=} \sum_{k=0}^{+\infty} c_k\left(\frac{g}{w}\right) y_k(t) \qquad \text{for almost all} \quad t \in (a,b), \end{aligned} \right.$$

and finally, the partial sums $s_n(\frac{g}{w};\ t)$ of the Fourier series in (5) satisfy the condition

$$(6)\qquad \left| s_n\left(\frac{g}{w};\ t\right)\right| \overset{(3)}{=} |e^{az}| \left| s_n\left[\frac{e^{-zt}}{w(t)}\right]\right| \overset{10)}{\leq} |e^{az}|\,|h(t)| \quad \text{for} \quad n = 0,1,\ldots,$$

and almost all $t \in (a,b)$.

Consequently the assumptions 7)- 10) in 1. with $e^{az}\,h(t)$ instead of h are satisfied so that, by I. and III. in 1.,

$$(7)\qquad \int_0^{b-a} |f(u+a)e^{-zu}|\,du = \int_a^b |f(t)e^{-z(t-a)}|\,dt \overset{(3)}{=} \int_a^b |f(t)g(t)|\,dt \overset{1.}{<} +\infty,$$

$$(8)\qquad \left\{\begin{aligned} &\int_0^{b-a} f(u+a)e^{-zu}du = \int_a^b f(t)e^{-z(t-a)}dt \overset{(3)}{=} \int_a^b f(t)g(t)dt \overset{1.}{=} \\ &\overset{1.}{=} \sum_{k=0}^{+\infty} c_k(f) \int_a^b y_k(t)g(t)dt \overset{(3)}{=} \sum_{k=0}^{+\infty} c_k(f) \int_a^b y_k(t)e^{-z(t-a)}dt = \\ &= \sum_{k=0}^{+\infty} c_k(f) \int_0^{b-a} y_k(u+a)e^{-zu}du \overset{6)}{=} \sum_{k=0}^{+\infty} c_k(f) \int_0^{b-a} \tilde{y}_k(u+a)e^{-zu}du. \end{aligned}\right.$$

Since the function e^{-zu} of u is bounded for $u \in [0,b-a]$ it follows from (7) and (8) that also

$$(9)\qquad \underbrace{f(u+a),\ \tilde{y}_k(u+a)}_{\text{functions of } u} \in L(0,b-a) \qquad (k = 0,1,\ldots).$$

But (9), (8) and the extension theorem 17.2 imply

$$\int_0^{+\infty} f(u+a)e^{-zu}du = \sum_{k=0}^{+\infty} c_k(f) \int_0^{+\infty} \tilde{y}_k(u+a)e^{-zu}du,$$

which completes the proof.

4. Remark. The results in this section are new.

§ 24. The Haar system

1. Definition. The Haar system is the system of functions $h_0^{(0)}$, $h_m^{(k)}$ $(k = 1,2,\ldots, 2^m;\ m = 0,1,\ldots)$ on $[0,1]$ defined as follows:

$$h_0^{(0)}(t) = 1 \quad \text{for all} \quad t \in [0,1],$$

$$h_m^{(k)}(t) = \begin{cases} 2^{\frac{1}{2}m} & \text{for all} \quad t \in \left(\dfrac{k-1}{2^m}, \dfrac{k-\frac{1}{2}}{2^m}\right), \\ -2^{\frac{1}{2}m} & \text{for all} \quad t \in \left(\dfrac{k-\frac{1}{2}}{2^m}, \dfrac{k}{2^m}\right), \\ 0 & \text{for all} \quad t \in \left[0, \dfrac{k-1}{2^m}\right) \cup \left(\dfrac{k}{2^m}, 1\right] \end{cases} \qquad (k = 1,2,\ldots,2^m;\ m = 0,1,\ldots)$$

The function $h_m^{(k)}$ $(k = 1,2,\ldots,2^m;\ m = 0,1,\ldots)$ has not been defined for $t = \dfrac{k-1}{2^m}, \dfrac{k-\frac{1}{2}}{2^m}, \dfrac{k}{2^m}$ in the above but we shall now do so for the sake of completeness only since the function values of $h_m^{(k)}$ at those three points will not have any importance for us in the sequel. First we set $h_m^{(k)}\left(\dfrac{k-\frac{1}{2}}{2^m}\right) = 0$ for all k,m in question. Next, if any of the points $\dfrac{k-1}{2^m}$ and $\dfrac{k}{2^m}$ is 0 or 1, i.e. if $k = 1$ or $k = 2^m$, we define the corresponding value of $k_m^{(k)}$ as its one-sided limit from $(0,1)$, i.e. as $2^{\frac{1}{2}m}$ or $2^{-\frac{1}{2}m}$ respectively. In all the other cases we define the missing values of $h_m^{(k)}$ as the average of its limits from the left and right at the point in question.

2. Theorem. Each of the Haar functions is bounded on $[0,1]$ and thus belongs to $L^p(0,1)$ for all $1 \leq p < +\infty$.

Proof. By 1.

3. Theorem. The Haar system is orthonormal on $(0,1)$ with respect to the weight function $w(t) = 1$ for all $t \in [0,1]$.

Proof. By 2., all the Haar functions belong to $L^2(0,1)$. Next, by 1.,

$$\| h_m^{(k)} \|^2_{L^2(0,1)} = \int_0^1 |h_m^{(k)}(t)|^2 \, dt = \begin{cases} 1 & \text{for } m = 0 \text{ and } k = 0,1. \\ 2(2^{\frac{1}{2}m})^2 \dfrac{1}{2^{m+1}} = 1 & \text{for } k = 1,2,\dots,2^m; \\ & m = 1,2,\dots \end{cases}$$

Expressing the corresponding Haar functions in accordance with 1. we find that

$$\int_0^1 h_0^{(0)}(t)\, h_0^{(1)}(t)dt = 0$$

$$\int_0^1 h_0^{(0)}(t)\, h_m^{(k)}(t)dt = \int_0^1 h_0^{(1)}(t)\, h_m^{(k)}(t)dt = 0 \quad \text{for } k = 1,2,\dots,2^m;\ m = 1,2,\dots \ .$$

Finally, let $m,n = 1,2,\dots;\ k = 1,2,\dots,2^m;\ \ell = 1,2,\dots,2^n$.

If $m=n,\ k \neq \ell$, then $h_m^{(k)}(t)\, h_n^{(\ell)}(t) = 0$ for a.a. $t \in [0,1]$ so that

$$\int_0^1 h_m^{(k)}(t)\, h_n^{(\ell)}(t)dt = 0 \qquad \text{for} \quad m = n, \quad k \neq \ell .$$

If $m < n$ then, by 1.,

$$\int_0^1 h_m^{(k)}(t)\, h_n^{(\ell)}(t)dt \overset{1.}{=} 2^{\frac{1}{2}n} \int_{\frac{\ell-1}{2^n}}^{\frac{\ell-\frac{1}{2}}{2^n}} h_m^{(k)}(t)dt - 2^{\frac{1}{2}n} \int_{\frac{\ell-\frac{1}{2}}{2^n}}^{\frac{\ell}{2^n}} h_m^{(k)}dt \overset{1,m<n}{=} 0 (m<n)$$

From all this the result follows.

<u>4. Theorem.</u> <u>Suppose:</u>

1) $h_0^{(0)}$, $h_m^{(k)}$ $(k = 1,2,\ldots,2^n;\ m = 0,1,\ldots)$ <u>is the Haar system.</u>

2) $f \in L(0,1)$.

<u>Then the following holds:</u>

I. <u>The Fourier coefficients</u> $c_m^{(k)}(f)$ <u>of</u> f <u>with respect to</u> $h_m^{(k)}$ <u>as defined by means of the formulae in</u> 22.1, <u>i.e.</u>

$$(1) \qquad c_m^{(k)}(f) = \frac{1}{\| h_m^{(k)} \|^2_{L^2(0,1)}} \int_0^1 f(t)\, h_m^{(k)}(t)dt \overset{3.}{=} \int_0^1 f(t)\, h_m^{(k)}(t)dt,$$

<u>are finite for all</u> k,m <u>in question so that</u> f <u>has the Fourier expansion in terms of the Haar system</u>

$$(2) \qquad f(x) \sim c_0^{(0)}(f)\, h_0^{(0)}(x) + \ldots + \underbrace{c_m^{(1)}(f)\, h_m^{(1)}(x) + \ldots + c_m^{(2^m)}(f)\, h_m^{(2^m)}(x) + \ldots}_{\text{for } m = 0,1,\ldots} + \ldots$$

II. <u>The Fourier expansion in</u> (2) <u>converges to</u> $f(x)$ <u>for almost all</u> $x \in [0,1]$.

III. <u>If</u> $|f(t)| \leq A < +\infty$ <u>for almost all</u> $t \in [0,1]$ <u>then the partial sums</u> $s_m^{(k)}(x) = c_0^{(0)}(f)\, h_0^{(0)}(x) + \ldots + c_m^{(k)}(f)\, h_m^{(k)}(x)$ <u>of the Fourier expansion</u> (2) <u>satisfy the inequality</u> $|s_m^{(k)}(x)| \leq A$ <u>for almost all</u> $x \in [0,1]$ <u>and all</u> k,m <u>in question</u>.

<u>Proof</u>. I. Immediately follows from 2. and 2).

II. By (1),

$$(3) \qquad c_m^{(k)}(f)\, h_m^{(k)}(x) \overset{(1)}{=} \int_0^1 f(t)\, h_m^{(k)}(x)\, h_m^{(k)}(t)dt$$

for all $x, t \in [0,1]$ and all appropriate k,m. Fix any pair of such indices k_0, m_0 and consider the partial sum

$$(4) \qquad s_{m_0}^{(k_0)}(x) = c_0^{(0)}(f)\, h_0^{(0)}(x) + \ldots + c_m^{(k)}(f)\, h_m^{(k)}(x) + \ldots + c_{m_0}^{(k_0)}(f)\, h_{m_0}^{(k_0)}(x)$$

of the Fourier expansion in (2) for all $x \in [0,1]$. Introduce the kernel of the Haar system with indices k_0, m_0 by the formula

$$(5) \qquad K_{m_0}^{(k_0)}(x,t) = h_0^{(0)}(x)\, h_0^{(0)}(t) + \ldots + h_m^{(k)}(x)\, h_m^{(k)}(t) + \ldots + h_{m_0}^{(k_0)}(x)\, h_{m_0}^{(k_0)}(t)$$

for all $x,t \in [0,1]$. Expressing each term in (4) by means of (3) and then using the notation in (5) we obtain

$$(6) \qquad s_{m_0}^{(k_0)}(x) = \int_0^1 f(t)\, K_{m_0}^{(k_0)}(x,t)dt \qquad \text{for all } x \in [0,1].$$

It is easy to successively calculate the function values of $h_m^{(k)}(x)\ h_m^{(k)}(f)$, $K_{m_0}^{(k_0)}(t,x)$ and $s_{m_0}^{(k_0)}(x)$ for all $x,t \in [0,1]$ and all indices in question. For our purpose it will be sufficient to calculate the function values at the continuity points only.

As for the function values of the product $h_m^{(k)}(x)\ h_m^{(k)}(t)$ at its continuity points $x,t \in [0,1]$, we successively obtain the results given in Fig. 1. All the squares in the diagrams are taken as open, the discontinuity points form their boundaries, and the function values at these are not considered.

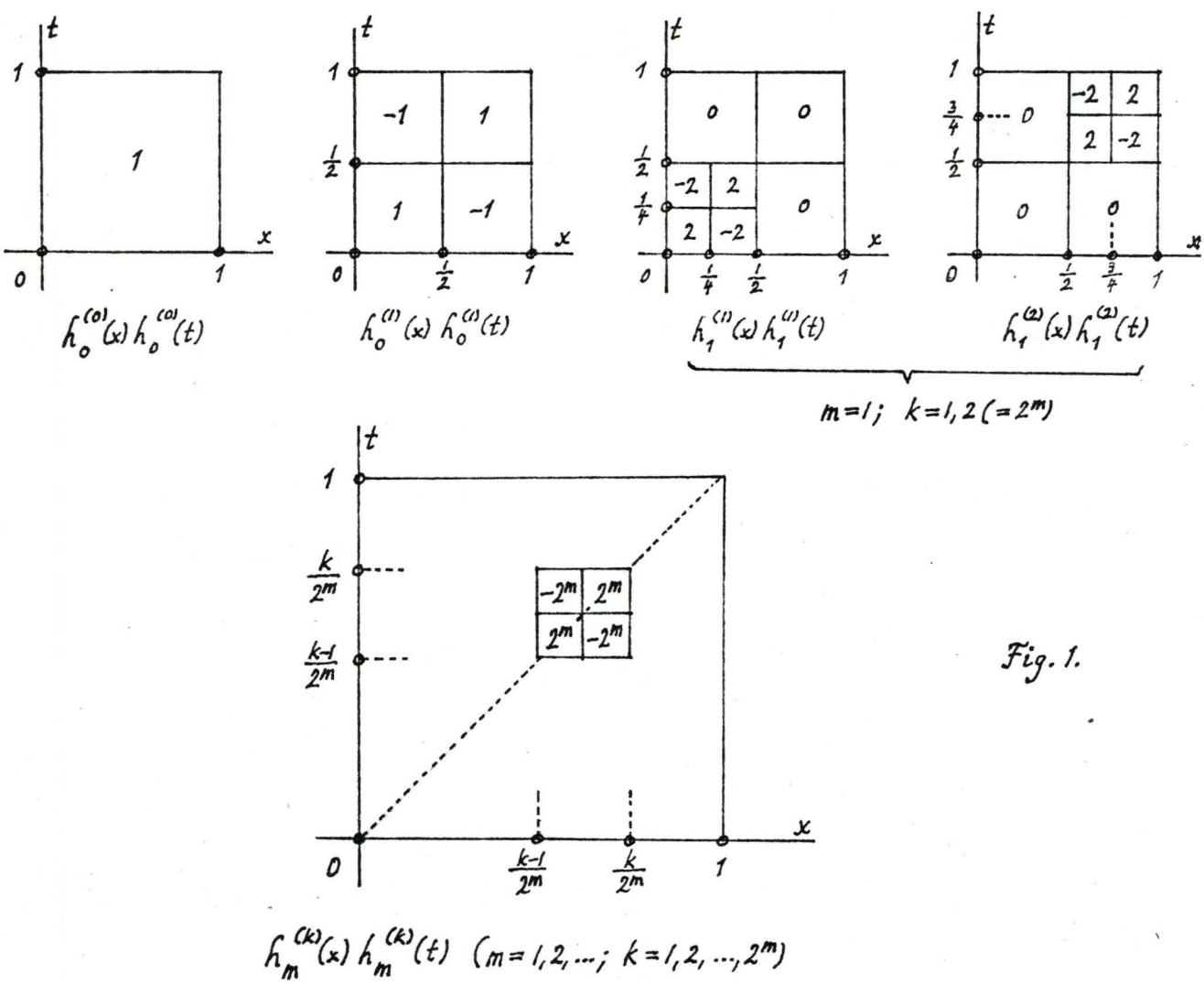

Fig. 1.

This and the formula (5) makes it possible for us to successively calculate the function values of the kernel $K_{m_0}^{(k_0)}$ at its continuity points $[x,t] \in [0,1] \times [0,1]$. Observe first that, by (5),

$$(7) \quad \begin{cases} [x,t] \in [0,1] \times [0,1] \text{ is a continuity point of } K_{m_0}^{(k_0)} \text{ if} \\ \text{and only if both } x,t \in [0,1] \text{ are continuity points of all} \\ h_0^{(0)},\ldots,h_m^{(k)},\ldots,h_{m_0}^{(k_0)} \text{ occuring on the right-hand side of (5).} \end{cases}$$

We succesively obtain the results in Fig. 2. Again, all squares in the diagrams are taken as open, the discontinuity points form their boundaries, and the function values at these are not considered.

Now we can calculate the function values of the partial sums of the Fourier expansion in (2) at their continuity points $x \in [0,1]$. Observe first that, by (4), $x \in [0,1]$ is a continuity point of $s_{m_0}^{(k_0)}$ if and only if $x \in [0,1]$ is a continuity point of all $h_0^{(0)},\ldots,h_m^{(k)},\ldots,h_{m_0}^{(k_0)}$ occuring on the right-hand side of (4). Since each of this finite number of Haar functions has only a finite number of discontinuities in $[0,1]$ and is constant between each two neighboring discontinuities or terminal points in $[0,1]$, it follows from (4) that also $s_{m_0}^{(k_0)}$ has only a finite number of discontinuity points in $[0,1]$, coinciding with the points at which at least one of the Haar functions $h_0^{(0)},\ldots,h_m^{(k)},\ldots,h_{m_0}^{(k_0)}$ is discontinuous, and is constant between each two neighboring discontinuities or terminal points in $[0,1]$.

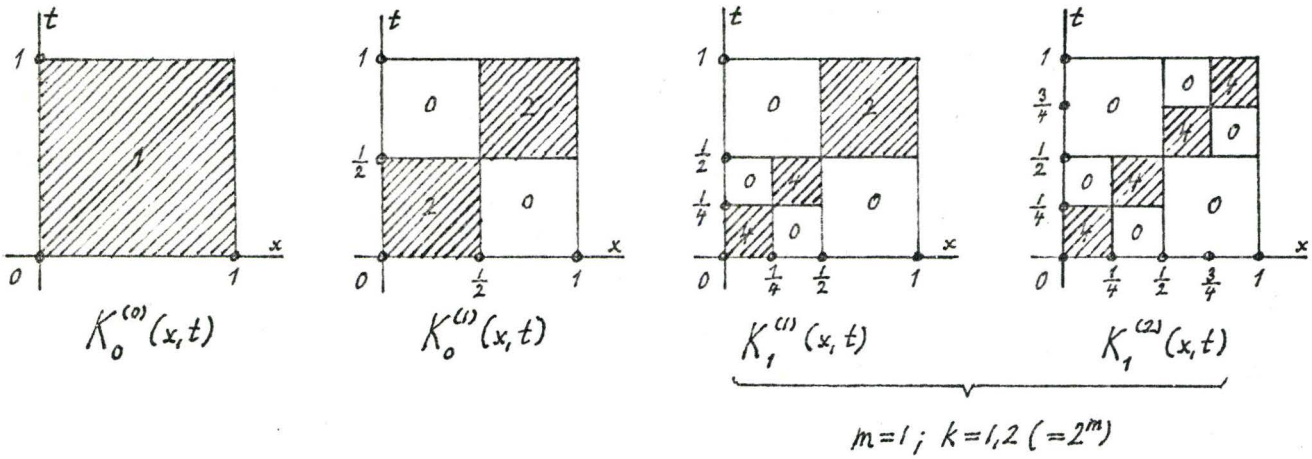

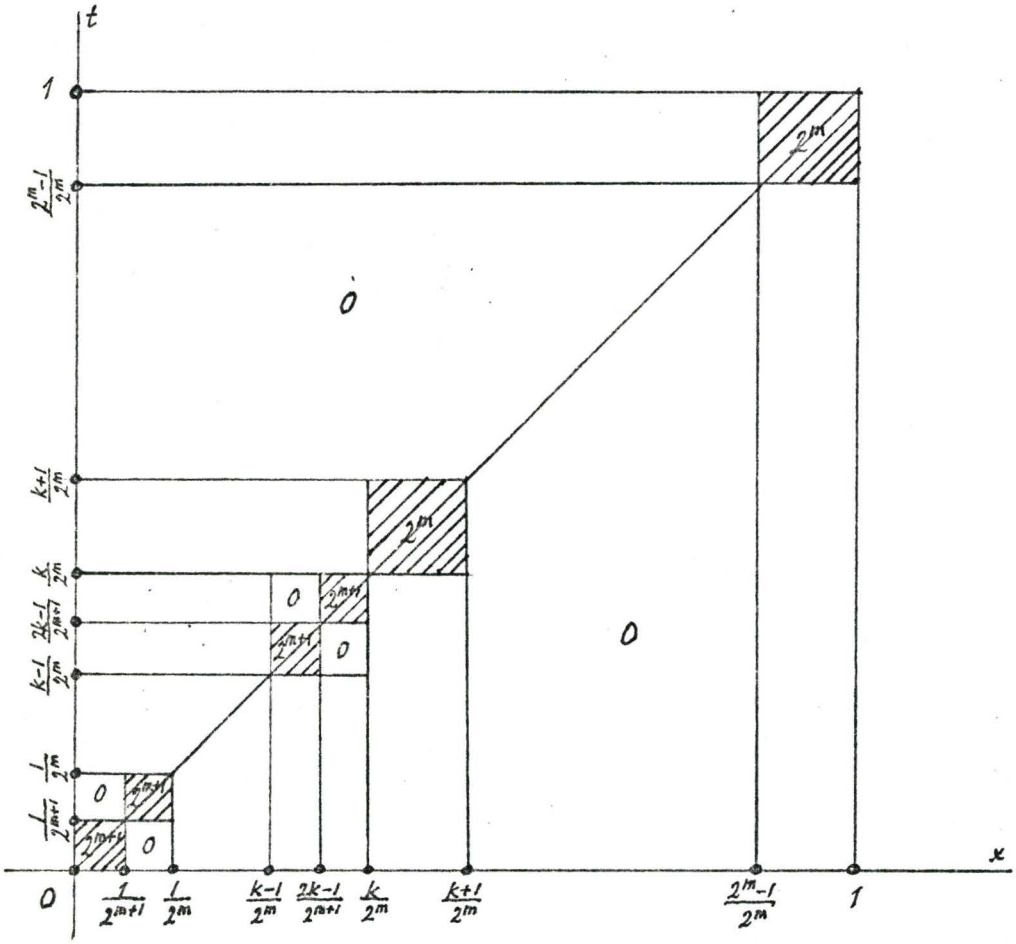

$K_m^{(k)}(x,t) \quad (m=1,2,\dots;\ k=1,2,\dots,2^m)$

Fig. 2.

Consequently

(10) $\begin{cases} s_{m_0}^{(k_0)} \text{ is a step function on } [0,1] \text{ whose discontinuity points} \\ \text{coincide with the points at which at least one of the Haar functions} \\ h_0^{(0)},\dots,h_m^{(k)},\dots,h_{m_0}^{(k_0)} \text{ is discontinuous.} \end{cases}$

Writing m,k instead of m_0,k_0 in (6) we obtain

(11) $$s_m^{(k)}(x) = \int_0^1 f(t)\, K_m^{(k)}(x,t)dt \qquad \text{for all } x \in [0,1]$$

and all appropriate indices k,m. Fix any $x \in [0,1]$ such that

(12) $$x \neq \frac{\ell}{2^n} \qquad \text{for all } \ell = 0,1,\dots,2^n;\ n = 1,2,\dots \ .$$

By (12) we have excluded a countable set of points of $0,1$, i.e. a set of the Lebesgue measure zero. Besides, among the points (12) we already have all the discontinuity points of all the Haar functions, and consequently, by (1)), all the discontinuity points of all the partial sums $s_m^{(k)}$ as well. By (11),(12) and 1., x lies in an open interval $(a_m^{(k)}, b_m^{(k)}) \subset [0,1]$ between two neighboring discontinuities of the Haar functions $h_0^{(0)},\dots,h_m^{(k)}$ or the terminal points of $[0,1]$ whose length is, by (1),

(13) $$b_m^{(k)} - a_m^{(k)} = \frac{1}{2^{m+1}} \quad \text{or} \quad \frac{1}{2^m} \ .$$

Next, by (7), (8) and (9), $K_m^{(k)}(x,t) = 2^{m+1}$ or 2^m respectively for all $t \in (a_m^{(k)}, b_m^{(k)})$, and $K_m^{(k)}(x,t) = 0$ for all $t \in [0,1] - [a_m^{(k)}, b_m^{(k)}]$. Therefore, by (13),

$$(14) \qquad K_m^{(k)}(x,t) = \begin{cases} \dfrac{1}{b_m^{(k)} - a_m^{(k)}} & \text{for all } t \in (a_m^{(k)}, b_m^{(k)}), \\ 0 & \text{for all } t \in [0,1] - [a_m^{(k)}, b_m^{(k)}]. \end{cases}$$

Applying (14) in (11) we obtain

$$s_m^{(k)}(x) = \frac{1}{b_m^{(k)} - a_m^{(k)}} \int_{a_m^{(k)}}^{b_m^{(k)}} f(t)dt.$$

Since, by construction, $a_m^{(k)}$ and $b_m^{(k)}$ are two discontinuities of the functions $h_0^{(0)},\ldots,h_m^{(k)}$ or the terminal points of $[0,1]$ closest to $x \in (a_m^{(k)}, b_m^{(k)})$, and since, by (10), $s_m^{(k)}$ is constant between them, the prece ding formula holds for all $x \in (a_m^{(k)}, b_m^{(k)})$. Hence

$$(15) \qquad \begin{cases} s_m^{(k)}(x) = \dfrac{1}{b_m^{(k)} - a_m^{(k)}} \displaystyle\int_{a_m^{(k)}}^{b_m^{(k)}} f(t)dt \qquad \text{for all } x \in (a_m^{(k)}, b_m^{(k)}), \\ \text{where } a_m^{(k)}, b_m^{(k)} \text{ are any two neighboring elements of the set} \\ \text{consisting of the terminal points of } [0,1] \text{ and all the discontinuity} \\ \text{point of the Haar functions } h_0^{(0)},\ldots,h_m^{(k)} \end{cases}$$

By 2), we may define the function

$$(16) \qquad F(y) = \int_0^y f(t)dt \qquad \text{for all } y \in [0,1] .$$

By (15) and (16),

$$(17) \qquad s_m^{(k)}(x) = \frac{F(b_m^{(k)}) - F(a_m^{(k)})}{b_m^{(k)} - a_m^{(k)}} .$$

If $m \to +\infty$ then, by construction and (13), $(a_m^{(k)}, b_m^{(k)})$ shrinks to x. Since, by (16) and 2), $F'(y) = f(y)$ for almost all $y \in [0,1]$, it follows from (17) that $\lim_{m \to +\infty} s_m^{(k)}(x) = F'(x) = f(x)$ for almost all $x \in [0,1]$ satisfying (12). Hence finally

$$(18) \qquad \lim_{m \to +\infty} s_m^{(k)}(x) = f(x) \qquad \text{for almost all } x \in [0,1] ,$$

which completes the proof of II.

III. Let $|f(t)| \leq A < +\infty$ for almost all $t \in [0,1]$. Then by (15),

$$|s_m^{(k)}(x)| \overset{(15)}{\leq} \frac{1}{b_m^{(k)} - a_m^{(k)}} \int_{a_m^{(k)}}^{b_m^{(k)}} |f(t)|dt \leq A$$

for all $x \in [0,1]$ satisfying (12), and all appropriate k,m, so that $|s_m^{(k)}(x)| \leq A$ for almost all $x \in [0,1]$, and all appropriate k,m which completes the proof of III.

5. Theorem. Let $h_0^{(0)}, h_m^{(k)}$ $(k = 1,2,\ldots,2^m;\ m = 0,1,\ldots)$ be the Haar system.

Then the following holds:

I. If $f \in L^2(0,1)$ and $c_m^{(k)}(f)$ are the Fourier coefficients of f with respect to $h_m^{(k)}$ for all k,m $(k = 1,2,\ldots,2^m;\ m = 0,1,\ldots)$, then

$$f = c_0^{(0)}(f)\, h_0^{(0)} + \ldots + \underbrace{c_m^{(1)}(f)\, h_m^{(1)} + \ldots + c_m^{(2^m)}(f)\, h_m^{(2^m)}}_{m = 0,1,\ldots} + \ldots$$

in the $L^2(0,1)$-norm.

II. With the assumption of I. the Parceval equality holds:

$$\|f\|^2_{L^2(0,1)} = |c_0^{(0)}(f)|^2 + \ldots + \underbrace{|c_m^{(1)}(f)|^2 + \ldots + |c_m^{(2^m)}(f)|^2}_{m = 0,1,\ldots} + \ldots$$

III. If $f,g \in L^2(0,1)$ and $c_m^{(k)}(f)$, $c_m^{(k)}(g)$ are the Fourier coefficients of f with respect to $h_m^{(k)}$ for all appropriate k,m then the Parceval equality holds:

$$\int_0^1 f(t)\,\overline{g(t)}dt = c_0^{(0)}(f)\,\overline{c_0^{(0)}(g)} + \ldots + \underbrace{c_m^{(1)}(f)\,\overline{c_m^{(1)}(g)} + \ldots + c_m^{(2^m)}(f)\,\overline{c_m^{(2^m)}(g)}}_{m = 0,1,\ldots} + \ldots$$

IV. <u>The Haar system is maximal</u> (see 1.25 and 3.9!)

V. <u>The Haar system is closed in the</u> $L^2(0,1)$-<u>norm</u> (see 1.27 and 3.12!).

<u>Proof</u>. Defining $(f,g) = \int_0^1 f(t)\,\overline{g(t)}\,dt$ for all $f,g \in L^2(0,1)$ it follows from 3.9 that $L^2(0,1)$ is a Hilbert space with the standard norm $\|f\|_{L^2(0,1)} = (f,f)^{\frac{1}{2}} = \left[\int_0^1 |f(t)|^2\,dt\right]^{\frac{1}{2}}$ for all $f \in L^2(0,1)$. Therefore, by 1.16, for each $f \in L^2(0,1)$ the Fourier coefficients $c_m^{(k)}(f)$ of f with respect to $h_m^{(k)}$ are defined by $c_m^{(k)}(f) = \frac{1}{\|h_m^{(k)}\|^2_{L^2(0,1)}}(f,h_m^{(k)})$

$$= \frac{1}{\|h_m^{(k)}\|^2_{L^2(0,1)}} \int_0^1 f(t)\,\overline{h_m^{(k)}(t)}\,dt \overset{3.,1.}{=} \int_0^1 f(t)\,h_m^{(k)}(t)\,dt \quad \text{for all}$$

appropriate k,m.

Now let $f \in L^2(0,1)$, so that, by 3.8, also $f \in L(0,1)$, and therefore, by II. in 4.,

$$(1) \qquad f(t) = c_0^{(0)}(f)\,h_0^{(0)}(t) + \ldots + \underbrace{c_m^{(1)}(f)\,h_m^{(1)}(t) + \ldots + c_m^{(2^m)}(f)\,h_m^{(2^m)}(t) + \ldots}_{m = 0,1,\ldots}$$

for a.a. $t \in [0,1]$.

Next let $(f,h_m^{(k)}) = 0$ for all k,m in question so that also $c_m^{(k)}(f) = 0$ for all k,m in question. Then, by (1), $f(t) = 0$ for a.a. $t \in [0,1]$. Consequently, by 1.25, the Haar system is maximal so that IV. holds. But then 2.4 implies I.- III. and V.

6. Remark. The Haar system has the remarkable property that the Fourier expansion of any continuous function F on $[0,1]$ in terms of the Haar system converges to $F(t)$ uniformly for all $t \in [0,1]$. We are not going to prove this here because the results in 4. will be sufficient for us in the sequel. On the other hand, however, we will need the theorem which follows.

7. Theorem. Suppose:

1) $h_0^{(0)}, h_m^{(k)}$ $(k = 1,2,\ldots,2^m;\ m = 0,1,\ldots)$ is the Haar system.

2) F is continuous on $[0,1]$.

3) $$c_0^{(0)} = [F(1) - F(0)]\, h_0^{(0)}(\tfrac{1}{2}),$$

$$c_m^{(k)} = \left[F\left(\frac{k-\frac{1}{2}}{2^m}\right) - F\left(\frac{k-1}{2^m}\right)\right] h_m^{(k)}\left(\frac{k-1}{2^m}+\right) +$$

$$+\left[F\left(\frac{k}{2^m}\right) - F\left(\frac{k-\frac{1}{2}}{2^m}\right)\right] h_m^{(k)}\left(\frac{k}{2^m}-\right)$$

for $k = 1,2,\ldots,2^m;\ m = 0,1,\ldots,$

where $h_m^{(k)}(t_0+)$ and $h_m^{(k)}(t_0-)$ denote the limits of $h_m^{(k)}$ from the right and left at t_0.

Then

$$(1)\qquad F(t) = F(0) + c_0^{(0)} \int_0^t h_0^{(0)}(u)du + \ldots + \underbrace{c_m^{(1)} \int_0^t h_m^{(1)}(u)du + \ldots + c_m^{(2^m)} \int_0^t h_m^{(2^m)}(u)du + \ldots}_{m = 0,1,\ldots}$$

uniformly for all $t \in [0,1]$.

Proof. Consider the so called Schauder system of functions defined as follows:

$$(2)\qquad \begin{cases} H_0^{(0)}(t) = t & \text{for all } t \in [0,1] \\ H_m^{(k)}(t) = \begin{cases} 2^{m+1}\left(t - \frac{k-1}{2^m}\right) & \text{for all } t \in \left[\frac{k-1}{2^m}, \frac{k-\frac{1}{2}}{2^m}\right] \\ -2^{m+1}\left(t - \frac{k}{2^m}\right) & \text{for all } t \in \left[\frac{k-\frac{1}{2}}{2^m}, \frac{k}{2^m}\right] \\ 0 & \text{for all } t \in \left[0, \frac{k-1}{2^m}\right] \cup \left[\frac{k}{2^m}, 1\right] \end{cases} & (k = 1,2,\ldots 2^m;\ m = 0,1,\ldots). \end{cases}$$

The function $H_m^{(k)}$ increases linearly from 0 to 1 on $\left[\frac{k-1}{2^m}, \frac{k-\frac{1}{2}}{2^m}\right]$, and decreases linearly from 1 to 0 on $\left[\frac{k-\frac{1}{2}}{2^m}, \frac{k}{2^m}\right]$ $(k = 1,2,\ldots,2^m;\ m = 0,1,\ldots)$.

Obviously all these functions are continuous on $[0,1]$. From 1. and (2) we obtain, after a short calculation, the relations

$$(3)\qquad \begin{cases} \int_0^t h_0^{(0)}(u)du = H_0^{(0)}(t) & \text{for all } t \in [0,1], \\ \int_0^t h_m^{(k)}(u)du = \dfrac{1}{2^{\frac{1}{2}m+1}} H_m^{(k)}(t) & \text{for all } t \in [0,1];\ k = 1,2,\ldots,2^m; \\ m = 0,1,\ldots\ . \end{cases}$$

Next consider the following sequence of functions:

$$
(4)\quad \begin{cases}
s_0^{(0)}(t) = F(0) + \left[F(1) - F(0)\right] \underbrace{h_0^{(0)}\left(\frac{1}{2}\right)}_{=1 \text{ by } 1.} H_0^{(0)}(t) \\
s_0^{(1)}(t) = s_0^{(0)}(t) + \left[F\left(\frac{1}{2}\right) - s_0^{(0)}\left(\frac{1}{2}\right)\right] H_0^{(1)}(t) \\
s_1^{(1)}(t) = s_0^{(1)}(t) + \left[F\left(\frac{1}{4}\right) - s_0^{(1)}\left(\frac{1}{4}\right)\right] H_1^{(1)}(t) \\
s_1^{(2)}(t) = s_1^{(1)}(t) + \left[F\left(\frac{3}{4}\right) - s_1^{(1)}\left(\frac{3}{4}\right)\right] H_1^{(2)}(t) \\
\cdots\cdots\cdots\cdots\cdots\cdots\cdots\cdots\cdots\cdots \\
s_m^{(k)}(t) = s_{m-1}^{(2^{m-1})}(t) + \left[F\left(\frac{k-\frac{1}{2}}{2^m}\right) - s_{m-1}^{(2^{m-1})}\left(\frac{k-\frac{1}{2}}{2^m}\right)\right] H_m^{(k)}(t)(k = 1;\ m = 1,2,\ldots) \\
s_m^{(k)}(t) = s_m^{(k-1)}(t) + \left[F\left(\frac{k-\frac{1}{2}}{2^m}\right) - s_m^{(k-1)}\left(\frac{k-\frac{1}{2}}{2^m}\right)\right] H_m^{(k)}(t)(k=2,3,\ldots,2^m;m=1,2,\ldots)
\end{cases}
$$

for all $t \in [0,1]$.

By (4), $s_0^{(0)}$ is a linear combination of $F(0)$ and $H_0^{(0)}$, and thus continuous on $[0,1]$. Continuing by induction it follows from (4) that

$$
(5)\quad \begin{cases}
s_m^{(k)} \text{ is a linear combination of } F(0),\ H_0^{(0)},\ H_0^{(1)},\ldots,H_m^{(k)}, \\
\text{and thus continuous on } [0,1] \text{ for all } k,m \text{ in question.}
\end{cases}
$$

By (4) and (2),

(6) $s_0^{(0)}$ is a linear function on $[0,1]$, and coincides with F at $t = 0,1$.

This and (4) imply that

(7) $s_0^{(1)}$ is a linear function on $\left[0, \frac{1}{2}\right], \left[\frac{1}{2}, 1\right]$, and coincides with F at $t = 0, \frac{1}{2}, 1$.

Continuing by induction it follows from (4), (6) and (7) that

$$(8)\quad \begin{cases} s_m^{(k)} \text{ is linear on } \left[0, \frac{\frac{1}{2}}{2^m}\right], \left[\frac{\frac{1}{2}}{2^m}, \frac{1}{2^m}\right], \ldots, \left[\frac{k-\frac{1}{2}}{2^m}, \frac{k}{2^m}\right], \left[\frac{k}{2^m}, \frac{k+1}{2^m}\right], \ldots \\ \ldots, \left[\frac{2^m-1}{2^m}, 1\right], \text{ and coincides with } F \text{ at } t = 0, \\ \frac{\frac{1}{2}}{2^m}, \frac{1}{2^m}, \ldots, \frac{k-\frac{1}{2}}{2^m}, \frac{k}{2^m}, \frac{k+1}{2^m}, \ldots, \frac{2^m-1}{2^m}, 1 \quad (k = 1,2,\ldots,2^m;\ m = 0,1,\ldots). \end{cases}$$

By (6), (7) and (8), the functions (4) form a sequence of succesive approximations of the function F on $[0,1]$.

We are going to calculate the coefficients of $H_m^{(k)}$ on the right-hand sides in (4). Since the points $\frac{1}{2}, \frac{1}{4}, \frac{3}{4}, \ldots, \frac{k-\frac{1}{2}}{2^m}$ are the centers of the intervals $[0,1], \left[0, \frac{1}{2}\right], \left[\frac{1}{2}, 1\right], \ldots, \left[\frac{k-1}{2^m}, \frac{k}{2^m}\right]$ on which, by (6), (7) and (8), the functions $s_0^{(0)}, s_0^{(1)}, s_1^{(1)}, \ldots, s_{m-1}^{(2^{m-1})}$ or $s_m^{(k-1)}$ are linear, the function values of these functions at these points are the arithmetic means of their values at the boundary points of these intervals. But, by (6), (7) and (8), at the boundary points of these intervals the function values of $s_0^{(0)}, s_0^{(1)}, s_1^{(1)}, \ldots$ coincide with the function values of F. So we obtain

$$F(\tfrac{1}{2})-s_0^{(0)}(\tfrac{1}{2}) \overset{(6)}{=} F(\tfrac{1}{2})-\frac{s_0^{(0)}(0)+s_0^{(0)}(1)}{2} \overset{(6)}{=} F(\tfrac{1}{2})-\frac{F(0)+F(1)}{2} =$$

$$= \frac{1}{2}\left[F(\tfrac{1}{2})-F(0)\right]-\frac{1}{2}\left[F(1)-F(\tfrac{1}{2})\right] \overset{1.}{=} \frac{1}{2}\Big\{\left[F(\tfrac{1}{2})-F(0)\right]\underbrace{h_1^{(0)}(0+)}_{=1 \text{ by } 1.}+\left[F(1)-F(\tfrac{1}{2})\right]\underbrace{h_1^{(0)}(1-}_{=-1 \text{ by } 1.}$$

$$\overset{3)}{=} \frac{1}{2}c_0^{(1)},$$

$$F\left(\frac{1-\frac{1}{2}}{2^m}\right)-s_{m-1}^{(2^{m-1})}\left(\frac{1-\frac{1}{2}}{2^m}\right) = F\left(\frac{\frac{1}{2}}{2^m}\right)-s_{m-1}^{(2^{m-1})}\left(\frac{1}{2^{m+1}}\right) \overset{(8)}{=}$$

$$\overset{(8)}{=} F\left(\frac{\frac{1}{2}}{2^m}\right)-\frac{s_{m-1}^{(2^{m-1})}(0)+s_{m-1}^{(2^{m-1})}(\frac{1}{2}m)}{2} \overset{(8)}{=} F\left(\frac{\frac{1}{2}}{2^m}\right)-\frac{F(0)+F(\frac{1}{2}m)}{2} =$$

$$= \frac{1}{2}\left[F\left(\frac{\frac{1}{2}}{2^m}\right)-F(0)\right]-\frac{1}{2}\left[F\left(\frac{1}{2^m}\right)-F\left(\frac{\frac{1}{2}}{2^m}\right)\right] =$$

$$= \frac{1}{2^{\frac{1}{2}m+1}}\Bigg\{\left[F\left(\frac{\frac{1}{2}}{2^m}\right)-f(0)\right]\underbrace{h_m^{(1)}(0+)}_{=-2^{\frac{1}{2}m} \text{ by } 1.}+\left[F\left(\frac{1}{2^m}\right)-F\left(\frac{\frac{1}{2}}{2^m}\right)\right]\underbrace{h_m^{(1)}\left(\frac{1}{2^m}-\right)}_{=-2^{\frac{1}{2}m} \text{ by } 1.}\Bigg\} \overset{3)}{=}$$

(9) $$\overset{3)}{=} \frac{1}{2^{\frac{1}{2}m+1}}\,c_m^{(1)} \qquad (m = 1,2,\ldots),$$

$$F\left(\frac{k-\frac{1}{2}}{2^m}\right)-s_m^{(k-1)}\left(\frac{k-\frac{1}{2}}{2^m}\right) \overset{(8)}{=} F\left(\frac{k-\frac{1}{2}}{2^m}\right)-\frac{s_m^{(k-1)}\left(\frac{k-1}{2^m}\right)+s_m\left(\frac{k}{2^m}\right)}{2} \overset{(8)}{=}$$

$$\overset{(8)}{=} F\left(\frac{k-\frac{1}{2}}{2^m}\right)-\frac{F\left(\frac{k-1}{2^m}\right)+F\left(\frac{k}{2^m}\right)}{2} =$$

$$(9)\quad \left\{\begin{aligned}
&= \frac{1}{2}\left[F\left(\frac{k-\frac{1}{2}}{2^m}\right) - F\left(\frac{k-1}{2^m}\right)\right] - \frac{1}{2}\left[F\left(\frac{k}{2^m}\right) - F\left(\frac{k-\frac{1}{2}}{2^m}\right)\right] = \\
&= \frac{1}{2^{\frac{1}{2}m+1}}\left[F\left(\frac{k-\frac{1}{2}}{2^m}\right) - F\left(\frac{k-1}{2^m}\right)\right] \underbrace{h_m^{(k)}\left(\frac{k-1}{2^m}+\right)}_{=2^{\frac{1}{2}m} \text{ by 1.}} + \left[F\left(\frac{k}{2^m}\right) - F\left(\frac{k-\frac{1}{2}}{2^m}\right)\right] \underbrace{h_m^{(k)}\left(\frac{k}{2^m}-\right)}_{=-2^{\frac{1}{2}m} \text{ by 1.}} \overset{3)}{=} \\
&\overset{3)}{=} \frac{1}{2^{\frac{1}{2}m+1}}\, c_m^{(k)} \qquad (k = 2,3,\dots,2^m;\ \ m = 1,2,\dots).
\end{aligned}\right.$$

It follows from (4) that the functions in (4) form the sequence of partial sums of an expansion in terms of $F(0)$, $H_0^{(0)}(t)$, $H_0^{(1)}(t)$, ... By (4) and (9), this expansion is of the form

$$(10)\quad \left\{\begin{aligned}
&F(0) + c_0^{(0)} H_0^{(0)}(t) + \dots + \underbrace{\frac{1}{2^{\frac{1}{2}m+1}}\, c_m^{(1)} H_m^{(1)}(t) + \dots + \frac{1}{2^{\frac{1}{2}m+1}}\, c_m^{(2^m)} H_m^{(2^m)}(t)}_{m = 0,1,\dots} + \dots \overset{3)}{=} \\
&\overset{3)}{=} F(0) + c_0^{(0)} \int_0^t h_0^{(0)}(u)\,du + \dots + \underbrace{c_m^{(1)} \int_0^t h_m^{(1)}(u)\,du + \dots + c_m^{(2^m)} \int_0^t h_m^{(2^m)}(u)\,du}_{m = 0,1,\dots} + \dots,
\end{aligned}\right.$$

i.e. of the form mentioned in (1). We shall now prove that the series (10) converges to $F(t)$ uniformly for all $t \in [0,1]$.

Fix any $\varepsilon \in (0,+\infty)$. By 2), F is continuous on $[0,1]$ and therefore also uniformly continuous on $[0,1]$. Consequently there exists $\delta \in (0,+\infty)$ such that

(11) $\quad |F(t_2) - F(t_1)| < \varepsilon$ for each $t_1, t_2 \in [0,1]$ with $|t_2 - t_1| < \delta$.

Next fix

(12) $\quad$ any $m = 1,2,\ldots$ such that $\frac{1}{2^{m-1}} < \delta$, and any $k = 1,2,\ldots, 2^m$.

Finally consider any $t_0 \in [0,1]$. Consequently m,k do not depend on t_0.

If $t_0 \in (0,1)$ it foolows from (8) that only two cases can occur:

(i) There exist a,b such that $0 \leq a < t_0 < b \leq 1$,

(13) $\quad b-a = \frac{1}{2^{m+1}}$ or $\frac{1}{2^m}$, i.e. $b-a < \frac{1}{2^{m-1}} \overset{(12)}{<} \delta$,

(14) $\quad s_m^{(k)}$ is linear in $[a,b]$, $s_m^{(k)}(t) = F(t)$ for $t = a,b$.

By (14), the graph of $s_m^{(k)}$ forms a chord of the graph of F for all $t \in [a,b]$. Since, by 2), F is continuous on $[a,b]$, the distance between the chord and the graph of F for all t a,b is at most equal to the oscillation of F on $[a,b]$. Hence

(15) $$\left| s_m^{(k)}(t_0) - F(t_0) \right| \overset{(5),2)}{\leq} \max_{a \leq t \leq b} \left| s_m^{(k)}(t) - F(t) \right| \leq \max_{t_1, t_2 \in [a,b]} |F(t_2) - F(t_1)| \overset{(13),(11}{<} \varepsilon .$$

(ii) There exist a, b such that $1 \leq a < t_0 < b \leq 1$.

(16) $$b-a \leq \frac{2}{2^m} = \frac{1}{2^{m-1}} \overset{(12)}{<} \delta ,$$

(17) $s_m^{(k)}$ is linear in $[a,t_0]$, $[t_0,b]$, $s_m^{(k)}(t) = F(t)$ for $t = a, t_0, b$.

By (17), the graph of $s_m^{(k)}$ consists of two chords of the graph of F for all $t \in [a,b]$, and the proof of (15) may be carried out similarly as in (i).

If $t_0 = 0$ or $t_0 = 1$, the proof of $|s_m^{(k)}(t_0) - F(t_0)| < \varepsilon$ is also similar.

Consequently $|s_m^{(k)}(t_0) - F(t_0)| < \varepsilon$ for all $t_0 \in [0,1]$, and all m,k satisfying (12), which completes the proof.

8. Remarks. The results in 1.-6 with the exception of III. in 4. are due to Haar and his pupils, and may be found in all standard books concerned with orthogonal systems. The result in 7., with the exception of the formulae in 3), is due to Schauder and may be found in all standard books concerned with functional analysis.

On the other hand, III. in 4., which is, of course, quite easy to prove, and the formulae 3) in 7., are new, and will be applied in the next two chapters. Instead of 3) in 7., some form of recurrence relations is usually given as in Kaczmarz, Steinhaus (11), Ch. II., theorem [2.4.3].

Some other properties of series in the Schauder system were investigated in a recent paper by Uljanov (33).

§ 25. The term-by-term integration of a Fourier expansion in terms of the Haar system

1. Theorem Suppose:

1) $h_0^{(0)}$, $h_m^{(k)}$ $(k = 1,2,\ldots,2^m;\ m = 0,1,\ldots)$ is the Haar system.

2) $f \in L(0,1)$.

3) $c_m^{(k)}(f)$ is the Fourier coefficient of f with respect to $h_m^{(k)}$ in the sense of 22.1 for all k,m $(k = 1,2,\ldots,2^m;\ m = 0,1,\ldots)$. (Cf. 24.4).

Then the following holds:

$$\text{I.}\quad \int_{x_0}^{x} f(t)dt = c_0^{(0)}(f)\int_{x_0}^{x} h_0^{(0)}(t)\,dt + \ldots$$

$$\ldots + \underbrace{c_m^{(1)}(f)\int_{x_0}^{x} h_m^{(1)}(t)dt + \ldots + c_m^{(2^m)}(f)\int_{x_0}^{x} h_m^{(2^m)}(t)dt + \ldots}_{m = 0,1,\ldots}$$

for all $x_0, x \in [0,1]$.

II. The series in I. converges uniformly for all $x_0, x \in [0,1]$.

III. <u>If</u> $f \in L^2(0,1)$ <u>the series in</u> I. <u>converges absolutely for all</u> $x_0, x \in [0,1]$.

<u>Proof.</u> I. By 24.3, the Haar system is orthonormal with respect to the weight function $w(t) = 1$ for all $t \in [0,1]$. By 2) and 24.4, the Fourier coefficients of f with respect to the Haar system in the sense of 22.1 exist. Without loss of generality we may suppose that $0 \leq x_0 < x \leq 1$. Then the function

$$\varphi_{x_0,x}(t) = \begin{cases} \dfrac{1}{w(t)} = 1 & \text{for all} \quad t \in [x_0,x], \\ 0 & \text{for all} \quad t \in [0,1] - [x_0,x], \end{cases}$$

is bounded on $[0,1]$. Hence $\varphi_{x_0,x} \in L(0,1)$ so that, by 24.4, the Fourier expansion of $\varphi_{x_0,x}$ in terms of the Haar system converges to $\varphi_{x_0,x}(t)$ for almost all $t \in [0,1]$. Since $\varphi_{x_0,x}$ is bounded on $[0,1]$, the partial sums of this expansion are, by 24.4 again, uniformly bounded for almost all $t \in [0,1]$. Thus all the assumptions of 23.3 are satisfied, and 23.3 implies the result.

II. Let

(1) $$F(t) = \int_0^t f(u)du \quad \text{for all} \quad t \in [0,1].$$

By 2) and (1),

(2) F is continuous on $[0,1]$,

(3) $$F(0) = 0.$$

Set

(4) $$\begin{cases} c_0^{(0)} = \left[F(t) - F(0) \right] h_0^{(0)}\left(\frac{1}{2}\right), \\ c_m^{(k)} = \left[F\left(\frac{k-\frac{1}{2}}{2^m}\right) - F\left(\frac{k-1}{2^m}\right)\right] h_m^{(k)}\left(\frac{k-1}{2^m}+\right) + \left[F\left(\frac{k}{2^m}\right) - F\left(\frac{k-\frac{1}{2}}{2^m}\right)\right] h_m^{(k)}\left(\frac{k}{2^m}-\right) \\ (k = 1,2,\ldots,2^m; \quad m = 0,1,\ldots). \end{cases}$$

By (2), (4) and 24.7,

(5) $$\begin{cases} F(t) = F(0) + c_0^{(0)} \int_0^t h_0^{(0)}(u)du + \ldots \\ \ldots + \overbrace{c_m^{(1)} \int_0^t h_m^{(1)}(u)du + \ldots + c_m^{(2^m)} \int_0^t h_m^{(2^m)}(u)du}^{m = 0,1,\ldots} + \ldots \\ \text{uniformly for all } t \in [0,1] \quad . \end{cases}$$

But by (4), (1), (3), 24.1 and 24.3,

(6) $$\begin{cases} c_0^{(0)} \overset{(4),(1),(3)}{=} \int_0^1 f(u)du\, h_0^{(0)}\left(\frac{1}{2}\right) \overset{24.1}{=} \int_0^1 f(u) \underbrace{h_0^{(0)}(u)}_{\text{const.}}du \overset{24.4}{=} c_0^{(0)}(f), \\ c_m^{(k)} \overset{(4),(1)}{=} \int_{\frac{k-1}{2^m}}^{\frac{k-\frac{1}{2}}{2^m}} f(u)du\, h_m^{(k)}\left(\frac{k-1}{2^m}+\right) + \int_{\frac{k-\frac{1}{2}}{2^m}}^{\frac{k}{2^m}} f(u)du\, h_m^{(k)}\left(\frac{k}{2^m}-\right) \overset{24.1}{=} \\ \overset{24.1}{=} \int_{\frac{k-1}{2^m}}^{\frac{k-\frac{1}{2}}{2^m}} f(u)\underbrace{h_m^{(k)}(u)}_{\text{const.}}du + \int_{\frac{k-\frac{1}{2}}{2^m}}^{\frac{k}{2^m}} f(u)\underbrace{h_m^{(k)}(u)}_{\text{const.}}du \overset{24.1}{=} \int_0^1 f(u)h_m^{(k)}(u)du \overset{24.4}{=} c_m^{(k)}(f) \\ (k = 1,2,\ldots,2^m; \quad m = 0,1,\ldots) \end{cases}$$

Setting (3) and (6) into (5) we obtain

$$(7)\quad \begin{cases} \displaystyle\int_0^t f(u)du = c_0^{(0)}(f) \int_0^t h_0^{(0)}(u)du + \dots \\ \displaystyle \dots + \overbrace{c_m^{(1)}(f) \int_0^t h_m^{(1)}(u)du + \dots + c_m^{(2^m)}(f) \int_0^t h_m^{(2^m)}(u)du}^{m=0,1,\dots} + \dots \\ \text{uniformly for all } t \in [0,1]. \end{cases}$$

Choosing succesively $t = x_0, x$ in (7), and subtracting the two formulae, we obtain the result.

III. By 24.5, the Haar system is closed in the $L^2(0,1)$-norm so that, if $f \in L^2(0,1)$, the result follows from 15.3.

<u>2. Remark</u>. The results in 1. are new.

Using a different approach, Liverani recently proved in (27) that I. and II. in 1. hold if $f \in L^2(0,1)$. This assumption is stronger than ours. Moreover, Liverani did not mention that the integrated Fourier expansion of $f \in L^2(0,1)$ in terms of the Haar system is not only uniformly but also absolutely convergent.

§ 26. The term-by-term Laplace transformation of a Fourier expansion in terms of the Haar system

1. Theorem. Suppose:

1) $h_0^{(0)}$, $h_m^{(k)}$ $(k = 1,2,\dots,2^m;\ m = 0,1,\dots)$ is the Haar system.

2) $\tilde{h}_0^{(0)}$, $\tilde{h}_m^{(k)}$ $(k = 1,2,\dots,2^m;\ m = 0,1,\dots)$ are periodic extensions of the Haar functions from $[0,1]$ into $[0,+\infty)$ with period 1.

3) $f \in L^2(0,1)$ with period 1.

4) $c_m^{(k)}(f)$ is the Fourier coefficient of f with respect to $h_m^{(k)}$ (see 1.16 and 3.9!) for all k,m $(k = 1,2,\dots,2^m;\ m = 0,1,\dots)$.

Then the following holds:

I.
$$\int_0^{+\infty} f(t)e^{-zt}dt = c_0^{(0)}(f)\int_0^{+\infty} \tilde{h}_0^{(0)}(t)e^{-zt}dt + \dots$$

$$\dots + \underbrace{c_m^{(1)}(f)\int_0^{+\infty} \tilde{h}_m^{(1)}(t)e^{-zt}dt + \dots + c_m^{(2^m)}(f)\int_0^{+\infty} \tilde{h}_m^{(2^m)}(t)e^{-zt}dt}_{m = 0,1,\dots} + \dots$$

for $\operatorname{Re} z \in (0,+\infty)$.

II. <u>If</u> $\delta \in (0,+\infty)$ <u>the series on the right-hand side of</u> I. <u>converges absolutely and uniformly for all</u> z <u>with</u> $\operatorname{Re} z \in [\delta,+\infty)$.

<u>Proof</u>. By 24.3, the Haar system is orthonormal on $(0,1)$ with respect to the weight function $w(t) = 1$ for all $t \in [0,1]$. By 24.5, the Haar system is complete in the $L^2(0,1)$-norm. If we replace each Haar function by its periodic extension from $[0,1]$ into $[0,+\infty)$ with period 1 we change its original values at the boundary points of $[0,1]$ at most so that all the above properties are preserved and also the Fourier coefficients remain unchanged. Everything then follows from 18.2.

<u>2. Theorem</u>. <u>Suppose</u>:

1) $h_0^{(0)}, h_m^{(k)}$ $(k = 1,2,\dots,2^m;\ m = 0,1,\dots)$ <u>is the Haar system</u>.

2) $\tilde{h}_0^{(0)}, \tilde{h}_m^{(k)}$ $(k = 1,2,\dots,2^m;\ m = 0,1,\dots)$ <u>are periodic extensions of the Haar functions from</u> $[0,1]$ <u>into</u> $[0,+\infty)$ <u>with period</u> 1.

3) $f \in L(0,1)$ <u>with period</u> 1.

4) $c_m^{(k)}(f)$ <u>is the Fourier coefficient of</u> f <u>with respect to</u> $h_m^{(k)}$ (see 24.4!) <u>for all appropriate</u> k,m.

<u>Then</u> I. <u>in</u> 1. <u>remains true</u>.

<u>Proof</u>. By 24.3, the Haar system is orthonormal on $(0,1)$ with respect to the weight function $w(t) = 1$ for all $t \in [0,1]$. Let $\operatorname{Re} z \in (0,+\infty)$. Then the function

$$\varphi(t) = e^{-zt} \quad \text{for all} \quad t \in [0,1]$$

is bounded on $[0,1]$. Therefore $\varphi \in L(0,1)$ so that, by 24.4, φ has

finite Fourier coefficients with respect to the Haar system. By 24.4, the Fourier expansion of $\varphi(t)$ with respect to the Haar system converges to $\varphi(t)$ for a.a. $t \in [0,1]$, and its partial sums are uniformly bounded for a.a. $t \in [0,1]$. Thus all the assumptions of 23.3 are satisfied (taking a sufficiently large positive constant for h), and our formula follows from 23.3.

3. Remark. The results in this chapter are new.

§27. The Phragmén-Lindelöff and Hausdorff-Young theorems

1. Lemma. Suppose:

1) $-\infty < \alpha < \beta < +\infty$.

2) S is the set of complex numbers z such that $\alpha < \operatorname{Re} z < \beta$, $-\infty < \operatorname{Im} z < +\infty$.

3) f is continuous on $\overline{S}$.

4) $|f(x + iy)| \leq K < +\infty$ for $x = \alpha$ or β, and all $y \in (-\infty, +\infty)$.

5) $\lim_{y \to \pm\infty} |f(x + iy)| = 0$ uniformly for all $x \in [\alpha, \beta]$.

6) f is holomorphic on S.

Then $|f(z)| \leq K$ for all $z \in \overline{S}$.

Proof. By 4), it is sufficient to prove that $|f(z)| \leq K$ for all $z \in S$.

Fix any $z_0 = x_0 + iy_0 \in S$. By 5), there exists η such that $|y_0| < \eta < +\infty$ and

(1) $$|f(x \pm i\eta)| \leq K \quad \text{for all} \quad x \in [\alpha, \beta].$$

By 4) and (1), $|f(z)| \leq K$ for all z lying on the boundary of the rectangle $\alpha \leq x \leq \beta$, $-\eta \leq y \leq \eta$, whose interior contains z_0, so that, by 3), 6) and the maximum modulus principle, also $|f(z_0)| \leq K$.

2. Lemma: Suppose:

1) $-\infty < \alpha < \beta < +\infty$.

2) $S = \{ z = \text{complex};\ \alpha < \operatorname{Re} z < \beta,\ -\infty < \operatorname{Im} z < +\infty \}$.

3) f is bounded and continuous on $\overline{S}$.

4) $|f(x+iy)| \leq K$ for $x = \alpha$ or β, and all $y \in (-\infty, +\infty)$.

5) f is holomorphic for all $z \in S$.

Then $|f(z)| \leq K$ for all $z \in \overline{S}$.

Proof. Consider the functions

$$(1) \qquad f_n(z) = f(z)\, e^{\frac{z^2}{n}} = f(x+iy)\, e^{\frac{x^2-y^2}{n}}\, e^{\frac{2xy}{n} i} \quad \text{for all } z = x+iy \in \overline{S},$$

$$n = 1, 2, \ldots .$$

By 3) and 5), each f_n is continuous on $\overline{S}$ and holomorphic on S. Setting $\gamma = \max(|\alpha|, |\beta|)$ we have $x^2 - y^2 \leq x^2 \leq \gamma^2$ for all $x \in [\alpha, \beta]$, $y \in (-\infty, +\infty)$, so that by (1) and 4),

$$(2) \qquad |f_n(x+iy)| \overset{(1)}{=} |f(x+iy)|\, e^{\frac{x^2-y^2}{n}} \overset{4)}{\leq} K\, e^{\frac{\gamma^2}{n}} \quad \text{for } x = \alpha \text{ or } \beta, \text{ and}$$

$$\text{all } y \in (-\infty, +\infty).$$

By 3), $|f(x+iy)| \leq M < +\infty$ for all $x + iy \in \overline{S}$ so that, by (1),

$$|f_n(x+iy)| \overset{(1)}{\leq} |f(x+iy)|\, e^{\frac{x^2-y^2}{n}} \leq M\, e^{\frac{\gamma^2}{n}}\, e^{-\frac{y^2}{n}} \quad \text{for all}$$

$$x \in [\alpha, \beta],\quad y \in (-\infty, +\infty).$$

Hence

(3) $$\lim_{y \to \pm\infty} |f_n(x+iy)| = 0 \quad \text{uniformly for all} \quad x \in [\alpha,\beta] \quad (n = 1,2,\ldots).$$

By (1), (2), (3) and 1.,

(4) $$|f_n(z)| \leq K e^{\frac{z^2}{n}} \quad \text{for all} \quad z \in \overline{S} \quad (n = 1,2,\ldots).$$

Finally, by (1) and (4),

$$|f(z)| = \lim_{n \to +\infty} |f(z)\, e^{\frac{z^2}{n}}| \overset{(1)}{=} \lim_{n \to +\infty} |f_n(z)| \overset{(4)}{\leq} K$$

for all $z \in \overline{S}$.

3. The Phragmén-Lindelöf theorem. Suppose:

1) $-\infty < \alpha < \beta < +\infty$.

2) $S = \{ z = \text{complex;} \ \alpha < \operatorname{Re} z < \beta, \ -\infty < \operatorname{Im} z < +\infty \}$.

3) f is bounded and continuous on $\overline{S}$.

4) $|f(\alpha+iy)| \leq K_1$, $|f(\beta+iy)| \leq K_2$ for all $y \in (-\infty,+\infty)$.

where $K_1, K_2 \geq 0$.

5) f is holomorphic on S.

6) L is a linear polynomial such that $L(\alpha) = 1$, $L(\beta) = 0$.

Then $|f(x+iy)| \leq K_1^{L(x)} K_2^{1-L(x)}$ for all $x \in [\alpha,\beta]$, $y \in (-\infty,+\infty)$.

Proof. Let us first assume $K_1, K_2 > 0$. Consider the function

(1) $$f_1(z) = \frac{f(z)}{K_1^{L(z)} K_2^{1-L(z)}} \quad \text{for all} \quad z \in \overline{S}.$$

By 3), 5) and 6), f_1 is continuous on $\overline{S}$ and holomorphic on S. Next, by (1) and 6),

$$|f_1(z)| \overset{(1)}{=} \frac{|f(z)|}{\left|\left(\frac{K_1}{K_2}\right)^{L(z)} K_2\right|} = \frac{|f(z)|}{K_2\left|e^{L(z)\log\frac{K_1}{K_2}}\right|} \overset{6)}{=} \frac{|f(z)|}{K_2\, e^{\frac{z-\alpha}{\alpha-\beta}\log\frac{K_1}{K_2}}} = \frac{|f(x+iy)|}{K_2\, e^{\frac{x-\beta}{\alpha-\beta}\log\frac{K_1}{K_2}}}$$

$$\text{for all } x \in [\alpha,\beta], \quad y \in (-\infty,+\infty),$$

so that, by 3) f_1 is bounded on $\overline{S}$. Besides, by (1), 6) and 4),

$$\left.\begin{aligned} |f_1(\alpha+iy)| &\overset{(1)}{=} \frac{|f(\alpha+iy)|}{K_1^{L(\alpha)}K_2^{1-L(\alpha)}} \overset{6)}{=} \frac{|f(\alpha+iy)|}{K_1} \overset{4)}{\leq} 1 \\ |f_1(\beta+iy)| &\overset{(1)}{=} \frac{|f(\beta+iy)|}{K_1^{L(\beta)}K_2^{1-L(\beta)}} \overset{6)}{=} \frac{|f(\beta+iy)|}{K_2} \overset{4)}{\leq} 1 \end{aligned}\right\} \text{ for all } y \in (-\infty,+\infty)$$

so that f_1 satisfies all the assumptions of 1. with $K = 1$. Consequently, by 1.,

$$(2) \qquad |f_1(z)| \leq 1 \qquad \text{for all } z \in \overline{S}.$$

From (2), (1) and 6) the above inequality easily follows.

If $K_1 = 0$ or $K_2 = 0$ then the inequalities 4) and thus also the resulting inequality are satisfied with any $M_1 > K_1 = 0$ or $M_2 > K_2 = 0$ instead of K_1 or K_2. Supposeing $x \in (\alpha,\beta)$ so that, by 6), $0 < L(x) < 1$, and letting $M_1 \to K_1 = 0+$ or $M_2 \to K_2 = 0+$, we obtain $|f(x+iy)| \leq K_1^{L(x)}K_2^{1-L(x)}$ for all $x \in (\alpha,\beta)$, $y \in (-\infty,+\infty)$. Since, by 3) and 6), both sides are continuous for all $x \in [\alpha,\beta]$, $y \in (-\infty,+\infty)$, the

above inequality for $x = \alpha$ or $x = \beta$ then follows by letting $x \to \alpha+$ or $x \to \beta-$.

4. The first Hausdorff-Young theorem. Suppose:

1) $-\infty < a < b < +\infty$.

2) $1 < p < 2$; $\frac{1}{p} + \frac{1}{q} = 1$.

3) $|y_k(t)| \leq M < +\infty$ for all $t \in [a,b]$, $k = 1,2,\ldots$.

4) $y_1, y_2, \ldots$ is an orthonormal system on $[a,b]$ with respect to the weight-function $w(t) = 1$ for all $t \in [a,b]$.

5) $f \in L^p(a,b)$.

Then the following holds:

I. The Fourier coefficients of f with respect to $y_1, y_2, \ldots$ in the sense of 22.1, i.e.

$$c_k(f) = \int_a^b f(t)\,\overline{y_k(t)}\,dt \quad (k = 1,2,\ldots). \tag{1}$$

are finite.

II. $$\left[\sum_{k=1}^{+\infty} |c_k(f)|^q\right]^{\frac{1}{q}} \leq M^{\frac{2}{p}-1}\left[\int_a^b |f(t)|^p\,dt\right]^{\frac{1}{p}}.$$

Proof. I. By (1), the Hölder inequality, 3) and 5),

$$|c_k(f)| \overset{(1)}{\leq} \int_a^b |f(t)|\,|y_k(t)|\,dt \overset{\text{Hölder}}{\leq} \left[\int_a^b |f(t)|^p\,dt\right]^{\frac{1}{p}}\left[\int_a^b |y_k(t)|^q\,dt\right]^{\frac{1}{q}} \overset{3)}{\leq}$$

$$\overset{3)}{\leq} \|f\|_p\, M\,(b-a)^{\frac{1}{q}} \overset{5)}{<} +\infty \qquad \text{for all } k = 1,2,\ldots$$

II. In the sequel it will be useful to introduce the notation

$$\| c(f) \|_q = \left[\sum_{k=1}^{+\infty} | c_k(f) |^q \right]^{\frac{1}{q}}$$

if the right hand side is finite. This occurs at least in the case when the orthogonal system $y_1, y_2, \ldots$ is finite.

If $M = 0$ then, by 3), $y_k(t) = 0$ for all $t \in [a,b]$, $k = 1,2,\ldots$, so that $1 \overset{4)}{=} \| y_k \|_p = 0$ for $k = 1,2,\ldots$, which is a contradiction. Hence

(2) $$M \in (0,+\infty).$$

First we shall prove that it is sufficient to verify the inequality in II. under the following additional assumptions:

(a) The system $y_1, y_2, \ldots$ consists of a finite number n of functions $(n = 1,2,\ldots)$.

(b) f is a simple function (see 4.3!).

For, by 5) and 4.4, given any $\varepsilon \in (0,+\infty)$ there exists a simple function f^* such that

(3) $$\| f-f^* \|_p < \frac{1}{M^{\frac{2}{p}-1} + M^{1-\frac{2}{p}} n} \varepsilon .$$

Hence

(4) $$\| f^* \|_p \leq \| f \|_p + \| f-f^* \|_p \overset{(3)}{<} \| f \|_p + \frac{1}{M^{\frac{2}{p}-1} + M^{1-\frac{2}{p}} n} \varepsilon .$$

If $c_k(f^*)$ are the Fourier coefficients of f^* with respect to y_k it follows from (1), the Holder inequality, (3), 3) and 4) that

$$|c_k(f)-c_k(f^*)| \overset{(1)}{\leq} \int_a^b |f(t)-f^*(t)|\,|\overline{y_k(t)}|\,dt \overset{\text{Hölder}}{\leq} \|f-f^*\|_p \left[\int_a^b |y_k(t)|^q dt\right]^{\frac{1}{q}} \overset{(3)}{<}$$

$$\overset{(3)}{<} \frac{\varepsilon}{M^{\frac{2}{p}-1}+M^{1-\frac{2}{p}}n} \left[\int_a^b |y_k(t)|^{q-2}|y_k(t)|^2 dt\right]^{\frac{1}{q}} \overset{3)}{\leq} \frac{M^{\frac{q-2}{q}}\varepsilon}{M^{\frac{2}{p}-1}+M^{1-\frac{2}{q}}n} \underbrace{\left[\int_a^b |y_k(t)|^2 dt\right]^{\frac{1}{q}}}_{=1 \text{ by } 4)} \overset{4)}{=}$$

$$= \frac{M^{1-\frac{2}{q}}}{M^{\frac{2}{p}-1}+M^{1-\frac{2}{q}}n}\,\varepsilon \qquad (k = 1,2,\ldots).$$

If, by (a), the system $y_1, y_2, \ldots$ consists of n functions only $(n = 0,1,\ldots)$ then, by 5)

$$(6) \quad \|c(f)-c(f^*)\|_q = \left[\sum_{k=1}^{n} |c_k(f)-c_k(f^*)|^q\right]^{\frac{1}{q}} \overset{(5)}{<} \frac{M^{1-\frac{2}{q}}n}{M^{\frac{2}{p}-1}+M^{1-\frac{2}{p}}n}\,\varepsilon$$

If, by (b), the inequality in II. is satisfied for a simple function f^* then, by (4),

$$(7) \quad \|c(f^*)\|_q \overset{\text{II.}}{\leq} M^{\frac{2}{p}-1}\|f^*\|_p \overset{(4)}{<} M^{\frac{2}{p}-1}\|f\|_p + \frac{M^{1-\frac{2}{q}}}{M^{\frac{2}{p}-1}+M^{1-\frac{2}{q}}n}$$

By (6) and (7),

$$\| c(f) \|_q \leq \| c(f)-c(f^*) \|_q + \| c(f^*) \|_q < M^{\frac{2}{p}-1} \| f \|_p + \frac{M^{\frac{2}{p}-1} + M^{1-\frac{2}{q}} n}{M^{\frac{2}{p}-1} + M^{1-\frac{2}{q}} n} \varepsilon =$$

$$= M^{\frac{2}{p}-1} \| f \|_p + \varepsilon$$

or in short

$$\| c(f) \|_q < M^{\frac{2}{p}-1} \| f \|_p + \varepsilon \tag{8}$$

Since $\varepsilon \in (0,+\infty)$ may be arbitrarily small, we obtain by $\varepsilon \to 0+$

$$\left[\sum_{k=1}^{n} |c_k(f)|^q \right]^{\frac{1}{q}} = \| c_k(f) \|_q \leq M^{\frac{2}{p}-1} \| f \|_p. \tag{9}$$

If the system $y_1, y_2, \ldots$ is infinite then considering that the left-hand side of (9) is a non-decreasing function of n we obtain by letting $n \to +\infty$ in (9)

$$\left[\sum_{k=1}^{+\infty} |c_k(f)|^q \right]^{\frac{1}{q}} \leq M^{\frac{2}{p}-1} \| f \|_p,$$

which is the inequality in II. This proves our auxiliary claim.

Next we are going to prove that, in addition to (a) and (b), we may also suppose that

$$\| f \|_p = 1. \tag{c}$$

For if $\|f\|_p = 0$ then $f(t) = 0$ for a.a. $t \in [0,2\pi]$ so that, by (1), $c_k(f) = 0$ for all $k = 1,2,\ldots,n$, whence by (a), the inequality II. follows (and reduces to an equality). If $\|f\|_p \neq 0$ then $\left\| \frac{f}{\|f\|_p} \right\|_p = 1$ so that assuming II. to be correct for $\frac{f}{\|f\|_p}$ instead of f, i.e. assuming that $\frac{1}{\|f\|_p} \left[\sum_{k=1}^{n} |c_k(f)|^q \right]^{\frac{1}{q}} \overset{\text{II.}}{\leq} M^{\frac{2}{p}-1} \left[\int_a^b \left| \frac{f(t)}{\|f\|_p} \right|^p dt \right]^{\frac{1}{p}} =$

$= M^{\frac{2}{p}-1} \frac{\|f\|_p}{\|f\|_p} = M^{\frac{2}{p}-1}$, we again obtain $\left[\sum_{k=1}^{n} |c_k(f)|^p \right]^{\frac{1}{p}} \leq M^{\frac{2}{p}-1} \|f\|_p$,

which, in view of (a), proves our auxiliary claim.

Consequently the only requirment now is to prove the inequality II. under the additional assumptions (a),(b) and (c).

Fix any $n = 1,2,\ldots$. If $\|c(f)\|_q = \left[\sum_{k=1}^{n} |c_k(f)|^q \right]^{\frac{1}{q}} = 0$ then the inequality II. under the assumptions (a), (b) and (c) is true. Consequently we may suppose that

$$\|c(f)\|_q = \left[\sum_{k=1}^{n} |c_k(f)|^q \right]^{\frac{1}{q}} > 0,$$

and set

$$d_k(f) = \frac{|c_k(f)|^{q-1} e^{-i \arg c_k(f)}}{\|c(f)\|_q^{q-1}} \qquad (k = 0,1,\ldots,n). \tag{10}$$

Then, by (10) and 2),

$$(11)\qquad \sum_{k=1}^{n} c_k(f)\, d_k(f) = \sum_{k=1}^{n} |c_k(f)|\, e^{i \arg c_k(f)}\, d_k(f) \overset{(10)}{=}$$

$$\overset{(10)}{=} \frac{1}{\|c(f)\|_q^{q-1}} \sum_{k=1}^{n} |c_k(f)|^q = \frac{\|c(f)\|_q^q}{\|c(f)\|_q^{q-1}} = \|c(f)\|_q,$$

$$(12)\qquad \|d(f)\|_p^p = \sum_{k=1}^{n} |d_k(f)|^p = \frac{1}{\|c(f)\|_q^{p(q-1)}} \sum_{k=1}^{n} |c_k(f)|^{p(q-1)} \overset{2)}{=}$$

$$\overset{2)}{=} \frac{1}{\|c(f)\|_q^q} \sum_{k=1}^{n} |c_k(f)|^q = \frac{\|c(f)\|_q^q}{\|c(f)\|_q^q} = 1.$$

Expressing $d_k(f)$ in polar form we obtain

$$(13)\qquad d_k(f) = D_k^{\frac{1}{p}}(f)\ \varepsilon_k(f), \quad \text{where } D_k(f) \geq 0, \quad |\varepsilon_k(f)| = 1.$$

Then, by (10) and 2), $D_k(f) = |d_k(f)|^p \overset{(10)}{=} \dfrac{|c_k(f)|^{p(q-1)}}{\|c(f)\|_q^{p(q-1)}} \overset{2)}{=} \dfrac{|c_k(f)|^q}{\|c(f)\|_q^q}$

so that

$$(14)\qquad \sum_{k=1}^{n} D_k(f) = \frac{1}{\|c(f)\|_q^q} \sum_{k=1}^{n} |c_k(f)|^q = \frac{\|c(f)\|_q^q}{\|c(f)\|_q^q} = 1.$$

Expressing $f(t)$ in polar form we obtain

(15) $$f(t) = F^{\frac{1}{p}}(t)\ \eta(t), \quad \text{where} \quad F(t) \geq 0, \quad |\eta(t)| = 1,$$

so that, by (c),

(16) $$\int_a^b f(t)dt = \int_a^b |f(t)|^p dt = \|f\|_p^p \overset{(c)}{=} 1.$$

By (1) and (15), the Fourier coefficients $c_k(f)$ of f with respect to y_k are

(17) $$c_k(f) \overset{(1)}{=} \int_a^b f(t)\ \overline{y_k(t)}dt \overset{(15)}{=} \int_a^b F^{\frac{1}{p}}(t)\ \eta(t)\ \overline{y_k(t)}dt.$$

In addition, by (11), (13) and (17),

(18) $$\|c(f)\|_q \overset{(11)}{=} \sum_{k=1}^n c_k(f)\ d_k(f) \overset{(13),(17)}{=} \sum_{k=1}^n D_k^{\frac{1}{p}}(f)\ \varepsilon_k(f) \int_a^b F^{\frac{1}{p}}(t)\ \eta(t)\ \overline{y_k(t)}dt.$$

Write z instead of $\frac{1}{p}$ in the last formula and consider the function

(19) $$\Phi(z) = \sum_{k=1}^n D_k^z(f)\ \varepsilon_k(f) \int_a^b F^z(t)\ \eta(t)\ y_k(t)dt$$

of the complex variable z. Since, by (15), $F(t) = |f(t)|^p$, where, by (b), $|f(t)|$ is a simple function, it follows from 4.3 that each integral on the right-hand side of (19) is a linear combination of the expressions Λ_α^z for positive Λ_α and, at the same time, the coefficients of this linear combination do not depend on z. But then, by (13), $\Phi(z)$ is also a linear combination of this kind, and consequently it is bounded in any strip $\alpha < \operatorname{Re} z < \beta$ in the z-plane with $-\infty < \alpha < \beta < +\infty$.

We shall estimate the upper bound of $\Phi(z)$ on the vertical straight lines $z = \frac{1}{2} + iy$ and $z = 1 + iy$ $(-\infty < y < +\infty)$ respectively. In the latter case it follows from (19), (13), (15), 3), (16) and (14) that

$$|\Phi(1+iy)| \overset{(19)}{\leq} \sum_{k=1}^{n} D_k(f) \underbrace{|\varepsilon_k(f)|}_{\substack{=1 \\ \text{by (13)}}} \int_a^b F(t) \underbrace{|\eta(t)|}_{\substack{=1 \\ \text{by (15)}}} \underbrace{|y_k(t)|}_{\substack{\leq M \\ \text{by 3)}}} dt \leq M \sum_{k=1}^{n} D_k(f) \underbrace{\int_a^b F(t)dt}_{=1 \text{ by (16)}} \overset{(14)}{=} M$$

In the former case it follows from (19), (13), the Hölder inequality for sums and (14) that

$$|\Phi(\tfrac{1}{2}+iy)| \overset{(19)}{\leq} \sum_{k=1}^{n} |D_k^{\frac{1}{2}+iy}(f)| \underbrace{|\varepsilon_k(f)|}_{=1 \text{ by (13)}} \left| \int_a^b F^{\frac{1}{2}+iy}(t)\, \eta(t)\, \overline{y_k(t)}dt \right| \overset{(13)}{=}$$

$$= \sum_{k=1}^{n} D_k^{\frac{1}{2}}(f) \left| \int_a^b F^{\frac{1}{2}+iy}(t)\, \eta(t) \overline{y_k(t)}dt \right| \overset{\text{Hölder}}{\leq} \underbrace{\left(\sum_{k=1}^{n} D_k\right)^{\frac{1}{2}}}_{=1 \text{ by (14)}} \left[\sum_{k=1}^{n} \left| \int_a^b F^{\frac{1}{2}+iy}(t)\eta(t)\overline{y_k(t)}dt \right|^2 \right]^{\frac{1}{2}} =$$

$$= \left[\sum_{k=1}^{n} \left| \int_a^b F^{\frac{1}{2}+iy}(t)\, \eta(t)\, \overline{y_k(t)}dt \right|^2 \right]^{\frac{1}{2}} .$$

Since the integrals on the right-hand side are the Fourier coefficients of the function $F^{\frac{1}{2}+iy}(t)\, \eta(t)$ in the sense of 22.1 it follows from the Bessel inequality 1.22, (15) and (16) that

$$|\Phi(\tfrac{1}{2}+iy)| \overset{\text{Bessel 1.22}}{\leq} \| F^{\frac{1}{2}+iy}(t)\, \eta(t) \|_2^2 = \left[\int_a^b |F^{\frac{1}{2}+iy}(t)\, \eta(t)|^2 dt \right]^{\frac{1}{2}} \overset{(15)}{=}$$

$$\overset{(15)}{=} \left[\int_a^b F(t)dt \right]^{\frac{1}{2}} \overset{(16)}{=} 1.$$

To sum up we have

(20) $$|\Phi(\tfrac{1}{2}+iy)| \leq 1, \quad |\Phi(1+iy)| \leq M \quad \text{for all} \quad y \in (-\infty,+\infty).$$

Now we may apply the Phragmén-Lindelöf theorem 3. to the function Φ in the strip $\frac{1}{2} < x < 1$, $-\infty < y < +\infty$. Since $L(z) = 2(1-z)$ is the linear polynomial such that $L(\frac{1}{2}) = 1$, $L(1) = 0$, and $1-L(z) = 2z-1$, we obtain, in view of (20), the estimate

(21) $$|\Phi(x+iy)| \leq M^{2x-1} \qquad \text{for all} \quad \tfrac{1}{2} \leq x \leq 1, \quad -\infty < y < +\infty.$$

By (18) and (19), $\|c(f)\|_q = \Phi(\frac{1}{p})$ so that $\Phi(\frac{1}{p}) \geq 0$. Since, by 2), $1 < p < 2$ we have $\frac{1}{2} < \frac{1}{p} < 1$. Consequently, by (21) and (c),

$$\|c(f)\|_q = \Phi(\tfrac{1}{p}) = |\Phi(\tfrac{1}{p})| \overset{(21)}{\leq} M^{\frac{1}{p}-1} < M^{\frac{2}{p}-1} \overset{(c)}{=} M^{\frac{2}{p}-1} \|f\|_p,$$

which completes the proof.

<u>5. The second Hausdorff-Young theorem</u>. <u>Suppose</u>:

1) $-\infty < a < b < +\infty$.

2) $1 < p < 2$; $\frac{1}{p} + \frac{1}{q} = 1$. (Hence $2 < q < +\infty$).

3) $|y_k(t)| \leq M < +\infty$ <u>for all</u> $t \in [a,b]$, $k = 1,2,\ldots$.

4) $y_1, y_2, \ldots$ <u>is orthonormal system on</u> $[a,b]$ <u>with respect to the weight function</u> $w(t) = 1$ <u>for all</u> $t \in [a,b]$.

5) $c_1, c_2, \ldots$ <u>are complex numbers such that</u> $\sum_{k=1}^{+\infty} |c_k|^p < +\infty$.

<u>Then the following holds</u>:

I. <u>There exists a function</u> $f \in L^q(a,b)$ <u>such that its Fourier coefficients with respect to</u> y_k <u>in the sense of</u> 22.1 <u>are</u> c_k, <u>i.e.</u>

$$c_k = c_k(f) = \int_a^b f(t)\,\overline{y_k(t)}\,dt \qquad (k = 1,2,\ldots).$$

II. $$\left[\int_a^b |f(t)|^q dt\right]^{\frac{1}{q}} \leq M^{\frac{2}{p}-1} \left[\sum_{k=1}^{+\infty} |c_k|^p\right]^{\frac{1}{p}} .$$

<u>Proof</u>. Fix any $n = 1,2,\ldots,$ and set

(1) $$f_n(t) = \sum_{k=0}^{n} c_k\, y_k(t) \quad \text{for all} \quad t \in [a,b].$$

By 3) and 4), f_n are bounded and measurable on $[a,b]$ so that $f_n \in L^q(a,b)$. Next set

(2) $$g_n(t) = \frac{|f_n(t)|^{q-1} e^{i \arg f_n(t)}}{\|f_n\|_q^{q-1}} \quad \text{for all} \quad t \in [a,b].$$

Then

$$\int_a^b \overline{f_n(t)}\, g_n(t)\,dt = \frac{1}{\|f_n\|_q^{q-1}} \int_a^b \overline{f_n(t)}\, |f_n(t)|^{q-1} e^{i \arg f_n(t)}\,dt =$$

(3) $$= \frac{1}{\|f_n\|_q^{q-1}} \int_a^b |f_n(t)|^q\,dt = \frac{\|f_n\|_q^q}{\|f_n\|_q^{q-1}} = \|f_n\|_q ,$$

$$\|g_n\|_p^p = \int_a^b |g_n(t)|^p dt \overset{(2)}{=} \frac{1}{\|f_n\|_q^{p(q-1)}} \int_a^b f_n(t)^{p(q-1)} dt \overset{2)}{=}$$

(4)

$$= \frac{1}{\|f_n\|_q^q} \int_a^b |f_n(t)|^q dt = \frac{\|f_n\|_q^q}{\|f_n\|_q^q} = 1.$$

By (4) and the first Hausdorff-Young theorem, the Fourier coefficients of g_n with respect to y_k in the sense of 22.1, i.e.

(5) $$c_k(g_n) = \int_a^b g_n(t)\,\overline{y_k(t)}\,dt \quad (k = 1,2,\ldots),$$

are finite, and

(6) $$\left[\sum_{k=0}^{+\infty} |c_k(g_n)|^q\right]^{\frac{1}{q}} \leq M^{\frac{2}{p}-1} \|g_n\|_p.$$

By (3), (1) and (5),

(7) $$\|f_n\|_q \overset{(3)}{=} \int_a^b \overline{f_n(t)}\, g_n(t)dt \overset{(1)}{=} \sum_{k=1}^n \overline{c_k} \int_a^b g_n(t)\,\overline{y_n(t)}dt = \sum_{k=1}^n \overline{c_k}\, c_k(g_n)$$

so that $\sum_{k=1}^n \overline{c_k}\, c_k(g_n) \geq 0$. This, (7), the Hölder inequality for sums, (6) and (4) imply

$$(8)\quad \begin{cases} \|f_n\|_q \overset{(7)}{=} \underbrace{\sum_{k=1}^{n} \bar{c}_k\, c_k(g_n)}_{\geq 0} = \left|\sum_{k=1}^{n} \bar{c}_k\, c_k(g_n)\right| \leq \sum_{k=1}^{n} |\bar{c}_k\, c_k(g_n)| \overset{\text{Hölder}}{\leq} \\[2ex] \overset{\text{Hölder}}{\leq} \left[\sum_{k=1}^{n} |\bar{c}_k|^p\right]^{\frac{1}{p}} \left[\sum_{k=1}^{n} |c_k(g_n)|^q\right]^{\frac{1}{q}} = \left[\sum_{k=1}^{n} |c_k|^p\right]^{\frac{1}{p}} \left[\sum_{k=1}^{+\infty} |c_k(g_n)|^q\right]^{\frac{1}{q}} \leq \\[2ex] \overset{(6)}{\leq} \left[\sum_{k=1}^{n} |c_k|^p\right]^{\frac{1}{p}} M^{\frac{2}{p}-1} \|g_n\|_p \overset{(4)}{=} M^{\frac{2}{p}-1} \left[\sum_{k=1}^{n} |c_k|^p\right]^{\frac{1}{p}} . \end{cases}$$

Next fixing any $m = 1,2,\ldots$ such that $m < n$, and considering $f_n(t) - f_m(t) \overset{(1)}{=} \sum_{k=m+1}^{n} c_k\, y_k(t)$ instead of $f_n(t)$ we obtain in a quite analogous manner

$$(9)\qquad \|f_n - f_m\|_q \leq M^{\frac{2}{p}-1} \left[\sum_{k=m+1}^{n} |c_k|^p\right]^{\frac{1}{p}} \qquad \text{for } n > m.$$

But (9), 5) and the Bolzano-Cauchy test imply that $f_1, f_2, \ldots$ is a Cauchy sequence in $L^q(a,b)$. Since, by 3.9, $L^q(a,b)$ is complete there exists $f \in L^q(a,b)$ such that

$$(10)\qquad \lim_{n \to +\infty} \|f_n - f\|_q = 0.$$

Since $\big|\, \|f_n\|_q - \|f\|_q \,\big| \leq \|f_n - f\|_q$ for all $n = 1,2,\ldots$ it follows that also $\lim_{n \to +\infty} \|f_n\|_q = \|f\|_q$. Consequently letting $n \to +\infty$ in (8), and applying 5), we obtain

$$\| f \|_q \leq M^{\frac{2}{p}-1} \left[\sum_{k=1}^{+\infty} |c_k|^p \right]^{\frac{1}{p}} ,$$

which completes the proof of II.

To complete the proof of I. it is sufficient to show that c_k is equal to the Fourier coefficient $c_k(f)$ of f with respect to y_k in the sense of 22.1, i.e. to

$$(11) \qquad c_k(f) = \int_a^b f(t)\, \overline{y_k(t)}dt \quad (k = 1,2,\ldots).$$

Fix any $k = 1,2,\ldots,$ and then any $n = 1,2,\ldots$ such that $k \leq n$. By (1) and 4),

$$(12) \qquad \int_a^b f_n(t)\, \overline{y_k(t)}dt \overset{(1)}{=} \sum_{h=0}^{n} c_h \int_a^b y_h(t)\, \overline{y_k(t)}dt \overset{4)}{=} c_k.$$

By (12), (11), the Hölder inequality and 3),

$$|c_k - c_k(f)| \overset{(12),(11)}{=} \left| \int_a^b f_n(t)\, \overline{y_k(t)}dt - \int_a^b f(t)\, \overline{y_k(t)}dt \right| \leq \int_a^b |f_n(t)-f(t)|\,|y_k(t)|dt$$

$$\overset{\text{Hölder}}{\leq} \| f_n - f \|_q \, \| y_k \|_p = \| f_n - f \|_q \left[\int_a^b |y_k(t)|^p dt \right]^{\frac{1}{p}} \overset{3)}{\leq} \| f_n - f \|_q \, M(b-a)^{\frac{1}{p}}.$$

Since the left-hand side is independent on n while, by (10), the right-hand side tends to zero as $n \to +\infty$ we obtain by letting $n \to +\infty$

$$c_k = c_k(f) = \int_a^b f(t)\, \overline{y_k(t)}dt \qquad (k = 1,2,\ldots),$$

which completes the proof of I.

§ 28. Some special properties of the usual Fourier series

1. Theorem. Suppose:

1) f is a real function on $(-\infty,+\infty)$ with period 2π.

2) f is of bounded variation V on $[0,2\pi]$.

3) $$\left.\begin{aligned} a_n &= \frac{1}{\pi}\int_0^{2\pi} f(t)\cos nt\,dt \\ b_n &= \frac{1}{\pi}\int_0^{2\pi} f(t)\cos nt\,dt \end{aligned}\right\} \text{ for } n = 1,2,\ldots .$$

(By 2), f is bounded on $[0,2\pi]$ so that, by 3), all a_n, b_n are finite).

Then $|a_n|, |b_n| \leq \frac{V}{2n}$ for $n = 1,2,\ldots$.

Proof. Fix any $n = 1,2,\ldots$. By 1) and 2),

$$(1) \qquad \sum_{k=1}^{2n} \left| f(t+k\tfrac{\pi}{n}) - f\left[t+(k-1)\tfrac{\pi}{n}\right]\right| \leq V \quad \text{for all } t \in [0,2\pi].$$

Next, by 3) and 1),

$$\frac{1}{2}(a_n - i\,b_n) \overset{3)}{=} \frac{1}{2\pi}\int_0^{2\pi} f(t)e^{-int}dt = \left| \begin{array}{l} t = u+k\frac{\pi}{n} \\ dt = du \end{array} \quad \begin{array}{c|c} t & u \\ \hline 0 & -k\frac{\pi}{n} \\ 2\pi & 2\pi-k\frac{\pi}{n} \end{array} \right|$$

$$= \frac{1}{2\pi}\int_{-k\frac{\pi}{n}}^{2\pi-k\frac{\pi}{n}} f(u+k\tfrac{\pi}{n})e^{-in(u+k\frac{\pi}{n})}du = \frac{(-1)^k}{2\pi}\int_{-k\frac{\pi}{n}}^{2\pi-k\frac{\pi}{n}} f(u+k\tfrac{\pi}{n})e^{-inu}du =$$

$$= \frac{(-1)^k}{2\pi}\left[\int_{-k\frac{\pi}{n}}^{0} f(u+k\tfrac{\pi}{n})e^{-inu}du + \int_0^{2\pi-k\frac{\pi}{n}} f(u+k\tfrac{\pi}{n})e^{-inu}du\right] \overset{1)}{=}$$

(2)

$$u = t-2\pi \qquad \begin{array}{c|c} u & t \\ \hline -k\frac{\pi}{n} & 2\pi-k\frac{\pi}{n} \\ 0 & 2\pi \end{array} \qquad u = t$$

$$du = dt$$

$$\overset{1)}{=} \frac{(-1)^k}{2\pi}\left[\int_{2\pi-k\frac{\pi}{n}}^{2\pi} f(t+k\tfrac{\pi}{n})e^{-int}dt + \int_0^{2\pi-k\frac{\pi}{n}} f(t+k\tfrac{\pi}{n})e^{-int}dt\right] =$$

$$= \frac{(-1)^k}{2\pi}\int_0^{2\pi} f(t+k\tfrac{\pi}{n})e^{-int}dt \qquad \text{for} \qquad k = 1,2,\ldots,2n.$$

Similarly, by 3) and 1), but starting with the substitution $t = u+(k-1)\frac{\pi}{n}$ instead of $t = u+k\frac{\pi}{n}$, we obtain

$$(3) \quad \frac{1}{2}(a_n - i\,b_n) = \frac{(-1)^{k-1}}{2\pi}\int_0^{2\pi} f\left[t+(k-1)\tfrac{\pi}{n}\right]e^{-int}dt \qquad \text{for} \qquad k = 1,2,\ldots,2n.$$

Summing (2) and (3),

$$(4) \qquad a_n - i\, b_n = \frac{(-1)^k}{2\pi} \int_0^{2\pi} \left\{ f(t+k\,\tfrac{\pi}{n}) - f\left[t+(k-1)\,\tfrac{\pi}{n}\right] \right\} e^{-int}\, dt \quad \text{for} \quad k = 1,2,\ldots,2n.$$

Hence follows

$$(5) \qquad \left.\begin{array}{l} |a_n| = \sqrt{a_n^2} \\ |b_n| = \sqrt{b_n^2} \end{array}\right\} \leq \sqrt{a_n^2 + b_n^2} = |a_n - i\, b_n| \overset{(4)}{\leq} \frac{1}{2\pi} \int_0^{2\pi} \left| f(t+k\,\tfrac{\pi}{n}) - f\left[t+(k-1)\,\tfrac{\pi}{2}\right] \right| dt$$

$$\text{for} \quad k = 1,2,\ldots,2n.$$

Summing the formulae (5) for $k = 1,2,\ldots,2n$, and applying (1), we obtain

$$\left.\begin{array}{l} 2n\,|a_n| \\ 2n\,|b_n| \end{array}\right\} \overset{(5)}{\leq} \frac{1}{2\pi} \int_0^{2\pi} \sum_{k=1}^{2n} \left| f(t+k\,\tfrac{\pi}{n}) - f\left[t+(k-1)\,\tfrac{\pi}{n}\right] \right| dt \overset{(1)}{\leq} \frac{1}{2\pi}\, V\, 2\pi = V,$$

whence our inequalities follow.

<u>2. Theorem</u>. <u>Suppose</u>:

1) $c_0, c_1, \ldots$ <u>are complex numbers</u>.

2) $s_n = \sum_{k=0}^{n} c_k$ <u>for</u> $n = 0,1,\ldots$.

3) $\sigma_n = \frac{1}{n+1} \sum_{k=0}^{n} s_k$ <u>for</u> $n = 0,1,\ldots$.

<u>Then</u> $s_n - \sigma_n = \frac{1}{n+1} \sum_{k=0}^{n} k\, c_k$ <u>for</u> $n = 0,1,\ldots$.

Proof. The formula is obviously correct for $n = 0$. Fix any $n = 1,2,\ldots$. Then

$$s_n - \sigma_n \overset{3)}{=} s_n - \frac{s_0+s_1+\ldots+s_n}{n+1} = \frac{(n+1)s_n - (s_0+s_1+\ldots+s_n)}{n+1} = \frac{1}{n+1}\sum_{k=0}^{n}(s_n-s_k) =$$

$$= \frac{1}{n+1}\sum_{k=0}^{n-1}(s_n-s_k) \overset{2)}{=} \frac{1}{n+1}\sum_{k=0}^{n-1}(c_{k+1}+c_{k+2}+\ldots+c_n) = \frac{1}{n+1}(c_1+2c_2+\ldots+n\,c_n) =$$

$$= \frac{1}{n+1}\sum_{k=0}^{n} k\,c_k.$$

3. Theorem. Suppose:

1) f is a real function on $(-\infty,+\infty)$ with period 2π, and $f \in L(0,2\pi)$.

2) $$a_0 = \frac{1}{2\pi}\int_0^{2\pi} f(t)dt,\quad \left.\begin{aligned} a_k &= \frac{1}{\pi}\int_0^{2\pi} f(t)\cos kt\,dt \\ b_k &= \frac{1}{\pi}\int_0^{2\pi} f(t)\sin kt\,dt \end{aligned}\right\}\ \text{for } k = 1,2,\ldots .$$

3) $$s_0(f;\,t) = a_0 \qquad \text{for all } t \in (-\infty,+\infty),$$
$$s_n(f;\,t) = a_0 + \sum_{k=1}^{n}(a_k\cos kt + b_k\sin kt) \quad \text{for all } t \in (-\infty,+\infty),$$
$$n = 1,2,\ldots .$$

4) $$\sigma_n(f;\,t) = \frac{1}{n+1}\sum_{k=0}^{n} s_k(f;\,t) \quad \text{for all } t \in (-\infty,+\infty),\ n = 0,1,\ldots .$$

5) $$K_n(t) = \frac{1}{2(n+1)}\left[\frac{\sin\frac{(n+1)t}{2}}{\sin\frac{t}{2}}\right]^2 \quad \text{for all } t \neq 2k\pi\ (k = 0,\pm 1,\ldots),$$
$$n = 0,1,\ldots .$$

Then the following holds:

I. $\sigma_n(f;\ t) = \frac{1}{\pi} \int_0^{2\pi} f(t+u)\ K_n(u)du$ for all $t \in (-\infty,+\infty)$ $n = 0,1,\ldots$

II. $\frac{1}{\pi} \int_0^{2\pi} K_n(u)du = 1$ for $n = 0,1,\ldots$.

Proof May be found in textbooks dealing with the usual Fourier series and their summability by the method of arithmetic means. The functions σ_n and K_n are the well-known Fejér partial sums and Fejér kernels respectively.

4. Theorem. Suppose:

1) f is a real function on $(-\infty,+\infty)$ with period 2π and finite variation V on $[0,2\pi]$.

2) $m \leq f(t) \leq M$ for all $t \in (-\infty,+\infty)$. (By 1), m,M are finite).

3) a_0, a_k, b_k $(k = 1,2,\ldots)$ and $s_n(f;\ t)$ $(t \in (-\infty,+\infty),\ n = 0,1,\ldots)$ as in 3.

Then the following holds:

I. $$f(t) = a_0 + \sum_{k=1}^{+\infty} (a_k \cos kt + b_k \sin kt)$$

at each continuity point $t \in (-\infty,+\infty)$ of f, i.e., by 1), for almost all $t \in (-\infty,+\infty)$.

II. $m-V \leq s_n(f;\ t) \leq M + V$ for all $t \in (-\infty,+\infty)$, $n = 0,1,\ldots$.

Proof. I. Immediately follows from 1), 3) and the well-known Jordan test for the usual Fourier series.

II. By 1), 2) and 3),

$$m-V \overset{1)}{\leq} m \overset{2)}{\leq} \underbrace{\frac{1}{2\pi}\int_0^{2\pi} f(t)dt}_{= a_0 = s_0(f;t) \text{ for all } t \text{ by } 3)} \overset{2)}{\leq} M \overset{1)}{\leq} M+V,$$

which proves the formula for $n = 0$.

Next fix any $n = 1,2,\ldots,$ and define $\sigma_n(f;\, t)$ and $K_n(t)$ as in 3. By 5) in 3.,

(1) $\qquad K_n(t) \geq 0 \quad$ for almost all $\quad t \in (-\infty,+\infty)$.

By III. in 3., 2) and (1),

$$m \overset{\text{II. in 3.}}{=} m\frac{1}{\pi}\int_0^{2\pi} K_n(u)du \overset{2),(1)}{\leq} \frac{1}{\pi}\int_0^{2\pi} f(t+u)\, K_n(u)du \overset{2),(1)}{\leq} M\frac{1}{\pi}\int_0^{2\pi} K_n(u)du \overset{\text{II. in 3.}}{=} M$$

for all $t \in (-\infty,+\infty)$,

so that, by I. in 3.,

(2) $\qquad m \leq \sigma_n(f;\, t) \leq M \quad$ for all $\quad t \in (-\infty,+\infty)$.

By 3), 4) in 3., and 2.,

(3) $$s_n(f;t) - \sigma_n(f;t) = \frac{1}{n+1} \sum_{k=1}^{n} k(a_k \cos kt + b_k \sin kt)$$

for all $t \in (-\infty,+\infty)$.

By 1) and 1.,

(4) $$|a_k| , |b_k| \leq \frac{V}{2k} \qquad \text{for} \quad k = 1,2,\ldots \ .$$

Consequently,

$$|s_n(f;t) - \sigma_n(f;t)| \overset{(3)}{\leq} \frac{1}{n+1} \sum_{k=1}^{n} k(|a_k| + |b_k|) \overset{(4)}{\leq} \frac{1}{n+1} \sum_{k=1}^{n} V =$$

$$= \frac{n}{n+1} V < V \qquad \text{for all} \quad t \in (-\infty,+\infty).$$

Finally, by (2) and (5),

$$m-V \overset{(2)}{\leq} \sigma_n(f;t)-V \overset{(5)}{\leq} s_n(f;t) \overset{(5)}{\leq} \sigma_n(f;t)+V \overset{(2)}{\leq} M+V \text{ for all } t \in (-\infty,+\infty)$$

which completes the proof for $n = 1,2,\ldots$.

<u>5. Theorem</u>. <u>Suppose</u>:

1) $f \in L(0,2\pi)$.

2) a_0, a_k, b_k $(k = 1,2,\ldots)$ <u>are the usual Fourier coefficients of</u> f <u>so that</u> $f(t) \sim a_0 + \sum_{k=1}^{+\infty} (a_k \cos kt + b_k \sin kt)$.

3) g <u>is of bounded variation on</u> $[0,2\pi]$.

Then

$$\int_{x_0}^{x} f(t)\, g(t)dt = a_0 \int_{x_0}^{x} g(t)dt + \sum_{k=1}^{+\infty} \left[a_k \int_{x_0}^{x} g(t) \cos kt\, dt + b_k \int_{x_0}^{x} g(t) \sin kt\, dt \right].$$

for all $x_0, x \in [0,2\pi]$.

Proof. It is easy to check that the functions

(1) $\quad 1, \cos t, \sin t, \cos 2t, \sin 2t, \ldots$

form an orthogonaly system on $(0,2\pi)$ with respect to the weight function

$$w(t) = 1 \quad \text{for all} \quad t \in (0,2\pi),$$

and

$$\|1\|^2_{L^2(0,2\pi)} = 2\pi, \quad \|\cos kt\|^2_{L^2(0,2\pi)} = \pi, \quad \|\sin kt\|^2_{L^2(0,2\pi)} = \pi \quad (k = 1,2,\ldots)$$

so that, by 2), the numbers a_0, a_k, b_k $(k = 1,2,\ldots)$ in 3) are the Fourier coefficients of f with respect to (1) in the sense of 22.1.

We may suppose that both f,g are real since otherwise we would carry out the proof for the four combinations of their real and inaginary parts separately and sum the results.

Next we may suppose that

(2) $\quad f(0) = f(2\pi) = g(0) = g(2\pi) = 0$

since this may always be achieved by changing the function values of f,g at the terminal points $0,2\pi$ which preserves the assumptions 1) and 3), and also the values of the Fourier coefficients of f. We can assume that the functions f and g are extended periodically to $(-\infty,+\infty)$ with period 2π.

Finally, we may obviously suppose that $0 \leq x_0 < x \leq 2\pi$.

Define the function $g_{x_0,x}$ by

$$(3) \qquad g_{x_0,x}(t) = \begin{cases} g(t) & \text{for all} \quad t \in [x_0,x], \\ 0 & \text{for all} \quad t \in [0,x_0) \cup (x,2\pi]. \end{cases}$$

By 3) and (3), $g_{x_0,x}$ is again of bounded variation on $[0,2\pi]$. By (2) and (3), $g_{x_0,x}$ is of period 2π. Therefore, by 4., the Fourier expansion of $g_{x_0,x}$ with respect to (1) converges to $g_{x_0,x}(t)$ for almost all $t \in (0,2\pi)$, and its partial sums are uniformly bounded for all $t \in (0,2\pi)$. Consequently all the assumptions of 23.1 are satisfied if we choose a sufficiently large constant for h so that, by (2) and 23.1,

$$\int_{x_0}^{x} f(t)\, g(t)dt \overset{(3)}{=} \int_0^{2\pi} f(t)\, g_{x_0,x}(t)dt \overset{23.1}{=} a_0 \int_0^{2\pi} g_{x_0,x}(t)dt + \sum_{k=1}^{+\infty} \Big[a_k \int_0^{2\pi} g_{x_0,x}(t)\cos kt\, dt$$

$$+ b_k \int_0^{2\pi} g_{x_0,x}(t) \sin kt\, dt\Big] \overset{(2)}{=} a_0 \int_{x_0}^{x} g(t)dt + \sum_{k=1}^{+\infty} \Big[a_k \int_{x_0}^{x} g(t) \cos kt\, dt +$$

$$+ b_k \int_{x_0}^{x} g(t) \sin kt\, dt \Big],$$

which completes the proof.

6. Theorem. Suppose:

1) $p \in (1,+\infty)$.

2) $f \in L^p(0,2\pi)$ (so that, by 3.10, also $f \in L(0,2\pi)$).

3) a_0, a_k, b_k $(k = 1,2,\ldots)$ are the usual Fourier coefficients of f so that $f(t) \sim a_0 + \sum_{k=1}^{+\infty} (a_k \cos kt + b_k \sin kt)$.

Then

$$\sum_{k=1}^{+\infty} \left| \frac{a_k}{k} \right| < +\infty, \quad \sum_{k=1}^{+\infty} \left| \frac{b_k}{k} \right| \quad +\infty.$$

Proof. We have already stated that the functions

$$(1) \qquad 1, \cos t, \sin t, \cos 2t, \sin 2t, \ldots$$

form an orthogonal system on $(0,2\pi)$ with respect to the weight function $w(t) = 1$ for all $t \in (0,2\pi)$ such that

$$(2) \qquad \|1\|^2_{L^2(0,2\pi)} = 2\pi, \quad \|\cos kt\|^2_{L^2(0,2\pi)} = \pi, \quad \|\sin kt\|^2_{L^2(0,2\pi)} = \pi \quad (k = 1,2,\ldots)$$

so that the numbers a_0, a_k, b_k $(k = 1,2,\ldots)$ in 3) are the Fourier coefficients of f with respect to (1) in the sense of 22.1. Besides, the functions (1) are uniformly bounded by 1 for all $t \in [0,2\pi]$.

First let $p \in (1,2)$ and $\frac{1}{p} + \frac{1}{q} = 1$. Then obviously

$$(3) \qquad \sum_{k=1}^{+\infty} \left(\frac{1}{k}\right)^p < +\infty,$$

and by the first Hausdorff-Young theorem 27.4

$$(4) \qquad \sum_{k=1}^{+\infty} \left[|a_k|^q + |b_k|^q \right] < +\infty.$$

Consequently, by the Hölder inequality for series,

$$\sum_{k=0}^{+\infty} \left| \frac{a_k}{k} \right| \overset{\text{Hölder}}{\leq} \left[\sum_{k=0}^{+\infty} \left(\frac{1}{k} \right)^p \right]^{\frac{1}{p}} \left[\sum_{k=0}^{+\infty} |a_k|^q \right]^{\frac{1}{q}} \overset{(3),(4)}{<} +\infty,$$

$$\sum_{k=0}^{+\infty} \left| \frac{b_k}{k} \right| \overset{\text{Hölder}}{\leq} \left[\sum_{k=0}^{+\infty} \left(\frac{1}{k} \right)^p \right]^{\frac{1}{p}} \left[\sum_{k=0}^{+\infty} |b_k|^q \right]^{\frac{1}{q}} \overset{(3),(4)}{<} +\infty,$$

so that the above statement holds.

Next let $p \in [2,+\infty)$. Then by 3.10, also $f \in L^2(0,2\pi)$ so that, by (2) and the Bessel theorem 1.22,

$$(5) \qquad 2\pi |a_0|^2 + \pi \sum_{k=1}^{+\infty} |a_k|^2 + \pi \sum_{k=1}^{+\infty} |b_k|^2 \leq \|f\|^2_{L^2(0,2\pi)} < +\infty.$$

Therefore, by the Hölder inequality for series,

$$\sum_{k=1}^{+\infty} \left| \frac{a_k}{k} \right| \overset{\text{Hölder}}{\leq} \left[\sum_{k=1}^{+\infty} |a_k|^2 \right]^{\frac{1}{2}} \left[\sum_{k=1}^{+\infty} \frac{1}{k^2} \right]^{\frac{1}{2}} \overset{(5)}{<} +\infty,$$

$$\sum_{k=1}^{+\infty} \left| \frac{b_k}{k} \right| \overset{\text{Hölder}}{\leq} \left[\sum_{k=1}^{+\infty} |b_k|^2 \right]^{\frac{1}{2}} \left[\sum_{k=1}^{+\infty} \frac{1}{k^2} \right]^{\frac{1}{2}} \overset{(5)}{<} +\infty,$$

so that again the above statement holds.

7. Theorem. Suppose:

1) $p \in (1,+\infty)$.

2) $f \in L^p(0,2\pi)$ (so that, by 3.10, also $f \in L(0,2\pi)$).

3) a_0, a_k, b_k $(k = 1,2,\ldots)$ are the usual Fourier coefficients of f so that $f(t) \sim a_0 + \sum_{k=1}^{+\infty} (a_k \cos kt + b_k \sin kt)$.

4) g is of bounded variation on $[0,2\pi]$.

Then the following holds:

I. $$\int_{x_0}^{x} f(t)\, g(t)dt = a_0 \int_{x_0}^{x} g(t)dt + \sum_{k=1}^{+\infty} \left[a_k \int_{x_0}^{x} g(t) \cos kt\, dt + b_k \int_{x_0}^{x} g(t) \sin kt\, dt \right]$$ for all $x_0, x \in [0,2\pi]$.

II. The series on the right-hand side in I. converges absolutely and uniformly for all $x_0, x \in [0,2\pi]$.

Proof. I. Immediately follows from 2) and 5.

II. We may suppose that g is real on $[0,2\pi]$ since otherwise we would investigate the real and imaginary parts of g separately using the fact that, by 4), both of them are of bounded variation on $[0,2\pi]$.

Next we may suppose that

(1) $$g(0) = g(2\pi) = 0$$

because this may be achieved by changing the definition of g at the points 0, 2π, which preserves both the boundedness of variation and the Fourier coefficients of g.

Since g is of bounded variation on $[0,2\pi]$ there exists M such that

$$(2) \qquad |g(t)| \leq M < +\infty \qquad \text{for all} \quad t \in [0,2\pi].$$

Set

$$(3) \qquad g_x(t) = \begin{cases} g(t) & \text{for all} \quad t \in [0,x] \\ 0 & \text{for all} \quad t \in (x,2\pi] \end{cases}, \quad \text{and all} \quad x \in [0,2\pi].$$

By (1) and (3),

$$(4) \qquad g_x \text{ is of period } 2\pi \text{ for all } x \in [0,2\pi].$$

Denoting the variation of a function φ on $[a,b]$ by $\bigvee_a^b (\varphi)$ we have

$$(5) \quad \begin{cases} \bigvee_0^{2\pi} (g_x) = \bigvee_0^{x} (g_x) + \bigvee_x^{2\pi} (g_x) \overset{(3)}{=} \bigvee_0^{x} (g) + |g(x)| \overset{(2)}{\leq} \\ \overset{(2)}{\leq} \bigvee_0^{2\pi} (g) + M \overset{4),(2)}{<} +\infty \quad \text{for all} \quad x \in [0,2\pi]. \end{cases}$$

Next, denoting the usual Fourier coefficients of g_x by $\alpha_0(x)$, $\alpha_k(x)$, $\beta_k(x)$ $(k = 1,2,\ldots)$ for all $x \in [0,2\pi]$ we have

$$(6)\left\{\begin{aligned}
&\int_{x_0}^{x} g(t)dt = 2\pi\left[\frac{1}{2\pi}\int_0^x g(t)dt - \frac{1}{2\pi}\int_0^{x_0} g(t)dt\right] \overset{(3)}{=} 2\pi\left[\frac{1}{2\pi}\int_0^{2\pi} g_x(t)dt\right.\\
&\left. - \frac{1}{2\pi}\int_0^{2\pi} g_{x_0}(t)dt\right] = 2\pi\left[\alpha_0(x) - \alpha_0(x_0)\right] \text{ for all } x_0, x \in [0,2\pi],\\
&\int_{x_0}^{x} g(t)\cos kt\,dt = \pi\left[\frac{1}{\pi}\int_0^x g(t)\cos kt\,dt - \frac{1}{\pi}\int_0^{x_0} g(t)\cos kt\,dt\right] \overset{(3)}{=}\\
&\overset{(3)}{=} \pi\left[\frac{1}{\pi}\int_0^{2\pi} g_x(t)\cos kt\,dt - \frac{1}{\pi}\int_0^{2\pi} g_{x_0}(t)\cos kt\,dt\right] = \pi\left[\alpha_k(x) - \alpha_k(x_0)\right],\\
&\int_{x_0}^{x} g(t)\sin kt\,dt = \pi\left[\frac{1}{\pi}\int_0^x g(t)\sin kt\,dt - \frac{1}{\pi}\int_0^{x_0} g(t)\sin kt\,dt\right] \overset{(3)}{=}\\
&\overset{(3)}{=} \pi\left[\frac{1}{\pi}\int_0^{2\pi} g_x(t)\sin kt\,dt - \frac{1}{\pi}\int_0^{2\pi} g_{x_0}(t)\sin kt\,dt\right] =\\
&= \pi\left[\beta_k(x) - \beta_k(x_0)\right] \text{ for all } x_0, x \in [0,2\pi],\quad k = 1,2,\ldots .
\end{aligned}\right.$$

But, by (3) and (2),

$$(7)\qquad |\alpha_0(x)| = \left|\frac{1}{2\pi}\int_0^{2\pi} g_x(t)dt\right| \leq \frac{1}{2\pi}\int_0^{2\pi} |g_x(t)|dt \overset{(3),(2)}{\leq} M \text{ for all } x \in [0,2\pi]$$

and by (4), (5) and 1.,

$$(8) \qquad |\alpha_k(x)|\,,\ |\beta_k(x)| \overset{(4),(5),1.}{\leq} \bigvee_0^{2\pi}(g_x)\ \frac{1}{2k} \overset{(5)}{\leq} \left[\bigvee_0^{2\pi}(g) + M\right]\frac{1}{2k}$$

$$\text{for all } x \in [0,2\pi]\ ,\quad k = 1,2,\ldots\ .$$

By (6), (7), and (8),

$$(9)\quad \begin{cases} \left|\int_{x_0}^{x} g(t)dt\right| \overset{(6),(7)}{\leq} 4\pi M & \text{for all } x_0,x \in [0,2\pi]\,, \\ \left|\int_{x_0}^{x} g(t)\cos kt\,dt\right|,\ \left|\int_{x_0}^{x} g(t)\sin kt\,dt\right| \overset{(6),(8)}{\leq} \pi\left[\bigvee_0^{2\pi}(g)+M\right]\frac{1}{k} & \text{for all} \\ x_0,x \in [0,2\pi],\quad k = 1,2,\ldots\ . \end{cases}$$

But (9) implies that, for all $x_0,x \in [0,2\pi]$, the series on the right-hand side of I. is majorized by the series

$$4\pi M\,|a_0| + \pi\left[\bigvee_0^{2\pi}(g)+ M\right]\left(\sum_{k=1}^{+\infty}\left|\frac{a_k}{k}\right| + \sum_{k=1}^{+\infty}\left|\frac{b_k}{k}\right|\right);$$

which does not depend on x_0,x and, by 6., is convergent. Hence, by the Weierstrass test, our statement follows.

8. Remark. The results in 1.-6. may be found in various books on Fourier series. But II. in 7. is new, and will be applied in the next two sections.

§ 29. The term-by-term Laplace transformation of the of the usual Fourier expansion of $f \in L(0,2\pi)$

1. Theorem. Suppose:

1) $\operatorname{Re} z \in (0,+\infty)$.

2) $f \in L(0,2\pi)$ with period 2π.

3) $$\left.\begin{aligned} a_0 = \frac{1}{2\pi}\int_0^{2\pi} f(t)dt, \quad a_k = \frac{1}{\pi}\int_0^{2\pi} f(t)\cos kt\, dt \\ b_k = \frac{1}{\pi}\int_0^{2\pi} f(t)\sin kt\, dt \end{aligned}\right\} \text{for } k = 1,2,\ldots$$

(Consequently f has the usual Fourier expansion

$$f(t) \sim a_0 + \sum_{k=1}^{+\infty} (a_k \cos kt + b_k \sin kt).)$$

Then

$$\int_0^{+\infty} f(t)d^{-zt}dt = a_0 \int_0^{+\infty} e^{-zt}dt + \sum_{k=0}^{+\infty} \left(a_k \int_0^{+\infty} e^{-zt}\cos kt\, dt + b_k \int_0^{+\infty} e^{-zt}\sin kt\, dt\right).$$

Proof. It is easy to check that the functions

(1) $\quad 1, \cos t, \sin t; \quad \cos 2t, \sin 2t, \ldots$

form an orthogonal system on $(0,2\pi)$ with respect to the weight function

(2) $$w(t) = 1 \quad \text{for all} \quad t \in (0,2\pi)$$

such that

(3) $$\|1\|^2_{L^2(0,2\pi)} = 2\pi, \|\cos kt\|^2_{L^2(0,2\pi)} = \pi, \|\sin kt\|^2_{L^2(0,2\pi)} = \pi$$

$$(k = 1,2,\ldots)$$

so that, by 2), the numbers a_0, a_k, b_k $(k = 1,2,\ldots)$ in 3) are the Fourier coefficients of f with respect to (1) in the sense of 22.1.

We may suppose that f is real-valued since otherwise we would investigate its real and imaginary parts separately.

Next, the real and imaginary parts of the function e^{-zt} of t are of bounded variation on $[0,2\pi]$ so that applying 28.4 to both of them we see that the Fourier expansion of e^{-zt} with respect to (1) converges to e^{-zt} for all $t \in (0,2\pi)$ and its partial sums are uniformly bounded for all $t \in (0,2\pi)$.

Consequently all the assumptions of 23.3 are satisfied if we choose a sufficiently large constant for h, and then the above formula follows from 23.3.

2. Remark. The preceding theorem was published by the author in 1965 Novotný (29). The original proof given there, however, was more complicated than the present proof. This includes a simplification by Professor Rooney in Toronto which has already been mentioned in 17.3.

§ 30. Some special properties of the standard Tchebysheff polynomials

1. Theorem. Let T_n denote the standard Tchebysheff polynomial of degree n for $n = 0,1,\ldots$ (see 10.4). Then $T_n(\cos\varphi) = \cos n\varphi$ for all complex φ, and all $n = 0,1,\ldots$.

Proof. Consider the polynomials

$$(1)\qquad \left\{\begin{aligned} &Q_0(t) = 1 \\ &Q_n(t) = \sum_{0\le 2k\le n} \binom{n}{2k} t^{n-2k}(t^2-1)^k \quad (n = 1,2,\ldots) \end{aligned}\right\} \text{ for all complex } t.$$

Obviously

(2) $\qquad Q_0$ is of degree 0 with leading coefficient $a_0 = 1$.

Next fix any $n = 1,2,\ldots$. By (1), Q_n has leading coefficient $a_n = \sum_{0\le 2k\le n} \binom{n}{2k}$. By the binomial theorem, $2^n = (1+1)^n = \sum_{k=0}^{n} \binom{n}{k}$, $0 = (1-1)^n = \sum_{k=0}^{n} (-1)^k \binom{n}{k}$, whence by addition $2^n = 2 \sum_{0\le 2k\le n} \binom{n}{2k}$.

Consequently $a_n = \sum_{0\le 2k\le n} \binom{n}{2k} = 2^{n-1} \neq 0$, i.e.

(3) $\qquad Q_n$ is of degree n with leading coefficient $a_n = 2^{n-1}$ $(n = 1,2,\dots)$.

Keep n fixed, $n = 1,2,\dots$. Then $\cos n\varphi + i \sin n\varphi =$

$$= (\cos\varphi + i\sin\varphi)^n = \sum_{k=0}^{n} i^k \binom{n}{k} \cos^{n-k}\varphi \, \sin^k\varphi \quad \text{for all} \quad \varphi \in (-\infty,+\infty).$$

Comparing the real parts we obtain $\cos n\varphi = \sum_{0\le 2k\le n} (-1)^k \binom{n}{2k} \cos^{n-2k}\varphi \, \sin^{2k}\varphi =$

$$= \sum_{0\le 2k\le n} \binom{n}{2k} \cos^{n-2k}\varphi \, (\cos^2\varphi - 1)^k \overset{(1)}{=} Q_n(\cos\varphi) \quad \text{for all} \quad \varphi \in (-\infty,+\infty).$$

Since both sides are holomorphic functions for all complex φ the formula remains true for all complex φ . By (2), it is also correct for $n = 0$ and all complex φ . Hence

(4) $\qquad Q_n(\cos\varphi) = \cos n\varphi \qquad$ for all complex φ , and all $n = 0,1,\dots$.

Next it is easy to check that the functions

(5) $\qquad \left\{ \begin{array}{l} 1, \cos\varphi, \cos 2\varphi, \dots \text{ form an orthogonal system on } (0,\pi) \\ \text{with respect to the weight function } w(\varphi) = 1 \text{ for all } \varphi \in (0,2\pi). \end{array} \right.$

By (4) and (5),

$$\int_{-1}^{1} \frac{Q_m(t)\,Q_n(t)}{\sqrt{1-t^2}}\,dt = \left| \begin{array}{l} t = \cos\varphi \,,\ 0 \le \varphi \le \pi \\ \sqrt{1-t^2} = \sqrt{1-\cos^2\varphi} = \sqrt{\sin^2\varphi} = |\sin\varphi| = \sin\varphi \\ dt = -\sin\varphi\, d\varphi \end{array} \right. \qquad \begin{array}{c|c} t & \varphi \\ \hline -1 & \pi \\ 1 & 0 \end{array}$$

$$= \int_0^{\pi} Q_m(\cos\varphi)\,Q_n(\cos\varphi)\,d\varphi \overset{(4)}{=} \int_0^{\pi} \cos m\varphi \cos n\varphi \, d\varphi \overset{(5)}{=} 0 \text{ for } m,n =$$

$$= 0,1,\dots, \quad m \ne n.$$

so that

$$(6)\quad \begin{cases} Q_0, Q_1, \ldots \text{ form an orthogonal system on } (-1,1) \\ \text{with respect to the weight function } w(t) = \dfrac{1}{\sqrt{1-t^2}} \text{ for all } t \in (-1,1). \end{cases}$$

Since, by (1) and (2), Q_n is a polynomial of degree n with real coefficients $(n = 0,1,\ldots)$ it follows from 5.3 and (6) by 5.2 that

$$(7)\quad \begin{cases} T_n(t) = c_n Q_n(t) \quad \text{for some } 0 \neq c_n \in (-\infty,+\infty) \text{ for all } t \\ \text{and all } n = 0,1,\ldots \ . \end{cases}$$

Since, by 10.6 and (3), T_n and Q_n have the same leading coefficients for each $n = 0,1,\ldots$ we have

$$(8)\qquad c_n = 1 \quad \text{for} \quad n = 0,1,\ldots \ .$$

But (7), (8) and (4) imply our formula.

<u>2. Theorem</u>. <u>Let</u> $1 \leq p \leq +\infty$. <u>Then the following holds:</u>

I. $\quad f(t) \in L^p_{\frac{1}{\sqrt{1-t^2}}}(-1,1) \iff f(\cos\varphi) \in L^p(0,\pi)$.

II. <u>If one of the conditions in</u> I. <u>is satisfied, the Fourier coefficients</u> $c_k(f)$ <u>of</u> f <u>with respect to</u> T_k <u>in the sense of</u> 22.1, <u>i.e.</u>

$$(1) \qquad c_k(f) = \frac{1}{\|T_k\|^2_{L^2_{\frac{1}{\sqrt{1-t^2}}}(-1,1)}} \int_{-1}^{1} \frac{f(t)\, T_k(t)}{\sqrt{1-t^2}}\, dt \quad (k = 0,1,\ldots),$$

<u>exist and coincide with the usual Fourier coefficients</u> a_k $(k = 0,1,\ldots)$ <u>of the even function</u> $f(\cos\varphi)$ <u>for all</u> $\varphi \in [0,2\pi]$ <u>so that</u>

$$(2) \qquad f(\cos\varphi) \sim \sum_{k=0}^{+\infty} c_k(f) \cos k\varphi .$$

<u>Proof</u>. I. If $1 \leq p < +\infty$ then

$$f(t) \in L^p_{\frac{1}{\sqrt{1-t^2}}}(-1,1) \Leftrightarrow \int_{-1}^{1} \frac{|f(t)|^p}{\sqrt{1-t^2}}\, dt = \left| \begin{array}{l} t = \cos\varphi\ ,\ 0 \leq \varphi \leq \pi \\ \sqrt{1-t^2} = \sqrt{1-\cos^2\varphi} = \sqrt{\sin^2\varphi} = |\sin\varphi| = \sin\varphi \\ dt = -\sin\varphi\ d\varphi \end{array} \right. \quad \begin{array}{|c|c|} t & \varphi \\ \hline -1 & \pi \\ 1 & 0 \end{array}$$

$$= \int_0^{\pi} |f(\cos\varphi)|^p\, d\varphi = \text{finite} \Leftrightarrow f(\cos\varphi) \in L^p(0,\pi).$$

If $p = +\infty$ then $f(t) \in L^p_{\frac{1}{\sqrt{1-t^2}}}(-1,1) \Leftrightarrow f$ = essentially bounded on

$(-1,1) \Leftrightarrow f(\cos\varphi)$ = essentially bounded on $(0,\pi) \Leftrightarrow f(\cos\varphi) \in L^p(0,\pi)$.

II. Let one of the equivalent conditions in I. be satisfied. Then the existence of (1) for $p = 1, +\infty$ is obvious, and for $1 < p < +\infty$ easily follows from the Hölder inequality. By the same substitution as in I.,

$$c_k(f) = \frac{1}{\|T_k\|_2^2} \int_{-1}^{1} \frac{f(t)\, T_k(t)}{\sqrt{1-t^2}}\, dt = \frac{1}{\|T_k\|_2^2} \int_0^{\pi} f(\cos\varphi)\, T_k(\cos\varphi)\, d\varphi \overset{1.}{=}$$

$$\overset{1.}{=} \frac{1}{\|T_k\|_2^2} \int_0^{\pi} \underbrace{f(\cos\varphi)\cos k\varphi}_{\text{even}}\, d\varphi = \frac{1}{2}\, \frac{1}{\|T_k\|_2^2} \int_0^{2\pi} f(\cos\varphi)\cos k\varphi\, d\varphi$$

for $k = 0,1,\ldots$.

By 10.6, $\|T_0\|_2^2 = \pi$, $\|T_k\|_2^2 = \frac{1}{2}\pi$ for $k = 1,2,\ldots$. Hence $c_k(f) = a_k$ for $k = 0,1,\ldots$.

<u>3. Theorem</u>. <u>Let</u> U_n <u>be the standard conjugate Tchebysheff polynomial of degree</u> n <u>for</u> $n = 0,1,\ldots$ (see 10.7). <u>Then</u> $U_n(\cos\varphi) = \dfrac{\sin(n+1)\varphi}{\sin\varphi}$ <u>for all complex</u> $\varphi \neq h\pi$ $(h = 0, \pm 1, \ldots)$, <u>and all</u> $n = 0,1,\ldots$.

<u>Proof</u>. Consider the polynomials

$$(1)\quad \begin{cases} Q_n(t) = \displaystyle\sum_{0 \le 2k \le n} \binom{n+1}{2k+1}\, t^{n-2k}(t^2-1)^k & \text{for } n = 0,1,\ldots, \text{ and} \\ \text{all complex } t. \end{cases}$$

Fix any $n = 0,1,\ldots$. By (1), Q_n has leading coefficient $a_n = \displaystyle\sum_{0 \le 2k \le n} \binom{n+1}{2k+1}$. By the binomial expansion, $2^{n+1} = (1+1)^{n+1} = \displaystyle\sum_{k=0}^{n+1} \binom{n+1}{k}$ and $0 = (1-1)^{n+1} = \displaystyle\sum_{0 \le 2k \le n} (-1)^k \binom{n+1}{k}$, whence by subtraction

$2^{n+1} = 2 \displaystyle\sum_{0 \le 2k+1 \le n+1} \binom{n+1}{2k+1} = 2 \sum_{0 \le 2k \le n} \binom{n+1}{2k+1}$. Consequently

$$a_n = \sum_{0 \leq 2k \leq n} \binom{n+1}{2k+1} = 2^n \neq 0, \text{ i.e.}$$

(2) Q_n is of degree n with leading coefficient $a_n = 2^n$ $(n = 0,1,\ldots)$.

Keep n fixed, $n = 0,1,\ldots$. Then $\cos(n+1)\varphi + i\sin(n+1)\varphi =$

$$= (\cos\varphi + i\sin\varphi)^{n+1} = \sum_{k=0}^{n+1} i^k \binom{n+1}{k} \cos^{n+1-k}\varphi \sin^k\varphi \quad \text{for all} \quad \varphi \in (-\infty,+\infty).$$

Comparing the imaginary parts we obtain $\sin(n+1)\varphi =$

$$= \sum_{0 \leq 2k+1 \leq n+1} i^{2k} \binom{n+1}{2k+1} \cos^{(n+1)-(2k+1)}\varphi \sin^{2k+1}\varphi =$$

$$= \sin\varphi \sum_{0 \leq 2k \leq n} (-1)^k \binom{n+1}{2k+1} \cos^{n-2k}\varphi \sin^{2k}\varphi =$$

$$= \sin\varphi \sum_{0 \leq 2k \leq n} \binom{n+1}{2k+1} \cos^{n-2k}\varphi \, (\cos^2\varphi - 1)^k \overset{(1)}{=} \sin\varphi \; Q_n(\cos\varphi)$$

for all $\varphi \in (-\infty,+\infty)$. Since both sides are holomorphic functions for all complex φ the formula remains correct for all complex φ . Hence

(3) $\left\{ \begin{array}{l} Q_n(\cos\varphi) = \dfrac{\sin(n+1)\varphi}{\sin\varphi} \quad \text{for all complex } \varphi \neq h\pi \quad (h = 0, \pm 1, \ldots), \\ \text{and all } h = 0,1,\ldots \; . \end{array} \right.$

Next it is easy to check that the functions

(4) $\left\{ \begin{array}{l} \sin\varphi \,,\ \sin 2\varphi \,,\ldots \text{ form an orthogonal system on } (0,\pi) \\ \text{with respect to the weight function } w(\varphi) = 1 \text{ for all } \varphi \in (0,\pi). \end{array} \right.$

By (3) and (4),

$$\int_{-1}^{1} Q_m(t)\, Q_n(t)\, \sqrt{1-t^2}\; dt = \left| \begin{array}{l} t = \cos\varphi\ ,\ 0 \leq \varphi \leq \pi \\ \sqrt{1-t^2} = \sqrt{1-\cos^2\varphi} = \sqrt{\sin^2\varphi} = |\sin\varphi| = \sin\varphi \\ dt = -\sin\varphi\; d\varphi \end{array} \right. \quad \begin{array}{c|c} t & \varphi \\ \hline -1 & \pi \\ 1 & 0 \end{array}$$

$$= \int_0^{\pi} Q_m(\cos\varphi)\, Q_n(\cos\varphi)\, \sin^2\varphi\; d\varphi \overset{(3)}{=} \int_0^{\pi} \sin(m+1)\varphi\; \sin(n+1)\varphi\; d\varphi \overset{(4)}{=}$$

$$\overset{(4)}{=} 0 \quad \text{for } m,\ n = 0,1,\ldots;\ m \neq n.$$

so that

(5) $\left\{ \begin{array}{l} Q_0, Q_1, \ldots \text{ form an orthogonal system on } (-1,1) \\ \text{with respect to the weight function } w(t) = \sqrt{1-t^2} \text{ for all } t \in (-1,1). \end{array} \right.$

Since, by (1) and (2), Q_n is a polynomial of degree n with real coefficients $(n = 0,1,\ldots)$ it follows from 5.3 and (5) by 5.2 that

(6) $\left\{ \begin{array}{l} U_n(t) = c_n\, Q_n(t) \text{ for some } 0 \neq c_n \in (-\infty,+\infty) \text{ for all complex } t, \\ \text{and all } n = 0,1,\ldots\ . \end{array} \right.$

Since, by 10.9 and (2), U_n and Q_n have the same leading coefficients for each $n = 0,1,\ldots$ we have

(7) $$c_n = 1 \quad \text{for } n = 0,1,\ldots\ .$$

But (6), (7) and (3) imply our formula.

4. Theorem. Let $1 \leq p < +\infty$. Then the following holds:

I. $$\int_{-1}^{1} |f(t)|^p (1-t^2)^{\frac{1}{2}(p-1)} dt < +\infty \Leftrightarrow \int_0^{2\pi} |f(\cos\varphi) \sin\varphi|^p d\varphi < +\infty$$

II. If one of the equivalent conditions in I. is satisfied then

(i) $$\int_{-1}^{1} |f(t)| dt < +\infty,$$

(ii) the Fourier coefficients $c_k(f)$ of f with respect to U_k exist $(k = 0,1,\ldots)$,

(iii) they coincide with the usual Fourier coefficients b_{k+1} $(k = 0,1,\ldots)$ of the odd function $f(\cos\varphi)\sin\varphi$ for all $\varphi \in [0,2\pi]$ so that

$$f(\cos\varphi)\sin\varphi \sim \sum_{k=0}^{+\infty} c_k(f) \sin(k+1)\varphi$$

Proof. I. Obviously

$$\int_0^{2\pi} \underbrace{|f(\cos\varphi)\sin\varphi|^p}_{\text{period } 2\pi} d\varphi = \int_{-\pi}^{\pi} \underbrace{|f(\cos\varphi)\sin\varphi|^p}_{\text{even}} d\varphi = 2\int_0^{\pi} |f(\cos\varphi)\sin\varphi|^p d\varphi =$$

$$= 2\int_0^{\pi} |f(\cos\varphi)|^p \sin^p\varphi \, d\varphi = 2\int_0^{\pi} |f(\cos\varphi)|^p (1-\cos^2\varphi)^{\frac{1}{2}p} d\varphi = \left| \begin{array}{l} \cos\varphi = t \\ \varphi = \arccos t \\ d\varphi = -\dfrac{dt}{\sqrt{1-t^2}} \end{array} \right. \quad \begin{array}{c|c} \varphi & t \\ \hline 0 & 1 \\ \pi & -1 \end{array}$$

$$= 2\int_{-1}^{1} |f(t)|^p (1-t^2)^{\frac{1}{2}p} \frac{dt}{(1-t^2)^{\frac{1}{2}}} = 2\int_{-1}^{1} |f(t)|^p (1-t^2)^{\frac{1}{2}(p-1)} dt.$$

if at least one side is finite.

II. Let one of the two equivalent conditions in I. be satisfies. If $p = 1$ then (i) immediately follows from I. Let $p \in (1,+\infty)$ and $\frac{1}{p} + \frac{1}{q} = 1$. Then, by the Hölder inequality with respect to the weight function $w(t) = \frac{1}{\sqrt{1-t^2}}$ on $(-1,1)$,

$$\int_{-1}^{1} |f(t)|\,dt = \int_{-1}^{1} |f(t)|\,(1-t^2)^{\frac{1}{2}}\;1\;\frac{dt}{\sqrt{1-t^2}} \overset{\text{Hölder}}{\leq}$$

$$\overset{\text{Hölder}}{\leq} \left[\int_{-1}^{1} |f(t)|^p\,(1-t^2)^{\frac{1}{2}p}\,\frac{dt}{\sqrt{1-t^2}}\right]^{\frac{1}{p}} \left[\int_{-1}^{1} \frac{1^q}{\sqrt{1-t^2}}\right]^{\frac{1}{q}} =$$

$$= \left[\int_{-1}^{1} |f(t)|^p\,(1-t^2)^{\frac{1}{2}(p-1)}\,dt\right]^{\frac{1}{p}} \left[\int_{-1}^{1} \frac{dt}{\sqrt{1-t^2}}\right]^{\frac{1}{q}} \overset{\text{I.}}{<} +\infty$$

so that again (i) holds.

Next, by 22.1 and (i),

$$\|U_k\|^2_{L^2_{\sqrt{1-t^2}}(-1,1)}\,|c_k(f)| \overset{22.1}{\leq} \int_{-1}^{1} |f(t)|\underbrace{|U_k(t)|}_{\leq M_k < +\infty}\underbrace{\sqrt{1-t^2}}_{\leq 1}\,dt \leq M_k \int_{-1}^{1} |f(t)|\,dt \overset{\text{(i)}}{<} +\infty$$

$(k = 0,1,\ldots)$,

which proves (ii).

Finally, by 3. and 10.9, writing $\|U_k\|_2$ instead of $\|U_k\|_{L^2_{\sqrt{1-t^2}}(-1,1)}$,

$$c_k(f) = \frac{1}{\|U_k\|_2^2} \int_{-1}^{1} f(t)\, U_k(t) \sqrt{1-t^2}\, dt =$$

$$= \left| \begin{array}{l} t = \cos\varphi \ , \quad 0 \le \varphi \le \pi \\ \sqrt{1-t^2} = \sqrt{1-\cos^2\varphi} = \sqrt{\sin^2\varphi} = |\sin\varphi| = \sin\varphi \\ dt = -\sin\varphi \ \ d\varphi \end{array} \quad \begin{array}{c|c} t & \varphi \\ \hline -1 & \pi \\ 1 & 0 \end{array} \right| =$$

$$= \frac{1}{\|U_k\|_2^2} \int_0^{\pi} f(\cos\varphi)\, U_k(\cos\varphi)\, \sin^2\varphi\, d\varphi \overset{3.}{=} \frac{1}{\|U_k\|_2^2} \int_0^{\pi} f(\cos\varphi)\, \frac{\sin(k+1)\varphi}{\sin\varphi} \sin^2\varphi\ \ d\varphi =$$

$$= \frac{1}{\|U_k\|_2^2} \int_0^{\pi} \underbrace{f(\cos\varphi)\, \sin\varphi\ \sin(k+1)\varphi}_{\text{even}}\ \ d\varphi = \frac{1}{2\,\|U_k\|_2^2} \int_0^{2\pi} f(\cos\varphi)\, \sin\varphi \sin\,(k+1)\varphi\ \ d\varphi =$$

$$\overset{10.9}{=} \frac{1}{\pi} \int_0^{2\pi} f(\cos\varphi)\, \sin\varphi\ \ \sin(k+1)\varphi\ \ d\varphi = b_{k+1} \quad (k = 0,1,\ldots),$$

which proves (iii).

5. Remark. The results in 1. and 3. are well known. As for those in 2. and 4., I am not sure but in any case their proofs are easy.

§ 31. The term-by-term integration and Laplace transformation of a Fourier expansion of $f \in L_w(-1,1)$ in terms of Tchebysheff polynomials

1. Theorem. Suppose:

1) T_k is the standard Tchebysheff polynomial of degree k for $k = 0,1,\ldots$ (see 10.4).

2) $f \in L_{\frac{1}{\sqrt{1-t^2}}}(-1,1)$.

3) $c_k(f)$ are the Fourier coefficients of f with respect to T_k for $k = 0,1,\ldots$ in the sense of 22.1. (They exist by 30.2 so that $f(t) \sim \sum_{k=0}^{+\infty} c_k(f)\, T_k(t)$.)

4) g is of bounded variation on $[-1,1]$.

Then $$\int_{x_0}^{x} f(t)\, g(t)dt = \sum_{k=0}^{+\infty} c_k(f) \int_{x_0}^{x} g(t)\, T_k(t)\, dt$$

for all $x_0, x \in [-1,1]$.

Proof. Consider the functions

(1) $F(\varphi) = f(\cos\varphi)$ for all $\varphi \in [0,2\pi]$,

(2) $G(\varphi) = \begin{cases} g(\cos\varphi)\sin\varphi & \text{for all } \varphi \in [0,\pi], \\ 0 & \text{for all } \varphi \in (\pi,2\pi]. \end{cases}$

By (1), 2) and 30.2,

(3) $F \in L(0,2\pi)$.

By (1), 2) 3), and 30.2,

(4) $c_k(f)$ coincide with the usual Fourier coefficients a_k of F $(k = 0,1,\ldots)$.

Since, by (1), the periodic extension of F from $[0,2\pi]$ into $(-\infty,+\infty)$ with period 2π is an even function

(5) the usual Fourier coefficients b_k of F vanish $(k = 1,2,\ldots)$.

By 4), $g(\cos\varphi)$ has a finite variation on $[0,\pi]$. The same is true for $\sin\varphi$. Therefore, by (2), G is of bounded variation on $[0,\pi]$. Besides, G is monotone and thus of bounded variation on $[\pi,2\pi]$. Consequently,

(6) G is of bounded variation on $[0,2\pi]$.

Obviously $t = \cos\varphi$ is a one-to-one mapping of $[0,\pi]$ onto $[-1,1]$ so that,

(7) $\left\{ \begin{array}{l} \text{to each } x_0, x \in [-1,1], \text{ there exist } \Phi_0, \Phi \in [0,\pi] \text{ such} \\ \text{that } x_0 = \cos \Phi_0, \ x = \cos \Phi, \text{ and are uniquely determined} \\ \text{by } x_0, x . \end{array} \right.$

Fixing any $x_0, x \in [-1,1]$ it follows from (3)-(7) by 28.5 that

(8) $$\int_{\Phi}^{\Phi_0} F(\varphi)\, G(\varphi)\, d\varphi = \sum_{k=0}^{+\infty} c_k(f) \int_{\Phi}^{\Phi_0} G(\varphi) \cos k\varphi \, d\varphi .$$

Finally, by (1), (2), (7) and 30.1,

(9) $$\left\{ \begin{array}{l} \displaystyle\int_{\Phi}^{\Phi_0} F(\varphi)\, G(\varphi)\, d\varphi \overset{(1),(2)}{=} \int_{\Phi}^{\Phi_0} f(\cos\varphi)\, g(\cos\varphi) \sin\varphi \, d\varphi \overset{\cos\varphi = t}{\underset{(7)}{=}} \\ \displaystyle \overset{\cos\varphi = t}{\underset{(7)}{=}} \int_{x_0}^{x} f(t)\, g(t) dt. \end{array} \right.$$

(10) $$\left\{ \begin{array}{l} \displaystyle\int_{\Phi}^{\Phi_0} G(\varphi) \cos k\varphi \, d\varphi \overset{(2)}{=} \int_{\Phi}^{\Phi_0} g(\cos\varphi) \sin\varphi \cos k\varphi \, d\varphi \overset{30.1}{=} \\ \displaystyle \overset{30.1}{=} \int_{\Phi}^{\Phi_0} g(\cos\varphi)\, T_k(\cos\varphi) \sin\varphi \, d\varphi \overset{\cos\varphi = t}{\underset{(7)}{=}} \int_{x_0}^{x} g(t)\, T_k(t)\, dt \\ \qquad \text{for all } k = 0,1,\ldots \end{array} \right.$$

Setting (9), (10) into (8) we obtain the above formula.

2. Theorem. Suppose:

1) T_k are the standard Tchebysheff polynomial of degree k $(k = 0,1,\ldots)$ (see 10.4).

2) $p \in (1,+\infty)$,

3) $f \in L^p_{\frac{1}{\sqrt{1-t^2}}}(-1,1)$.

4) $c_k(f)$ are the Fourier coefficients of f with respect to T_k for $k = 0,1,\ldots$ in the sense of 22.1. (They exist by 30.2 so that $f(t) \sim \sum_{k=0}^{+\infty} c_k(f)\, T_k(t)$.)

5) g is of bounded variation on $[-1,1]$.

Then

$$\int_{x_0}^{x} f(t)\, g(t)dt = \sum_{k=0}^{+\infty} c_k(f) \int_{x_0}^{x} g(t)\, T_k(t)dt \quad \text{for all} \quad x_0,x \in [-1,1],$$

where the series on the right-hand side converges absolutely and uniformly for all $x_0,x \in [-1,1]$.

Proof is the same as in 1. with the exception of the following two steps.

Firstly, instead of the formula (3) in 1., we have, by (1) in 1., 3) and 30.2, the formula

(3a) $F \in L^p(0,2\pi)$.

Secondly, instead of the formula (8) in 1., it follows from (3a) and (4)-(7) in 1. by 27.7 that we have

$$(8a)\quad \begin{cases} \displaystyle\int_{\Phi}^{\Phi_0} F(\varphi)\, G(\varphi)\, d\varphi = \sum_{k=0}^{+\infty} c_k(f) \int_{\Phi}^{\Phi_0} G(\varphi) \cos k\varphi \, d\varphi \\ \text{absolutely and uniformly for all} \quad \Phi_0, \Phi \in [0,\pi]. \end{cases}$$

Then the result may be derived analogously as in 1.

<u>3. Theorem</u>. <u>Suppose</u>:

1) $\operatorname{Re} z \in (0,+\infty)$.

2) T_k <u>is the standard Tchebysheff polynomial of degree</u> k <u>for</u> $k = 0,1,\ldots$ (see 10.4).

3) $\tilde{T}_k$ <u>is a periodic extension of</u> T_k <u>from</u> $[-1,1]$ <u>into</u> $[-1,+\infty)$ <u>with period</u> 2 $(k = 0,1,\ldots)$.

4) $f \in L_{\frac{1}{\sqrt{1-t^2}}}(-1,1)$ <u>with period</u> 2.

5) $c_k(f)$ <u>are the Fourier coefficients of</u> f <u>with respect to</u> T_k <u>for</u> $k = 0,1,\ldots$ <u>in the sense of</u> 22.1. (They exist by 30.2 so that $f(t) \sim \sum_{k=0}^{+\infty} c_k(f)\, U_k(t)$.)

<u>Then</u> $$\int_0^{+\infty} f(t-1)e^{-zt}\, dt = \sum_{k=0}^{+\infty} c_k(f) \int_0^{+\infty} \tilde{T}_k(t-1)e^{-zt}\, dt.$$

Proof. The function $g(u) = e^{-z(u+1)}$ for all $u \in [-1,1]$ is of bounded variation on $[-1,1]$ so that, by 1. and 2), $\int_{-1}^{1} f(u)\, e^{-z(u+1)} du \overset{1.}{=}$

$$\overset{1.}{=} \sum_{k=0}^{+\infty} c_k(f) \int_{-1}^{1} T_k(u)\, e^{-z(u+1)} du \overset{3)}{=} \sum_{k=0}^{+\infty} c_k(f) \int_{-1}^{1} T_k(u)\, e^{-z(u+1)} du.$$

Hence, by the substitution $u = t-1$,

$$(1) \qquad \int_0^2 f(t-1)e^{-zt} dt = \sum_{k=0}^{+\infty} c_k(f) \int_0^2 \tilde{T}_k(t-1)e^{-zt} dt.$$

Since the function $\frac{1}{e^{-zt}}$ is bounded for all $t \in [0,2]$ and, by 2) and 3), so are the functions $\tilde{T}_k(t-1)$ $(k = 0,1,\ldots)$, it follows from (1) that

$$(2) \qquad f(t-1),\ \tilde{T}_k(t-1) \in L(0,2) \quad (k = 0,1,\ldots).$$

But then (1), (2) and the extension theorem 17.2 imply the result.

4. Theorem. Suppose:

1) U_k is the standard conjugate Tchebysheff polynomial of degree k for $k = 0,1,\ldots$ (see 10.7).

2) $f \in L(-1,1)$.

3) $c_k(f)$ are the Fourier coefficient of f with respect to U_k for $k = 0,1,\ldots$ in the sense of 22.1. (They exist by 30.4 so that $f(t) \sim \sum_{k=0}^{+\infty} c_k(f)\, U_k(t)$.)

4) g is of bounded variation on $[-1,1]$.

<u>Then</u> $\int_{x_0}^{x} f(t)\, g(t)dt = \sum_{k=0}^{+\infty} c_k(f) \int_{x_0}^{x} g(t)\, U_k(t)dt$ <u>for all</u> $x_0, x \in [-1,1]$.

<u>Proof</u>. Consider the functions

(1) $F(\varphi) = f(\cos\varphi)\sin\varphi$ for all $\varphi \in [0,2\pi]$

(2) $G(\varphi) = \begin{cases} g(\cos\varphi) & \text{for all } \varphi \in [0,\pi] \\ 0 & \text{for all } \varphi \in (\pi,2\pi]. \end{cases}$

By (1), 2) and 30.4,

(3) $F \in L(0,2\pi)$.

By (1), 2), 3) and 30.4,

(4) $\left\{ \begin{array}{l} c_k(f) \text{ coincide with the usual Fourier coefficients } b_{k+1} \text{ of } F \\ (k = 0,1,\ldots). \end{array} \right.$

Since, by (1), the periodic extension of F from $[0,2\pi]$ into $(-\infty,+\infty)$ with period 2π is an odd function

(5) the usual Fourier coefficients a_k of F vanish $(k = 0,1,\ldots)$.

By 4) and (2), G is of bounded variation on $[0,\pi]$, and being monotone on $[\pi,2\pi]$, also on $[\pi,2\pi]$. Therefore

(6) G is of bounded variation on $[0,2\pi]$.

Obviously $t = \cos\varphi$ is a one-to-one mapping of $[0,\pi]$ onto $[-1,1]$ so that,

(7) $\left\{ \begin{array}{l} \text{to each } x_0, x_1 \in [-1,1], \text{ there exist } \Phi_0, \Phi \in [0,\pi] \text{ such} \\ \text{that } x_0 = \cos \Phi_0, \ x = \cos \Phi, \text{ and are uniquely determined} \\ \text{by } x_0, x. \end{array} \right.$

Fixing any $x_0, x \in [-1,1]$ it follows from (3)-(7) by 28.5 that

(8) $$\int_{\Phi}^{\Phi_0} F(\varphi)\, G(\varphi)\, d\varphi = \sum_{k=0}^{+\infty} c_k(f) \int_{\Phi}^{\Phi_0} G(\varphi) \sin(k+1)\varphi \, d\varphi .$$

Finally, by (1), (2) and 30.3,

(9) $$\int_{\Phi}^{\Phi_0} F(\varphi)\, G(\varphi) d\varphi \overset{(1),(2)}{=} \int_{\Phi}^{\Phi_0} f(\cos\varphi)\, g(\cos\varphi) \sin\varphi \, d\varphi \overset{\substack{\cos\varphi = t \\ (7)}}{=} \overset{\substack{\cos\varphi = t \\ (7)}}{=} \int_{x_0}^{x} f(t)\, g(t) dt,$$

(10) $$\left\{ \begin{array}{l} \displaystyle\int_{\Phi}^{\Phi_0} G(\varphi) \sin(k+1)\varphi \, d\varphi \overset{(2)}{=} \int_{\Phi}^{\Phi_0} g(\cos\varphi) \sin(k+1)\varphi \, d\varphi \overset{30.3}{=} \\ \overset{30.3}{=} \displaystyle\int_{\Phi}^{\Phi_0} g(\cos\varphi)\, U_k(\cos\varphi) \sin\varphi \, d\varphi \overset{\substack{\cos\varphi = t \\ (7)}}{=} \\ \overset{\substack{\cos\varphi = t \\ (7)}}{=} \displaystyle\int_{x_0}^{x} g(t)\, U_k(t) dt \qquad \text{for} \quad k = 0,1,\ldots . \end{array} \right.$$

Setting (9), (10) into (8) we obtain the above formula.

5. Theorem. Suppose:

1) U_k is the standard conjugate Tchebysheff polynomial of degree k for $k = 0,1,\ldots$ (see 10.7).

2) $p \in (1,+\infty)$.

3) f is Lebesgue-measurable on $[-1,1]$,

$$\int_{-1}^{1} |f(t)|^p (1-t^2)^{\frac{1}{2}(p-1)} dt < +\infty.$$

4) $c_k(f)$ are the Fourier coefficients of f with respect to U_k for $k = 0,1,\ldots$ in the sense of 22.1. (They exist by 30.4 so that $f(t) \sim \sum_{k=0}^{+\infty} c_k(f)\, U_k(t)$.)

5) g is of bounded variation on $[-1,1]$.

Then

$$\int_{x_0}^{x} f(t)\, g(t)dt = \sum_{k=0}^{+\infty} c_k(f) \int_{x_0}^{x} g(t)\, U_k(t)dt \text{ for all } x_0, x \in [-1,1]$$

where the series on the right-hand side converges absolutely and uniformly for all $x_0, x \in [-1,1]$.

Proof is the same as in 1. with the exception of the following two steps.

Firstly, instead of the formula (3) in 4., we have, by (1) in 4., 3) and 30.4,

(3a) $F \in L^p(0,2\pi)$.

Secondly, instead of the formula (8) in 4., it follows from (3a) and (4)-(7) in 4. by 27.7 that

$$\int_{\Phi}^{\Phi_0} F(\varphi)\, G(\varphi)\, d\varphi = \sum_{k=0}^{+\infty} c_k(f) \int_{\Phi}^{\Phi_0} G(\varphi)\, \sin(k+1)\varphi\, d\varphi \tag{8a}$$

absolutely and uniformly for all $\Phi_0, \Phi \in [0,\pi]$.

Then the result may be derived analogously as in 4.

6. Theorem. Suppose:

1) $\operatorname{Re} z \in (0,+\infty)$.

2) U_k is the standard conjugate Tchebysheff polynomial of degree k for $k = 0,1,\ldots$ (see 10.7).

3) $\tilde{U}_k$ is a periodic extension of U_k from $[-1,1]$ into $[-1,+\infty)$ with period 2 $(k = 0,1,\ldots)$.

4) $f \in L(-1,1)$ with period 2.

5) $c_k(f)$ is the Fourier coefficient of f with respect to U_k for $k = 0,1,\ldots$ in the sense of 22.1. (They exist by 30.4, and $f(t) \sim \sum_{k=0}^{+\infty} c_k(f)\, U_k(t)$.)

Then

$$\int_0^{+\infty} f(t-1)e^{-zt}dt = \sum_{k=0}^{+\infty} c_k(f) \int_0^{+\infty} \tilde{U}_k(t-1)e^{-zt}\, dt.$$

Proof Follows from 4. in a similar fashion as 3. follows from 1.

7. Remark. All the results of this section are new.

§ 32. The term-by-term integration of a Fourier expansion of $f \notin L^2_w(-1,1)$ in terms of the standard Jacobi polynomials

1. The equiconvergence theorem. Suppose:

1) $\alpha,\beta \in (-1,+\infty)$, $-1 < X_1 < X_2 < 1$.

2) $f \in L_{(1-t)^\alpha(1+t)^\beta}(-1,1)$.

3) $\int_{-1}^{1} |f(t)|\,(1-t)^{\frac{1}{2}\alpha-\frac{1}{4}}\,(1+t)^{\frac{1}{2}\beta-\frac{1}{4}}\,dt < +\infty$.

4) $F(\varphi) = (1-\cos\varphi)^{\frac{1}{2}\alpha+\frac{1}{4}}\,(1+\cos\varphi)^{\frac{1}{2}\beta+\frac{1}{4}}\,f(\cos\varphi)$ for all $h\pi \neq \varphi \in (-\infty,+\infty)$.

Then the following holds:

I. The Fourier coefficients $c_k(f)$ of f with respect to the standard Jacobi polynomials $P_k^{(\alpha,\beta)}$ (see 10.1) in the sense of 22.1, i.e.

$$c_k(f) = \frac{1}{\|P_k^{(\alpha,\beta)}\|^2_{L^2_{(1-t)^\alpha(1+t)^\beta}(-1,1)}} \int_{-1}^{1} f(t)\,P_k^{(\alpha,\beta)}(t)\,(1-t)^\alpha(1+t)^\beta dt \quad (k = 0,1,\ldots$$

exist.

II. $F \in L(0,2\pi)$.

III. The n-th partial sum of the usual Fourier expansion of F is a function of $\cos\varphi$, say $S_n(\cos\varphi)$, for all $\varphi \in [0,2\pi]$, $n = 0,1,\ldots$.

IV. <u>If</u> $s_n(t)$ <u>is the</u> n-<u>th partial sum of the Fourier expansion of</u> f <u>in terms of</u> $P_k^{(\alpha,\beta)}$ <u>for all</u> $t \in [-1,1]$, $n = 1,2,\ldots,$ <u>then</u>

$$\lim_{n\to+\infty}\left[s_n(t) - \frac{S_n(t)}{(1-t)^{\frac{1}{2}\alpha+\frac{1}{4}}(1+t)^{\frac{1}{2}\beta+\frac{1}{4}}}\right] = 0$$

uniformly for all $t \in [X_1, X_2]$.

<u>Proof</u>. I. Follows from 2) and $|P_k^{(\alpha,\beta)}(t)| \leq M_k < +\infty$ for all $t \in [-1,1]$, $k = 0,1,\ldots$.

II. Follows from

$$\int_0^{2\pi} |F(\varphi)|\,d\varphi \overset{4)}{=} \int_0^{2\pi} \underbrace{(1-\cos\varphi)^{\frac{1}{2}\alpha+\frac{1}{4}}(1+\cos\varphi)^{\frac{1}{2}\beta+\frac{1}{4}}\,|f(\cos\varphi)|}_{\text{even f. with period } 2\pi}\,d\varphi$$

$$= 2\int_0^{\pi} (1-\cos\varphi)^{\frac{1}{2}\alpha+\frac{1}{4}}(1+\cos\varphi)^{\frac{1}{2}\beta+\frac{1}{4}}\,|f(\cos\varphi)|\,d\varphi = \left|\begin{array}{l} \cos\varphi = t \ (0 \leq \varphi \leq \pi) \\ \varphi = \arccos t \\ d\varphi = -\dfrac{dt}{\sqrt{1-t^2}} \end{array}\right. \quad \begin{array}{c|c} \varphi & t \\ \hline 0 & 1 \\ \pi & -1 \end{array}$$

$$= 2\int_{-1}^{1} \frac{(1-t)^{\frac{1}{2}\alpha+\frac{1}{4}}(1+t)^{\frac{1}{2}\beta+\frac{1}{4}}}{(1-t^2)^{\frac{1}{2}}}\,|f(t)|\,dt = 2\int_{-1}^{1} (1-t)^{\frac{1}{2}\alpha-\frac{1}{4}}(1+t)^{\frac{1}{2}\beta-\frac{1}{4}}\,|f(t)|\,dt \overset{3)}{<} +\infty.$$

III. Let T_k be the standard Tchebysheff polynomial of degree $k = 0,1,\ldots$ so that, by 30., $\cos k\varphi = T_k(\cos\varphi)$ for $k = 0,1,\ldots$ and all φ. Since, by 4), F is an even function of φ and, by II., $F \in L(0,2\pi)$, the n-th partial sum of the usual Fourier expansion of F is of the form

$$\sum_{k=0}^{n} a_k \cos k\varphi = \sum_{k=0}^{n} a_k T_k(\cos\varphi) = S_n(\cos\varphi) \quad \text{for all } \varphi, \text{ where}$$

$$S_n(t) = \sum_{k=0}^{n} a_k T_k(t) \quad \text{for all } t \quad (n = 0,1,\ldots).$$

IV. The proof of IV. is not difficult but very long, and therefore it will be omitted here. See Szegö (14), p. 239, 246-249.

2. Theorem. Suppose:

1) $\alpha,\beta \in (-1,+\infty)$.

2) $f \in L_{(1-t)^{\alpha}(1+t)^{\beta}}(-1,1)$.

3) $\int_{-1}^{1} |f(t)|\,(1-t)^{\frac{1}{2}\alpha-\frac{1}{4}}\,(1+t)^{\frac{1}{2}\beta-\frac{1}{4}}\,dt < +\infty$.

4) $P_k^{(\alpha,\beta)}$ is the standard Jacobi polynomial of degree k with indices α,β for $k = 0,1,\ldots$ (see 10.1).

5) $c_k(f)$ is the Fourier coefficient of f with respect to $P_k^{(\alpha,\beta)}$ in the sense of 22.1 for $k = 0,1,\ldots$.

(By 1., $c_k(f)$ exist so that $f(t) \sim \sum_{k=0}^{+\infty} c_k(f)\, P_k^{(\alpha,\beta)}(t)$.)

Then the following holds:

I. $\int_{x_0}^{x} f(t)\,dt$ exists for all $x_0, x \in (-1,1)$.

II. $\int_{x_0}^{x} f(t)\,dt = \sum_{k=0}^{+\infty} c_k(f) \int_{x_0}^{x} P_k^{(\alpha,\beta)}(t)\,dt$ for all $x_0, x \in (-1,1)$.

Proof. Without loss of generality we may suppose that $-1 < x_0 < x < 1$.

I. Obviously

$$\int_{x_0}^{x} |f(t)|\, dt = \int_{x_0}^{x} |f(t)|\, (1-t)^{\alpha}(1+t)^{\beta} \underbrace{\frac{1}{(1-t)^{\alpha}(1+t)^{\beta}}}_{\text{bounded}}\, dt \leq M \int_{x_0}^{x} |f(t)|\, (1-t)^{\alpha}(1+t)^{\beta} dt \overset{2)}{<} +\infty$$

II. Let $s_n(t)$ be the n-th partial sum of the Fourier expansion of f in the terms of $P_k^{(\alpha,\beta)}$ for all $t \in [-1,1]$, $n = 0,1,\ldots$. Let

$$(1) \qquad F(\varphi) = (1-\cos\varphi)^{\frac{1}{2}\alpha+\frac{1}{4}} (1+\cos\varphi)^{\frac{1}{2}\beta+\frac{1}{4}} f(\cos\varphi) \text{ for all } h\pi \neq \varphi \in (-\infty,+\infty)$$

so that, by 1.,

$$(2) \qquad F \in L(0,2\pi),$$

and the n-th partial sum of the usual Fourier expansion of F is a function of $\cos\varphi$, say $S_n(\cos\varphi)$, for all $\varphi \in [0,2\pi]$, $n = 0,1,\ldots$. Next, by 1.,

$$\lim_{n\to+\infty} \left[s_n(t) - \frac{S_n(t)}{(1-t)^{\frac{1}{2}\alpha+\frac{1}{4}}(1+t)^{\frac{1}{2}\beta+\frac{1}{4}}} \right] = 0$$

uniformly for all $t \in [x_0,x]$.

Hence

$$(3) \qquad \lim_{n\to+\infty} \left[\int_{x_0}^{x} s_n(t)dt - \int_{x_0}^{x} \frac{S_n(t)}{(1-t)^{\frac{1}{2}\alpha+\frac{1}{4}}(1+t)^{\frac{1}{2}\beta+\frac{1}{4}}}\, dt \right] = 0.$$

Since $-1 < x_0 < x < 1$ there exist Φ_0, Φ such that $0 < \Phi < \Phi_0 < \pi$, $x_0 = \cos \Phi_0$, $x = \cos \Phi$. Hence

$$\int_{x_0}^{x} \frac{S_n(t)}{(1-t)^{\frac{1}{2}\alpha+\frac{1}{4}}(1+t)^{\frac{1}{2}\beta+\frac{1}{4}}}\,dt = \left| \begin{array}{l} t = \cos\varphi \\ dt = -\sin\varphi\, d\varphi \\ \begin{array}{c|c} t & \varphi \\ \hline x_0 & \Phi_0 \\ x & \Phi \end{array} \end{array} \right| =$$

$$(4) \quad = \int_{\Phi}^{\Phi_0} \frac{\sin\varphi}{(1-\cos\varphi)^{\frac{1}{2}\alpha+\frac{1}{4}}(1+\cos\varphi)^{\frac{1}{2}\beta+\frac{1}{4}}}\, S_n(\cos\varphi)\, d\varphi = \int_{-\pi}^{\pi} S_n(\cos\varphi)\, G(\varphi)\, d\varphi$$

for $n = 0,1,\ldots,$

where

$$(5) \quad G(\varphi) = \begin{cases} \dfrac{\sin\varphi}{(1-\cos\varphi)^{\frac{1}{2}\alpha+\frac{1}{4}}(1+\cos\varphi)^{\frac{1}{2}\beta+\frac{1}{4}}} & \text{for all } \varphi \in [\Phi, \Phi_0], \\ 0 & \text{for all } \varphi \in [0, \Phi) \cup (\Phi_0, 2\pi]. \end{cases}$$

Since $S_n(\cos\varphi)$ are the partial sums of the usual Fourier expansion of F which, by (2), satisfies the condition $F \in L(0,2\pi)$ and, by (1), is of period 2π, and since, by (5), G is a function of bounded variation on $[-\pi,\pi]$ with period 2π, it follows from (4), 28.5, (1) and (5) that

$$\lim_{n\to+\infty} \int_{x_0}^{x} \frac{S_n(t)}{(1-t)^{\frac{1}{2}\alpha+\frac{1}{4}}(1+t)^{\frac{1}{2}\beta+\frac{1}{4}}}\,dt \overset{(4)}{=} \lim_{n\to+\infty} \int_{-\pi}^{\pi} S_n(\cos\varphi)\,G(\varphi)\,d\varphi \overset{28.5}{=}$$

$$\overset{28.5}{=} \int_{-\pi}^{\pi} F(\varphi)\,G(\varphi)\,d\varphi \overset{(1),(5)}{=} \int_{\Phi}^{\Phi_0} f(\cos\varphi)\,\sin\varphi\,d\varphi = \left|\begin{array}{c|c} \cos\varphi = t & \\ \sin\varphi\,d\varphi = -dt & \\ \varphi & t \\ \hline \Phi & \cos\Phi = x \\ \Phi_0 & \cos\Phi_0 = x_0 \end{array}\right| =$$

$$= \int_{x_0}^{x} f(t)\,dt.$$

Hence

$$(6) \qquad \lim_{n\to+\infty} \left[\int_{x_0}^{x} \frac{S_n(t)}{(1-T)^{\frac{1}{2}\alpha+\frac{1}{4}}(1+t)^{\frac{1}{2}\beta+\frac{1}{4}}}\,dt - \int_{x_0}^{x} f(t)\,dt \right] = 0.$$

Finally, by (3) and (6),

$$\lim_{n\to+\infty} \left[\int_{x_0}^{x} s_n(t)\,dt - \int_{x_0}^{x} f(t)\,dt \right] = 0,$$

which completes the proof.

<u>3. Lemma</u>. <u>Suppose</u>:

1) $\alpha,\beta \in (-1,+\infty)$, $p \in (1+\infty)$.

2) f <u>is Lebesgue-measurable on</u> $[-1,1]$,

$$\int_{-1}^{1} |f(t)|^p (1-t)^{(\frac{1}{2}\alpha+\frac{1}{4})p-\frac{1}{2}} (1+t)^{(\frac{1}{2}\beta+\frac{1}{4})p-\frac{1}{2}}\,dt < +\infty.$$

3) $$F(\varphi) = (1-\cos\varphi)^{\frac{1}{2}\alpha+\frac{1}{4}}(1+\cos\varphi)^{\frac{1}{2}\beta+\frac{1}{4}} f(\cos\varphi)$$

<u>for all</u> $0 \neq \varphi \in (-\pi,\pi)$.

<u>Then the following holds</u>:

I. $$\int_{-1}^{1} |f(t)|\,(1-t)^{\frac{1}{2}\alpha-\frac{1}{4}}(1+t)^{\frac{1}{2}\beta-\frac{1}{4}}\,dt < +\infty.$$

II. $F \in L^p(0,2\pi)$ <u>so that, by</u> 3.10, <u>also</u> $F \in L(0,2\pi)$.

<u>Proof</u> I. Let $\frac{1}{p}+\frac{1}{q}=1$. Then, by the Holder inequality with $w(t) = \frac{1}{\sqrt{1-t^2}}$ and 2),

$$\int_{-1}^{1} |f(t)|\,(1-t)^{\frac{1}{2}\alpha-\frac{1}{4}}(1+t)^{\frac{1}{2}\beta-\frac{1}{4}}\,dt = \int_{-1}^{1} |f(t)|\,(1-t)^{\frac{1}{2}\alpha+\frac{1}{4}}(1+t)^{\frac{1}{2}\beta+\frac{1}{4}}\,1\,\frac{dt}{\sqrt{1-t^2}} \overset{\text{Hölder}}{\leq}$$

$$\overset{\text{Hölder}}{\leq} \left[\int_{-1}^{1} |f(t)|^p\,(1-t)^{(\frac{1}{2}\alpha-\frac{1}{4})p}(1+t)^{(\frac{1}{2}\beta+\frac{1}{4})p}\,\frac{dt}{\sqrt{1-t^2}}\right]^{\frac{1}{p}} \left[\int_{-1}^{1} 1^q\,\frac{dt}{\sqrt{1-t^2}}\right]^{\frac{1}{q}} =$$

$$= \left[\int_{-1}^{1} |f(t)|^p\,(1-t)^{(\frac{1}{2}\alpha+\frac{1}{4})p-\frac{1}{2}}(1+t)^{(\frac{1}{2}\beta+\frac{1}{4})p-\frac{1}{2}}\,dt\right]^{\frac{1}{p}} \left[\int_{-1}^{1} \frac{dt}{\sqrt{1-t^2}}\right]^{\frac{1}{q}} \overset{2)}{<} +\infty.$$

II. By 3) and 2),

$$\int_0^{2\pi} |F(\varphi)|^p d\varphi \overset{3)}{=} \int_0^{2\pi} \underbrace{(1-\cos\varphi)^{(\frac{1}{2}\alpha+\frac{1}{4})p}(1+\cos\varphi)^{(\frac{1}{2}\beta+\frac{1}{4})p}|f(\cos\varphi)|^p}_{\text{even f. with period } 2\pi} d\varphi =$$

$$= 2\int_0^{\pi} (1-\cos\varphi)^{(\frac{1}{2}\alpha+\frac{1}{4})p}(1+\cos\varphi)^{(\frac{1}{2}\beta+\frac{1}{4})p} |f(\cos\varphi)|^p d\varphi =$$

$$\left| \begin{array}{ll} \cos\varphi = t & \begin{array}{c|c} \varphi & t \\ \hline 0 & 1 \\ \pi & -1 \end{array} \\ \varphi = \arccos t & \\ d\varphi = -\dfrac{dt}{\sqrt{1-t^2}} & \end{array} \right| = 2\int_{-1}^{1} |f(t)|^p (1-t)^{(\frac{1}{2}\alpha+\frac{1}{4})p-\frac{1}{2}}(1+t)^{(\frac{1}{2}\beta+\frac{1}{4})p-\frac{1}{2}} dt \overset{2)}{<}$$

$$\overset{2)}{<} +\infty.$$

<u>4. Theorem.</u> <u>Suppose:</u>

1) $\alpha,\beta \in (-1,+\infty)$, $p \in (1,+\infty)$.

2) $f \in L_{(1-t)^\alpha(1+t)^\beta}(-1,1)$.

3) $\displaystyle\int_{-1}^{1} |f(t)|^p (1-t)^{(\frac{1}{2}\alpha+\frac{1}{4})p-\frac{1}{2}}(1+t)^{(\frac{1}{2}\beta+\frac{1}{4})\pm-\frac{1}{2}} dt < +\infty.$

4) $P_k^{(\alpha,\beta)}$ <u>is the standard Jacobi polynomial of degree</u> k <u>with indices</u> α,β <u>for</u> $k = 0,1,\ldots$ (see 10.1).

5) $c_k(f)$ <u>is the Fourier coefficients of</u> f <u>with respect to</u> $P_k^{(\alpha,\beta)}$ <u>in the sense of</u> 22.1 <u>for</u> $k = 0,1,\ldots$.

(By 3. and 1., $c_k(f)$ exist so that $f(t) \sim \sum_{k=0}^{+\infty} c_k(f)\, P_k^{(\alpha,\beta)}(t)$.)

<u>Then the following holds:</u>

I. $\int_{x_0}^{x} f(t)dt$ <u>exists for all</u> $x_0, x \in (-1,1)$.

II. $\int_{x_0}^{x} f(t)dt = \sum_{k=0}^{+\infty} c_k(f) \int_{x_0}^{x} P_k^{(\alpha,\beta)}(t)dt$ <u>for all</u> $x_0, x \in (-1,1)$,

<u>where the series on the right-hand side converges uniformly for all</u> x_0, x <u>in any closed subinterval</u> $[X_1, X_2]$ <u>of</u> $(-1,1)$.

<u>Proof</u>. By I. in 3., all the assumptions of 2. are satisfied so that everything except the uniform convergence of the series in II. for all $x_0, x \in [X_1, X_2]$ follows from 2.

Let $s_n(t)$ be the n-th partial sum of the Fourier expansion of f in terms of $P_k^{(\alpha,\beta)}$ for all $t \in [-1,1]$, $n = 0,1,\ldots$. Let

(1) $$F(\varphi) = (1-\cos\varphi)^{\frac{1}{2}\alpha+\frac{1}{4}}(1+\cos\varphi)^{\frac{1}{2}\beta+\frac{1}{4}} f(\cos\varphi) \quad \text{for all } h\pi \neq \varphi \in (-\infty,+\infty)$$

so that, by 3. and 3.10,

(2) $$F \overset{3.}{\in} L^p(0,2\pi) \overset{3.10}{\subset} L(0,2\pi).$$

By I. in 3., all the assumptions of 1. are satisfied so that, by 1., the n-th partial sum of the usual Fourier expansion of F is a function of $\cos\varphi$, say $S_n(\cos\varphi)$, for all $\varphi \in [0,2\pi]$, $n = 0,1,\ldots$. Next, by 1) and 1.,

$$\lim_{n\to+\infty} \left[s_n(t) - \frac{S_n(t)}{(1-t)^{\frac{1}{2}\alpha+\frac{1}{4}}(1+t)^{\frac{1}{2}\beta+\frac{1}{4}}} \right] = 0$$

uniformly for all $t \in [X_1, X_2]$.

Consequently, given any $\varepsilon \in (0,+\infty)$, there exists n_0 such that

$$(3) \qquad \left| s_n(t) - \frac{S_n(t)}{(1-t)^{\frac{1}{2}\alpha+\frac{1}{4}}(1+t)^{\frac{1}{2}\beta+\frac{1}{4}}} \right| < \frac{1}{2}\varepsilon \quad \text{for all} \quad n > n_0,\ t \in [X_1,X_2] .$$

Hence

$$\left| \int_{X_1}^{x} s_n(t)dt - \int_{X_1}^{x} \frac{S_n(t)}{(1-t)^{\frac{1}{2}\alpha+\frac{1}{4}}(1+t)^{\frac{1}{2}\beta+\frac{1}{4}}} dt \right| \leq \int_{X_1}^{x} \left| s_n(t) - \frac{S_n(t)}{(1-t)^{\frac{1}{2}\alpha+\frac{1}{4}}(1+t)^{\frac{1}{2}\beta+\frac{1}{4}}} \right| dt$$

$$\overset{(3)}{\leq} \frac{1}{2}\varepsilon\,(x-X_1) \leq \frac{1}{2}\varepsilon\,(X_2-X_1) \overset{1)}{<} \varepsilon \quad \text{for all} \quad n > n_0,\ x \in [X_1,X_2],$$

so that

$$(4) \qquad \lim_{n\to+\infty} \left[\int_{X_1}^{x} s_n(t)dt - \int_{X_1}^{x} \frac{S_n(t)}{(1-t)^{\frac{1}{2}\alpha+\frac{1}{4}}(1+t)^{\frac{1}{2}\beta+\frac{1}{4}}} dt \right] = 0$$

uniformly for all $x \in [X_1,X_2]$.

Since $-1 < X_1 \leq x \leq X_2 < 1$ there exist Φ_1, Φ, Φ_2 such that $0 < \Phi_2 \leq \Phi \leq \Phi_1 < \pi$, $X_1 = \cos\Phi_1$, $x = \cos\Phi$, $X_2 = \cos\Phi_2$.

Consequently the function

$$(5) \qquad \left\{ \begin{array}{l} G(\varphi) = \begin{cases} \dfrac{\sin\varphi}{(1-\cos\varphi)^{\frac{1}{2}\alpha+\frac{1}{4}}(\cos\ )^{\frac{1}{2}\beta+\frac{1}{4}}} & \text{for all } \varphi \in [\Phi_2, \Phi_1], \\ 0 & \text{for all } \varphi \in [0, \Phi_2) \cup (\Phi_1, 2\pi] \end{cases} \\ \text{is of bounded variation on } [0,2\pi]. \end{array} \right.$$

Since $S_n(\cos\varphi)$ is the n-th partial sum of the usual Fourier expansion of F it follows from (2), (5) and 28.7 that

$$(6)\quad \begin{cases} \lim\limits_{n\to+\infty}\left[\displaystyle\int_{\Phi}^{\Phi_1} S_n(\cos\varphi)\, G(\varphi)\,d\varphi - \int_{\Phi}^{\Phi_1} F(\varphi)\, G(\varphi)\,d\varphi\right] = 0 \\ \text{uniformly for all } \Phi \in [\Phi_2, \Phi_1]. \end{cases}$$

But, by (5) and (1),

$$\begin{cases} \displaystyle\int_{\Phi}^{\Phi_1} S_n(\cos\varphi)\, G(\varphi)\,d\varphi \overset{(5)}{=} \int_{\Phi}^{\Phi_1} S_n(\cos\varphi)\, \frac{\sin\varphi}{(1-\cos\varphi)^{\frac{1}{2}\alpha+\frac{1}{4}}(1+\cos\varphi)^{\frac{1}{2}\beta+\frac{1}{4}}}\, d\varphi = \\ \displaystyle = \left| \begin{array}{c|c} \cos\varphi = t & \\ \sin\varphi\, d\varphi = -dt & \\ \hline \varphi & t \\ \hline \Phi & \cos\Phi = x \\ \Phi_1 & \cos\Phi_1 = X_1 \end{array} \right| = \int_{X_1}^{x} \frac{S_n(t)}{(1-t)^{\frac{1}{2}\alpha+\frac{1}{4}}(1+t)^{\frac{1}{2}\beta+\frac{1}{4}}}\, dt \quad \text{for all } \varphi \in [\Phi_2, \Phi_1], \\ \text{i.e. for all } x \in [X_1, X_2], \end{cases}$$

$$\begin{cases} \displaystyle\int_{\Phi}^{\Phi_1} F(\varphi)\, G(\varphi)\,d\varphi \overset{(1),(5)}{=} \int_{\Phi}^{\Phi_1} f(\cos\varphi)\sin\varphi\, d\varphi = \left| \begin{array}{c|c} \cos\varphi = t & \\ \sin\varphi\, d\varphi = -dt & \\ \hline \varphi & t \\ \hline \Phi & \cos\Phi = x \\ \Phi_1 & \cos\Phi_1 = X_1 \end{array} \right| = \int_{X_1}^{x} f(t)\,dt \\ \text{for all } \varphi \in [\Phi_2, \Phi_1], \text{ i.e. for all } x \in [X_1, X_2], \end{cases}$$

where the substitution $\cos\varphi = t$ is a one-to-one mapping of $[\Phi_2, \Phi_1]$ onto $[X_1, X_2]$. Therefore (6), (7) and (8) imply

$$(9)\quad \begin{cases} \lim\limits_{n\to+\infty}\left[\displaystyle\int_{X_1}^{x} \frac{S_n(t)}{(1-t)^{\frac{1}{2}\alpha+\frac{1}{4}}(1+t)^{\frac{1}{2}\beta+\frac{1}{4}}} - \int_{X_1}^{x} f(t)dt\right] = 0 \\ \text{uniformly for all } x \in [X_1, X_2]. \end{cases}$$

Finally, by (4) and (9),

$$(10)\qquad \int_{X_1}^{x} f(t)dt = \lim_{n\to+\infty} \int_{X_1}^{x} s_n(t)dt \quad \text{uniformly for all } x \in [X_1, X_2].$$

Writing x_0 instead of x in (10), and subtracting the two equations, we obtain

$$\int_{x_0}^{x} f(t)\,dt = \lim_{n\to+\infty} \int_{x_0}^{x} s_n(t)dt \quad \text{uniformly for all } x_0, x \in [X_1, X_2],$$

which completes the proof.

5. Remark. The result in 2. is due to Szegö (14) and (31). The results in 2.-4. are new.

§33. The term-by-term integration of the Fourier expansion of $f \notin L_w^2(0,+\infty)$ in terms of Laguerre polynomials

1. Theorem. Suppose:

1) $\delta \in (0,\pi)$.

2) $f \in L(0,2\pi)$ with period 2π.

3) $s_n(f;\ t)$ is the n-th partial sum of the usual Fourier expansion of f at t $(n = 0,1,\ldots)$.

Then

$$\lim_{n\to+\infty} \left[s_n(f;t) - \frac{1}{\pi} \int_{t-\delta}^{t+\delta} f(u) \frac{\sin n(t-u)}{t-u}\, dt \right] = 0$$

uniformly for all $t \in (-\infty,+\infty)$.

Proof may be found in textbooks concerning the ordinary Fourier series in connection with the Riemann localization theorem. (See for example Bary (2), vol. 1, p. 103.)

2. The equiconvergence theorem. Suppose:

1) $\alpha \in (-1,+\infty)$; $0 < X_1 < X_2 < +\infty$; $0 < \delta < \min(\pi, \sqrt{X_1})$.

2) f is Lebesgue-measurable on $[0,+\infty)$,

$$\int_0^1 t^\alpha |f(t)|\, dt < +\infty.$$

3) <u>Either</u> $\lim_{n\to+\infty} \sqrt{n} \int_n^{+\infty} t^{\frac{1}{2}\alpha-\frac{13}{12}} e^{-\frac{1}{2}t} |f(t)|\, dt = 0$

<u>or</u> $\int_1^{+\infty} t^{\frac{1}{2}\alpha-\frac{3}{4}} e^{-\frac{1}{2}t} |f(t)|\, dt < +\infty,$

$\lim_{n\to+\infty} n^{\frac{3}{2}} \int_n^{+\infty} t^{\alpha-2} e^{-t} |f(t)|\, dt = 0.$

4) $L_k^{(\alpha)}$ <u>is the standard Laguerre polynomial of degree</u> k <u>with index</u> α $(k = 0,1,\ldots)$.

<u>Then the following holds</u>:

I. <u>The Fourier coefficients</u> $c_k(f)$ <u>of the Fourier expansion of</u> f <u>with respect to</u> $L_k^{(\alpha)}$ <u>in the sense of</u> 22.1 <u>exist</u> $(k = 0,1,\ldots)$.

II. $\int_a^b |f(t)|\, dt < +\infty$, $\int_a^b |f(t^2)|\, dt < +\infty$ <u>for all</u> $0 < a < b < +\infty$.

III. <u>The</u> n-<u>th partial sum</u> $s_n(t)$ <u>of the Fourier expansion of</u> f <u>with respect to</u> $L_k^{(\alpha)}$ $(k = 0,1,\ldots)$ <u>at the point</u> t <u>satisfies the condition</u>

$$\lim_{n\to+\infty} \left[s_n(t) - \frac{1}{\pi} \int_{\sqrt{t}-\delta}^{\sqrt{t}+\delta} f(u^2) \frac{\sin 2\sqrt{n}\,(\sqrt{t}-u)}{\sqrt{t}-u}\, du \right] = 0$$

<u>uniformly for all</u> $t \in [X_1, X_2]$.

<u>Proof</u>. I. In 22.1, the Fourier coefficient $c_k(f)$ of f with respect to $L_k^{(\alpha)}$ was defined by the formula

$$(1)\quad c_k(f)=\frac{1}{\|L_k^{(\alpha)}\|^2_{L^2_{t^\alpha e^{-t}}(0,+\infty)}}\int_0^{+\infty} f(t)\,L_k^{(\alpha)}(t)\,t^\alpha e^{-t}\,dt \quad (k=0,1,\dots)$$

if the right-hand side is finite.

By 2),

$$(2)\quad \left\{\begin{array}{l} \left|\int_0^1 f(t)\,L_k^{(\alpha)}(t)\,t^\alpha e^{-t}\,dt\right| \le \int_0^1 t^\alpha\,|f(t)|\,\underbrace{|L_k^{(\alpha)}(t)|\,e^{-t}}_{\le M_k^{(\alpha)}<+\infty}\,dt \le M_k\int_0^1 t^\alpha\,|f(t)|\,dt \overset{2)}{<} \\ \\ \overset{2)}{<}+\infty \quad (k=0,1,\dots). \end{array}\right.$$

Let the first condition in 3) be satisfied. Then

$$(3)\quad \left\{\begin{array}{l} \left|\int_1^{+\infty} f(t)\,L_k^{(\alpha)}(t)\,t^\alpha e^{-t}\,dt\right| \le \int_1^{+\infty} |f(t)|\,|L_k^{(\alpha)}(t)|\,t^\alpha e^{-t}\,dt = \\ = \int_1^{+\infty} t^{\frac{1}{2}\alpha-\frac{13}{12}} e^{-\frac{1}{2}t}\,|f(t)|\,\underbrace{|L_k^{(\alpha)}(t)|\,t^{\frac{1}{2}\alpha+\frac{13}{12}} e^{-\frac{1}{2}t}}_{\overset{1)}{\le} M_k^{(\alpha)}<+\infty}\,dt \le \\ \le M_k^{(\alpha)}\int_1^{+\infty} t^{\frac{1}{2}\alpha-\frac{13}{12}} e^{-\frac{1}{2}t}\,|f(t)|\,dt \overset{3)}{<}+\infty \quad (k=0,1,\dots). \end{array}\right.$$

If the second condition in 3) is satisfied the same result may be derived writing $\frac{3}{4}$ instead of $\frac{13}{12}$ in (3). By (2) and (3), the expressions (1) are finite.

II. Without loss of generality we may suppose that $0 < a < 1 < b < +\infty$. Then, if the first condition in 3) is satisfied, we have

$$
(4)\quad \left\{
\begin{aligned}
&\int_a^b |f(t)|\,dt = \int_a^1 |f(t)|\,dt + \int_1^b |f(t)|\,dt = \\
&= \int_a^1 t^{\alpha} \underbrace{|f(t)|\frac{1}{t^{\alpha}}}_{\le M_a^{(\alpha)} < +\infty}\,dt + \int_1^b t^{\frac{1}{2}\alpha - \frac{13}{12}} e^{-\frac{1}{2}t} \underbrace{|f(t)|\, t^{-\frac{1}{2}\alpha + \frac{13}{12}} e^{\frac{1}{2}t}}_{\le M_b^{(\alpha)} < +\infty}\,dt \le \\
&\le M_a^{(\alpha)} \int_a^1 t^{\alpha} |f(t)|\,dt + M_b^{(\alpha)} \int_1^b t^{\frac{1}{2}\alpha - \frac{13}{12}} e^{-\frac{1}{2}t}\,dt \le \\
&\le M_a^{(\alpha)} \int_0^1 t^{\alpha} |f(t)|\,dt + M_b^{(\alpha)} \int_1^{+\infty} t^{\frac{1}{2}\alpha - \frac{13}{12}} e^{-\frac{1}{2}t} |f(t)|\,dt \overset{3)}{<} +\infty,
\end{aligned}
\right.
$$

$$
(5)\quad \left\{
\begin{aligned}
&\int_a^b |f(u^2)|\,du = \left|
\begin{array}{ll}
u^2 = t & \begin{array}{c|c} u & t \\ \hline a & a^2 \\ b & b^2 \end{array} \\
u = t^{\frac{1}{2}} & \\
du = \frac{1}{2}\frac{1}{t^{\alpha+\frac{1}{2}}}\,dt &
\end{array}
\right| = \frac{1}{2}\int_{b^2}^{b^2} \frac{|f(t)|}{t^{\frac{1}{2}}}\,dt = \frac{1}{2}\int_{a^2}^{1} \frac{|f(t)|}{t^{\frac{1}{2}}}\,dt + \\
&+ \frac{1}{2}\int_1^{b^2} \frac{|f(t)|}{t^{\frac{1}{2}}}\,dt = \frac{1}{2}\int_{a^2}^{1} t^{\alpha} \underbrace{|f(t)|\frac{1}{t^{\alpha+\frac{1}{2}}}}_{\le M_a^{(\alpha)} < +\infty}\,dt + \frac{1}{2}\int_1^{b^2} t^{\frac{1}{2}\alpha - \frac{13}{12}} e^{-\frac{1}{2}t} |f(t)| \underbrace{t^{-\frac{1}{2}\alpha + \frac{13}{12} - \frac{1}{2}} e^{\frac{1}{2}t}}_{\le M_b^{(\alpha)} < +\infty}\,dt \le \\
&\le \frac{1}{2} M_a^{(\alpha)} \int_{a^2}^{1} t^{\alpha} |f(t)|\,dt + \frac{1}{2} M_b^{(\alpha)} \int_1^{b^2} t^{\frac{1}{2}\alpha - \frac{13}{12}} e^{-\frac{1}{2}t} |f(t)|\,dt \le \\
&\le \frac{1}{2} M_a^{(\alpha)} \int_0^1 t^{\alpha} |f(t)|\,dt + \frac{1}{2} M_b^{(\alpha)} \int_1^{+\infty} t^{\frac{1}{2}\alpha - \frac{13}{12}} e^{-\frac{1}{2}t} |f(t)|\,dt \overset{3)}{<} +\infty.
\end{aligned}
\right.
$$

If the second condition in 3) is satisfied the same results may be derived writing $\frac{3}{4}$ instead of $\frac{13}{12}$ in (4) and (5).

III. The proof of III. is not difficult but very long, and therefore it will be omitted here. See Szegő (14), p. 239-240, 259-264.

3. Theorem. Suppose:

1) $\alpha \in (-1,+\infty)$.

2) f is Lebesgue-measurable on $[0,+\infty)$,

$$\int_0^1 t^{\alpha} |f(t)| \, dt < +\infty.$$

3) Either $\lim_{n\to+\infty} \sqrt{n} \int_n^{+\infty} t^{\frac{1}{2}\alpha - \frac{13}{12}} e^{-\frac{1}{2}t} |f(t)| \, dt = 0$

or $\int_1^{+\infty} t^{\frac{1}{2}\alpha - \frac{3}{4}} e^{-\frac{1}{2}t} |f(t)| \, dt < +\infty$,

$$\lim_{n\to+\infty} n^{\frac{3}{4}} \int_n^{+\infty} t^{\alpha-2} e^{-t} |f(t)| \, dt = 0.$$

4) $L_k^{(\alpha)}$ is the standard Laguerre polynomial of degree k with index α $(k = 0,1,\ldots)$.

(Consequently, by 2., the Fourier coefficients of f with respect to $L_k^{(\alpha)}$ in the sense of 22.1 exist for all $k = 0,1,\ldots$ so that

$$f(t) \sim \sum_{k=0}^{+\infty} c_k(f) \, L_k^{(\alpha)}(t).)$$

Then the following holds:

I. $\int_{x_0}^{x} f(t)\,dt$ <u>exists for all</u> $x_0, x \in (0,+\infty)$.

II. $$\int_{x_0}^{x} f(t)\,dt = \lim_{n\to+\infty} \sum_{k=0}^{n^2} c_k(f) \int_{x_0}^{x} L_k^{(\alpha)}(t)\,dt$$

<u>for all</u> $x_0, x \in (0,+\infty)$.

<u>Proof</u>. Fix any $x_0, x \in (0,+\infty)$. Without loss of generality we may suppose that $0 < x_0 < x < +\infty$.

I. Immediately follows from II. in 2.

II. Since $0 < x_0 < x < +\infty$ there exist a natural number p and a partition

$$(1)\quad \begin{cases} x_0 = a_0 < a_1 < \dots < a_p = x \text{ with } a_i - a_{i-1} \leq \frac{4}{3}\sqrt{a_0}\,\pi \\ \text{for } i = 1,2,\dots,p. \end{cases}$$

Fix any $i = 1,2,\dots,p$, and any δ such that

$$(2)\qquad 0 < \delta < \min\left(\frac{2\pi}{3}, \sqrt{a_0}\right).$$

Denoting the n-th partial sum of the Fourier expansion of f with respect to $L_k^{(\alpha)}$ $(k = 0,1,\dots)$ in the sense of 22.1 by s_n $(n = 0,1,\dots)$ it follows from 1. that

$$(3)\quad \begin{cases} \lim_{n\to+\infty} \left[s_{n^2}(t) - \frac{1}{\pi} \int_{\sqrt{t}-\delta}^{\sqrt{t}+\delta} f(u^2)\, \frac{\sin 2n(\sqrt{t}-u)}{\sqrt{t}-u}\,du \right] = 0 \\ \text{uniformly for all } t \in [a_{i-1}, a_i]. \end{cases}$$

The partial sum s_{n^2} is a polynomial and thus it is integrable over $[a_{i-1},a_i]$.

If we define the value of the function $\frac{\sin 2n(\sqrt{t}-u)}{\sqrt{t}-u}$ of t,u for $u=\sqrt{t}$, $t\in(0,+\infty)$, as $2n$, the function will be continuous for all $t\in(0,+\infty)$, $u\in(-\infty,+\infty)$, and thus bounded for all $u\in[\sqrt{t}-\delta,\ \sqrt{t}+\delta]$, $t\in[x_0,x]$. Since $0 \overset{(2)}{<} \sqrt{a_0}-\delta \overset{(1)}{\leq} \sqrt{a_{i-1}} \leq \sqrt{t}-\delta < \sqrt{t}+\delta \leq \sqrt{a_i}+\delta < +\infty$ it follows from II. in 2. that

$$\left|\frac{1}{\pi}\int_{\sqrt{t}-\delta}^{\sqrt{t}+\delta} f(u^2)\,\frac{\sin 2n(\sqrt{t}-u)}{\sqrt{t}-u}\,du\right| \leq \underbrace{\frac{M}{\pi}\int_{\sqrt{a_{i-1}}-\delta}^{\sqrt{a_i}+\delta} |f(u^2)|\,du}_{\text{independent of } t} \overset{\text{II. in 2.}}{<} +\infty$$

for all $t\in[a_{i-1},a_i]$

so that

(4) $\left\{\begin{array}{l}\text{the function } \frac{1}{\pi}\int_{\sqrt{t}-\delta}^{\sqrt{t}+\delta} f(u^2)\,\frac{\sin 2n(\sqrt{t}-u)}{\sqrt{t}-u}\,du \text{ of } t \text{ is integrable}\\ \qquad\text{over } [a_{i-1},a_i].\end{array}\right.$

Hence, by (3),

(5) $$\lim_{n\to+\infty}\left\{\int_{a_{i-1}}^{a_i} s_{n^2}(t)\,dt - \int_{a_{i-1}}^{a_i}\left[\frac{1}{\pi}\int_{\sqrt{t}-\delta}^{\sqrt{t}-\delta} f(u^2)\,\frac{\sin 2n(\sqrt{t}-u)}{\sqrt{t}-u}\,du\right]dt\right\} = 0.$$

In the sequel, it will be useful to set

(6) $$g(u) = f(u^2) \qquad \text{for all } u\in(0,+\infty).$$

By (1) and the mean value theorem, there exists $\xi_i \in [a_{i-1}, a_i]$ such that

$$(8)\quad \begin{cases} 0 \overset{(1)}{<} \sqrt{a_i} - \sqrt{a_{i-1}} \overset{\text{mean value th.}}{=} \dfrac{1}{2\sqrt{\xi_i}}(a_i - a_{i-1}) \overset{(1)}{\leq} \dfrac{1}{2\sqrt{a_0}}(a_i - a_{i-1}) \overset{(1)}{\leq} \\ \dfrac{1}{2\sqrt{a_0}} \dfrac{4}{3}\sqrt{a_0}\,\pi_V = \dfrac{2\pi}{3}. \end{cases}$$

Consider now the open interval $(\sqrt{a_{i-1}} - \delta - \eta_i, \sqrt{a_{i-1}} - \delta - \eta_i + 2\pi)$ on the u-axis, where $\eta_i \in (0, +\infty)$. If $0 < \eta_i < \underbrace{\sqrt{a_0} - \delta}_{>0 \text{ by } (2)}$, then $\eta_i \overset{(1)}{<} \sqrt{a_{i-1}} - \delta$, i.e. $0 < \sqrt{a_{i-1}} - \delta - \eta_i$, so that $[\sqrt{a_{i-1}} - \delta - \eta_i, \sqrt{a_{i-1}} - \delta - \eta_i + 2\pi_V] \subset$ $\subset (0, +\infty)$ for all small $\eta_i \in (0, +\infty)$. Hence, by (6) and II. in 2.,

$$(9)\quad \begin{cases} g \in L(\sqrt{a_{i-1}} - \delta - \eta_i, \sqrt{a_{i-1}} - \delta - \eta_i + 2\pi) \quad \text{for sufficiently small} \\ \eta_i \in (0, +\infty). \end{cases}$$

Next $\sqrt{a_i} - \sqrt{a_{i-1}} + 2\delta \overset{(8),(2)}{<} \dfrac{2\pi}{3} + \dfrac{4\pi}{3} = 2\pi$ so that $2\pi - (\sqrt{a_i} - \sqrt{a_{i-1}} + 2\delta) > 0$. Consequently if also $0 < 2\eta_i \leq 2\pi - (\sqrt{a_i} - \sqrt{a_{i-1}} + 2\delta)$ then the length $\sqrt{a_i} - \sqrt{a_{i-1}} + 2\delta + 2\eta_i$ of $(\sqrt{a_{i-1}} - \delta - \eta_i, \sqrt{a_i} + \delta + \eta_i)$ is $\leq 2\pi$. Hence

$$(10)\quad \begin{cases} [\sqrt{a_{i-1}}, \sqrt{a_i}] \subset \underbrace{(\sqrt{a_{i-1}} - \delta - \eta_i, \sqrt{a_i} + \delta + \eta_i)}_{\text{of length} \leq 2\pi} \subset \underbrace{(\sqrt{a_{i-1}} - \delta - \eta_i, \sqrt{a_{i-1}} - \delta - \eta_i + 2\pi)}_{\text{of length } 2\pi} \\ \text{for small } \eta_i \in (0, +\infty). \end{cases}$$

Finally,

$$(11)\quad \begin{cases} [\sqrt{t}-\delta,\ \sqrt{t}+\delta] \subset [\sqrt{a_{i-1}}-\delta,\ \sqrt{a_i}+\delta] \subset (\sqrt{a_{i-1}}-\delta-\eta_i,\ \sqrt{a_i}+\delta+\eta_i) \overset{(10)}{\subset} \\ \overset{(10)}{\subset} (\sqrt{a_{i-1}}-\delta-\eta_i,\ \sqrt{a_{i-1}}-\delta-\eta_i+2\pi) \text{ for small } \eta_i \in (0,+\infty) \\ \text{and all } t \in [a_{i-1},\ a_i]\ . \end{cases}$$

But now it follows from (6), (9), (10) and (11) by 1. that the 2n-th partial sum $S_{2n}(g;\sqrt{t})$ of the usual Fourier expansion of g on $(\sqrt{a_{i-1}}-\delta-\eta_i,\ \sqrt{a_{i-1}}-\delta-\eta_i+2\pi)$ at the point $\sqrt{t}$ satisfies the formula

$$(12)\quad \begin{cases} \lim\limits_{n\to+\infty}\left[\frac{1}{\pi}\int\limits_{\sqrt{t}-\delta}^{\sqrt{t}+\delta} f(u^2)\,\frac{\sin 2n(\sqrt{t}-u)}{\sqrt{t}-u}\,du - S_{2n}(g;\sqrt{t})\right] \overset{(6)}{=} \\ \overset{(6)}{=} \lim\limits_{n\to+\infty}\left[\frac{1}{\pi}\int\limits_{\sqrt{t}-\delta}^{\sqrt{t}+\delta} g(u)\,\frac{\sin 2n(\sqrt{t}-u)}{\sqrt{t}-u}\,du - S_{2n}(g;\sqrt{t})\right] \overset{(9),(10),(11),1.}{=} 0 \\ \text{uniformly for all } t \in [a_{i-1},\ a_i]\ . \end{cases}$$

Since $S_{2n}(g;\sqrt{t})$ are obviously integrable over $[a_{i-1},a_i]$, and (4) holds, we obtain from (12)

$$(13)\quad \lim_{n\to+\infty}\left\{\int\limits_{a_{i-1}}^{a_i}\left[\frac{1}{\pi}\int\limits_{\sqrt{t}-\delta}^{\sqrt{t}+\delta} f(u^2)\,\frac{\sin 2n(\sqrt{t}-u)}{\sqrt{t}-u}\,du\right]dt - \int\limits_{a_{i-1}}^{a_i} S_{2n}(g;\sqrt{t})\,dt\right\} = 0.$$

Finally the function

(14) $h(u) = 2u$ is of bounded variation on $\left[\sqrt{a_{i-1}}-\delta-\eta_i,\ \sqrt{a_{i-1}}-\delta-\eta_i+2\pi\right]$.

Since, by (10), $\left[\sqrt{a_{i-1}},\ \sqrt{a_i}\right] \subset \left(\sqrt{a_{i-1}}-\delta-\eta_i,\ \sqrt{a_{i-1}}-\delta-\eta_i+2\pi\right)$ for small $\eta_i > 0$ it follows from (9), (14), 28.5 and (6) that

$$\lim_{n\to+\infty} \int_{a_{i-1}}^{a_i} S_{2n}(g;\sqrt{t})dt = \left| \begin{array}{l} \sqrt{t} = u \\ t = u^2 \\ dt = 2u\,du \end{array} \quad \begin{array}{c|c} t & u \\ \hline a_{i-1} & \sqrt{a_{i-1}} \\ a_i & \sqrt{a_i} \end{array} \right| =$$

$$= \lim_{n\to+\infty} \int_{\sqrt{a_{i-1}}}^{\sqrt{a_i}} S_{2n}(g;u)\ 2u\,du \overset{(14)}{=} \lim_{n\to+\infty} \int_{\sqrt{a_{i-1}}}^{\sqrt{a_i}} S_{2n}(g;u)\,h(u)\,du =$$

$$\overset{(9),(14),28.5}{=} \int_{\sqrt{a_{i-1}}}^{\sqrt{a_i}} g(u)\,h(u)du \overset{(6),(14)}{=} \int_{\sqrt{a_{i-1}}}^{\sqrt{a_i}} f(u^2)\ 2u\,du =$$

$$= \left| \begin{array}{l} u^2 = t \\ 2u\,du = dt \end{array} \quad \begin{array}{c|c} u & t \\ \hline \sqrt{a_{i-1}} & a_{i-1} \\ \sqrt{a_i} & a_i \end{array} \right| = \int_{a_{i-1}}^{a_i} f(t)dt.$$

In other words,

$$\lim_{n\to+\infty} \left[\int_{a_{i-1}}^{a_i} S_{2n}(g;\sqrt{t})dt - \int_{a_{i-1}}^{a_i} f(t)dt \right] = 0. \tag{15}$$

But (5), (13) and (15) imply

$$\lim_{n\to+\infty} \left[\int_{a_{i-1}}^{a_i} s_{n^2}(t)dt - \int_{a_{i-1}}^{a_i} f(t)dt \right] = 0. \tag{16}$$

Summing the equations (16) for $i = 1,2,\ldots,p$, and using (1), we obtain

$$\lim_{n\to+\infty}\left[\int_{x_0}^{x} s_n^2(t)dt - \int_{x_0}^{x} f(t)dt\right] = 0,$$

whence the formula in II. follows readily.

<u>4. Theorem.</u> <u>Suppose</u>:

1) $\alpha \in (-1,+\infty)$.

2) f <u>is Lebesgue-measurable on</u> $[0,+\infty)$,

$$\int_0^1 t^{\alpha}\,|f(t)|\,dt < +\infty.$$

3) <u>Either</u> $\lim_{n\to+\infty} \sqrt{n} \int_n^{+\infty} t^{\frac{1}{2}\alpha-\frac{13}{12}}\, t^{-\frac{1}{2}t}\,|f(t)|\,dt = 0$

<u>or</u>
$$\begin{cases} \int_1^{+\infty} t^{\frac{1}{2}\alpha-\frac{3}{4}}\, e^{-\frac{1}{2}t}\,|f(t)|\,dt < +\infty, \\ \lim_{n\to+\infty} n^{\frac{3}{4}} \int_n^{+\infty} t^{\alpha-2}\, e^{-t}\,|f(t)|\,dt = 0. \end{cases}$$

4) $L_k^{(\alpha)}$ <u>is the standard Laguerre polynomial of degree</u> k with index α $(k = 0,1,\ldots)$.

(Consequently, by 2., the Fourier coefficients of f with respect to $L_k^{(\alpha)}$ in the sense of 22.1 exist for all $k = 0,1,\ldots$ so that $f(t) \sim \sum_{k=0}^{+\infty} c_k(f)\, L_k^{(\alpha)}(t)$.)

5) $p \in (1,+\infty)$, $\int_a^b |f(t)|^p \, dt < +\infty$ <u>for all</u> $0 < a < b < +\infty$.

<u>Then the following holds:</u>

I. $$\int_{x_0}^{x} f(t)dt = \lim_{n \to +\infty} \sum_{k=0}^{n^2} c_k(f) \int_{x_0}^{x} L_k^{(\alpha)}(t)dt$$

<u>for all</u> $x_0, x \in (0,+\infty)$.

II. <u>The series on the right-hand side of</u> I. <u>converges uniformly for all</u> x_0, x <u>in any bounded and closed subinterval</u> $[X_1, X_2]$ <u>of</u> $(0,+\infty)$.

<u>Proof</u>. I. Immediately follows from 3.

II. Fix any $[X_1, X_2] \subset (0,+\infty)$. Then there exists a natural number p and a partition

$$(1) \quad \begin{cases} X_1 = a_0 < a_1 < \dots < a_p = X_2 \text{ with } a_i - a_{i-1} \leq \frac{4}{3}\sqrt{X_1}\,\pi \\ \text{for } i = 1,2,\dots,p. \end{cases}$$

Next fix any $i = 1,2,\dots,p$, and any δ such that

$$(2) \qquad 0 < \delta < \min\left(\frac{2\pi}{3}, \sqrt{X_1}\right).$$

If $s_n(t)$ is the n-th partial sum of the Fourier expansion of f with respect to $L_k^{(\alpha)}$ $(k = 0,1,\dots)$ at the point t in the sense of 22.1 it follows from 1. that

$$\lim_{n\to+\infty}\left[s_{n^2}(t) - \frac{1}{\pi}\int_{\sqrt{t}-\delta}^{\sqrt{t}+\delta} f(u^2)\,\frac{\sin 2n\,(\sqrt{t}-u)}{\sqrt{t}-u}\,du \right] = 0$$

uniformly for all $t \in [a_{i-1}, a_i]$.

Consequently given any $\varepsilon \in (0,+\infty)$ there exists n_0 such that

$$(3)\quad \left\{ \begin{array}{l} \left| s_{n^2}(t) - \frac{1}{\pi}\int_{\sqrt{t}-\delta}^{\sqrt{t}+\delta} f(u^2)\,\frac{\sin 2n\,(\sqrt{t}-u)}{\sqrt{t}-u}\,du \right| < \frac{\varepsilon}{X_2 - X_1} \quad \text{for all} \\ \qquad n > n_0, \quad t \in [a_{i-1}, a_i] . \end{array} \right.$$

Similarly as in the proof of 3. we can show that both terms inside the absolute value sign on the left are integrable over $[a_{i-1}, a_i]$. Hence, by (3) and (1),

$$\left| \int_{a_{i-1}}^{x} s_{n^2}(t)dt - \int_{a_{i-1}}^{x} \left[\frac{1}{\pi}\int_{\sqrt{t}-\delta}^{\sqrt{t}+\delta} f(u^2)\,\frac{\sin 2n\,(\sqrt{t}-u)}{\sqrt{t}-u}\,du \right] dt \right| \leq$$

$$\leq \int_{a_{i-1}}^{x} \left| s_{n^2}(t) - \frac{1}{\pi}\int_{\sqrt{t}-\delta}^{\sqrt{t}+\delta} f(u^2)\,\frac{\sin 2n\,(\sqrt{t}-u)}{\sqrt{t}-u}\,du \right| dt \overset{(3)}{\leq} \frac{x-a_{i-1}}{X_2-X_1} \leq$$

$$\leq \frac{a_i-a_{i-1}}{X_2-X_1}\,\varepsilon < \varepsilon \qquad \text{for all } n > n_0,\ x \in [a_{i-1}, a_i] ,$$

so that

$$(4)\quad \left\{ \begin{array}{l} \lim_{n\to+\infty} \left\{ \int_{a_{i-1}}^{x} s_{n^2}(t)dt - \int_{a_{i-1}}^{x} \left[\frac{1}{\pi}\int_{\sqrt{t}-\delta}^{\sqrt{t}+\delta} f(u^2)\,\frac{\sin 2n\,(\sqrt{t}-u)}{\sqrt{t}-u}\,du \right] dt \right\} = 0 \\ \qquad \text{uniformly for all } x \in [a_{i-1}, a_i] . \end{array} \right.$$

Next by (5) and 5),

$$\int_a^b |g(u)|^p\,du \overset{(5)}{=} \int_a^b |f(u^2)|^p\,du = \left| \begin{array}{ll} u^2 = t & \begin{array}{c|c} u & t \\ \hline a & a^2 \\ b & b^2 \end{array} \\ u = t^{\frac{1}{2}} & \\ du = \frac{1}{2}\frac{dt}{t^{\frac{1}{2}}} & \end{array} \right| =$$

(9)
$$= \frac{1}{2}\int_{a^2}^{b^2} \frac{|f(t)|^p}{t^{\frac{1}{2}}}\,dt \le \frac{1}{2a}\int_{a^2}^{b^2} |f(t)|^p\,dt \overset{5)}{<} +\infty$$

for all $0 < a < b < +\infty$.

Besides the function

(10) $h(u) = 2u$ is of bounded variation on $\left[\sqrt{a_{i-1}}-\delta-\eta_i,\ \sqrt{a_{i-1}}-\delta-\eta_i+2\pi\right]$.

Since, by (6), $\left[\sqrt{a_{i-1}},\ \sqrt{a_i}\right] \subset \left(\sqrt{a_{i-1}}-\delta-\eta_i,\ \sqrt{a_{i-1}}-\delta-\eta_i+2\pi\right)$ it follows from (9), (10), 28.7 and (5) that

$$\lim_{n\to+\infty} \int_{a_{i-1}}^{x} S_{2n}(g;\sqrt{t})\,dt = \left| \begin{array}{ll} \sqrt{t} = u & \begin{array}{c|c} t & u \\ \hline a_{i-1} & \sqrt{a_{i-1}} \\ x & \sqrt{x} \end{array} \\ t = u^2 & \\ dt = 2u\,du & \end{array} \right| =$$

$$= \lim_{n\to+\infty} \int_{\sqrt{a_{i-1}}}^{\sqrt{x}} S_{2n}(g;u)\,2u\,du \overset{(10)}{=} \lim_{n\to+\infty} \int_{\sqrt{a_{i-1}}}^{\sqrt{x}} S_{2n}(g;u)\,h(u)\,du =$$

$$\overset{(9),(10),28.7}{=} \int_{\sqrt{a_{i-1}}}^{\sqrt{x}} g(u)\,h(u)\,du \overset{(5),(10)}{=} \int_{\sqrt{a_{i-1}}}^{\sqrt{x}} f(u^2)\,2u\,du =$$

$$= \left| \begin{array}{ll} u^2 = t & \begin{array}{c|c} u & t \\ \hline \sqrt{a_{i-1}} & a_{i-1} \\ \sqrt{x} & x \end{array} \\ 2u\,du = dt & \end{array} \right| = \int_{a_{i-1}}^{x} f(t)\,dt \quad \text{uniformly for all } x \in [a_{i-1}, a_i]$$

Now set

$$(5) \qquad g(u) = f(u^2) \qquad \text{for all } u \in (0,+\infty).$$

Similarly as in the proof of 3. we can show that, for sufficiently small $\eta_i > 0$, we have

$$(6) \quad \begin{cases} \left[\sqrt{a_{i-1}}-\delta-\eta_i,\ \sqrt{a_{i-1}}-\delta-\eta_i+2\pi\right] \subset (0,+\infty), \\ g \in L\left(\sqrt{a_{i-1}}-\delta-\eta_i,\ \sqrt{a_{i-1}}-\delta-\eta_i+2\pi\right), \\ \left[\sqrt{a_{i-1}},\ \sqrt{a_i}\right] \subset \left(\sqrt{a_{i-1}}-\delta-\eta_i,\ \sqrt{a_{i-1}}-\delta-\eta_i+2\pi\right), \\ \left[\sqrt{t}-\delta,\ \sqrt{t}+\delta\right] \subset \left(\sqrt{a_{i-1}}-\delta-\eta_i,\ \sqrt{a_{i-1}}-\delta-\eta_i+2\pi\right) \text{ for all } t \in \left[a_{i-1},a_i\right], \end{cases}$$

so that, by (5), (6) and 1., the 2n-th partial sum $S_{2n}(g;\sqrt{t})$ of the usual Fourier expansion of f on $\left(\sqrt{a_{i-1}}-\delta-\eta_i,\ \sqrt{a_{i-1}}-\delta-\eta_i+2\pi\right)$ at the point $\sqrt{t}$ satisfies the formula

$$\lim_{n\to+\infty}\left[\frac{1}{\pi}\int_{\sqrt{t}-\delta}^{\sqrt{t}+\delta} f(u^2)\,\frac{\sin 2n\,(\sqrt{t}-u)}{\sqrt{t}-u}\,du - S_{2n}(g;\sqrt{t})\right] =$$

$$= \lim_{n\to+\infty}\left[\frac{1}{\pi}\int_{\sqrt{t}-\delta}^{\sqrt{t}+\delta} g(u)\,\frac{\sin 2n\,(\sqrt{t}-u)}{\sqrt{t}-u}\,du - S_{2n}(g;\sqrt{t})\right] = 0 \quad \text{uniformly}$$

for all $t \in \left[a_{i-1},a_i\right]$.

Consequently, given any $\varepsilon \in (0,+\infty)$, there exists n_0 such that

$$(7)\quad \begin{cases} \left| \dfrac{1}{\pi} \displaystyle\int_{\sqrt{t}-\delta}^{\sqrt{t}+\delta} f(u^2) \dfrac{\sin 2n(\sqrt{t}-u)}{\sqrt{t}-u}\, du - S_{2n}(g;\sqrt{t}) \right| < \dfrac{\varepsilon}{X_2-X_1} \\ \text{for all } n > n_0,\ t \in [a_{i-1},a_i]. \end{cases}$$

Since we already know that the first term inside the absolute value sign is integrable with respect to t over $[a_i,a_{i-1}]$, and so obviously is the second term, it follows that

$$\left| \int_{a_{i-1}}^{x} \left[\frac{1}{\pi} \int_{\sqrt{t}-\delta}^{\sqrt{t}+\delta} f(u^2) \frac{\sin 2n(\sqrt{t}-u)}{\sqrt{t}-u}\, du \right] dt - \int_{a_{i-1}}^{x} S_{2n}(g;\sqrt{t})\,dt \right| \leq$$

$$\leq \int_{a_{i-1}}^{x} \left| \frac{1}{\pi} \int_{\sqrt{t}-\delta}^{\sqrt{t}+\delta} f(u^2) \frac{\sin 2n(\sqrt{t}-u)}{\sqrt{t}-u}\, du - S_{2n}(g;\sqrt{t}) \right| dt \overset{(7)}{\leq} \frac{x-a_{i-1}}{X_2-X_1}\,\varepsilon \leq$$

$$\leq \frac{a_i-a_{i-1}}{X_2-X_1}\,\varepsilon \overset{(1)}{<} \varepsilon \qquad \text{for all } n > n_0,\ x \in [a_i,a_{i-1}].$$

Hence

$$(8)\quad \begin{cases} \lim\limits_{n\to+\infty} \left\{ \displaystyle\int_{a_{i-1}}^{x} \left[\frac{1}{\pi} \int_{\sqrt{t}-\delta}^{\sqrt{t}+\delta} f(u^2) \frac{\sin 2n(\sqrt{t}-u)}{\sqrt{t}-u}\, du \right] dt - \right. \\ \left. - \displaystyle\int_{a_{i-1}}^{x} S_{2n}(g;\sqrt{t})\,dt \right\} = 0 \qquad \text{uniformly for all } x \in [a_{i-1},a_i]. \end{cases}$$

In other words,

$$(11)\quad \begin{cases} \lim\limits_{n\to+\infty} \left[\int\limits_{a_{i-1}}^{x} S_n(g;\sqrt{t})dt - \int\limits_{a_{i-1}}^{x} f(t)dt \right] = 0 \\ \text{uniformly for all } x \in \left[a_{i-1}, a_i\right]. \end{cases}$$

Summing (4), (8) and (11) we obtain

$$(12)\quad \begin{cases} \lim\limits_{n\to+\infty} \left[\int\limits_{a_{i-1}}^{x} s_{n^2}(t)dt - \int\limits_{a_{i-1}}^{x} f(t)dt \right] = 0 \\ \text{uniformly for all } x \in \left[a_{i-1}, a_i\right]. \end{cases}$$

Finally fix any $k = 1,2,\ldots,p$. Then, by (12),

$$(13)\quad \begin{cases} \lim\limits_{n\to+\infty} \left[\int\limits_{a_{i-1}}^{a_i} s_{n^2}(t)dt - \int\limits_{a_{i-1}}^{a_i} f(t)dt \right] = 0 \quad \text{for } i = 1,2,\ldots,k-1, \\ \lim\limits_{n\to+\infty} \left[\int\limits_{a_{k-1}}^{x} s_{n^2}(t)dt - \int\limits_{a_{k-1}}^{x} f(t)dt \right] = 0 \quad \text{uniformly for} \\ \text{all } x \in \left[a_{k-1}, a_k\right]. \end{cases}$$

Summing the formulae (13), and using (1), we obtain

$$\lim_{n\to+\infty} \left[\int\limits_{X_1}^{x} s_{n^2}(t)dt - \int\limits_{X_1}^{x} f(t)dt \right] = 0 \quad \text{uniformly for}$$

$$\text{all } x \in \left[a_{k-1}, a_k\right].$$

Since k may be any of the numbers $1,2,\ldots,p$ it follows from (1) that

$$\lim_{n\to+\infty}\left[\int_{X_1}^{x} s_{n^2}(t)dt - \int_{X_1}^{x} f(t)dt\right] = 0 \quad \text{uniformly for} \tag{14}$$

$$\text{all } x \in [X_1, X_2].$$

Writing x_0 instead of x in (14), and then subtracting the two equations we obtain

$$\lim_{n\to+\infty}\left[\int_{x_0}^{x} s_{n^2}(t)dt - \int_{x_0}^{x} f(t)dt\right] = 0 \quad \text{uniformly for}$$

$$\text{all } x_0, x \in [X_1, X_2],$$

whence the result easily follows.

5. Remark. The result in 2. is due to Szego (14) and (30). For a different approach see Mückenhaupt (28). The results in 3.-4. are new.

§ 34. The term-by-term integration of the Fourier expansion of $f \notin L^2_{e^{-t^2}}(-\infty,+\infty)$ in terms of Hermite polynomials

1. The equiconvergence theorem. Suppose:

1) $-\infty < T_1 < T_2 < +\infty, \quad \delta \in (0,\pi).$

2) $f \in L(-T,T)$ for all $T \in (0,+\infty)$.

3) Either $\lim\limits_{n\to+\infty} n \int\limits_n^{+\infty} \frac{1}{t^{\frac{5}{3}}} e^{-\frac{1}{2}t^2} \left[|f(t)| + |f(-t)| \right] dt = 0,$

or
$$\begin{cases} \int\limits_1^{+\infty} \frac{1}{t} e^{-\frac{1}{2}t^2} \left[|f(t)| + |f(-t)| \right] dt < +\infty, \\ \lim\limits_{n\to+\infty} n^3 \int\limits_n^{+\infty} \frac{1}{t^4} e^{-t^2} \left[|f(t)|^2 + |f(-t)|^2 \right] dt = 0. \end{cases}$$

4) H_k is the standard Hermite polynomial of degree k $(k = 0,1,\ldots)$.

Then the following holds:

I. The Fourier coefficients $c_k(f)$ of f with respect to H_k in the sense of 22.1 exist $(k = 0,1,\ldots)$.

II. The n-th partial sum $S_n(t)$ of the Fourier expansion of f with respect to H_k $(k,n = 0,1,\ldots)$ at the point t satisfies the condition

$$\lim_{n\to+\infty}\left[\, s_n(t) - \frac{1}{\pi}\int_{t-\delta}^{t+\delta} f(u)\,\frac{\sin\sqrt{2n}\,(t-u)}{t-u}\,du\,\right] = 0$$

<u>uniformly for all</u> $t \in [T_1, T_2]$.

<u>Proof</u>. I. In 22.1, the Fourier coefficient $c_k(f)$ of f with respect to H_k was defined by the formula

$$(1)\qquad c_k(f) = \frac{1}{\|H_k\|^2_{L^2_{e^{-t^2}}(-\infty,+\infty)}}\int_{-\infty}^{+\infty} f(t)\,H_k(t)e^{-t^2}\,dt \quad (k = 0,1,\ldots).$$

if the right-hand side is finite.

By 2),

$$(2)\qquad \left\{\begin{aligned} &\left|\int_{-n}^{n} f(t)\,H_k(t)e^{-t^2}\,dt\right| \le \int_{-n}^{n} |f(t)|\,\underbrace{|H_k(t)|}_{\le M_{k,n} < +\infty}e^{-t^2}\,dt \le \\ &\le M_{k,n}\int_{-n}^{n} |f(t)|\,dt \overset{2)}{<} +\infty \quad (n = 1,2,\ldots). \end{aligned}\right.$$

Let the first condition in 3) be satisfied. Then

$$(3)\qquad \left\{\begin{aligned} &\int_{n}^{+\infty} f(t)\,H_k(t)\,e^{-t^2}dt \qquad \int_{n}^{+\infty} |f(t)|\,|H_k(t)|\,e^{-t^2}\,dt = \\ &\int_{n}^{+\infty} \frac{1}{t^{\frac{5}{3}}}\,e^{-\frac{1}{2}t^2}\,|f(t)|\,\underbrace{|H_k(t)|\,t^{\frac{5}{3}}\,e^{-\frac{1}{2}t^2}}_{\le M_{k,n} < +\infty}\,dt \le M_{k,n}\int_{n}^{+\infty} \frac{1}{t^{\frac{5}{3}}}\,e^{-\frac{1}{2}t^2}\,|f(t)|\,dt \le \\ &\le M_{k,n}\int_{n}^{+\infty} \frac{1}{t^{\frac{5}{3}}}\,e^{-\frac{1}{2}t^2}\left[\,|f(t)| + |f(-t)|\,\right]dt \overset{3)}{<} +\infty \quad \text{for } k = 0,1,\ldots, \text{ and} \\ &\text{large } n = 1,2,\ldots \ . \end{aligned}\right.$$

Similarly

$$(4) \qquad \left| \int_{-\infty}^{-n} f(t)\, H_k(t)\, e^{-t^2}\, dt \right| < +\infty \quad \text{for } k = 0,1,\ldots \text{ and large } n = 1,2,\ldots$$

By (2), (3) and (4), the expressions (1) are finite.

If the second condition in 3) is satisfies then writing $\frac{1}{t}$ instead of $\frac{1}{t^{\frac{5}{3}}}$ we verify the inequalities (3) and (4) quite similarly so that, by (2),(3) and (4), the expressions (1) are again finite.

II. The proof of II. is not difficult but very long, and therefore it will be omitted here. See Szegö (14), p. 240. and 259-264.

<u>2. Theorem.</u> <u>Suppose</u>:

1) $-\infty < T_1 < T_2 < +\infty$.

2) $f \in L(-T,T)$ <u>for all</u> $T \in (0,+\infty)$.

3) <u>Either</u>

$$\lim_{n \to +\infty} n \int_n^{+\infty} \frac{1}{t^{\frac{5}{3}}}\, e^{-\frac{1}{2}t^2} \left[|f(t)| + |f(-t)| \right] dt = 0$$

$$\int_1^{+\infty} \frac{1}{t}\, e^{-\frac{1}{2}t^2} \left[|f(t)| + |f(-t)| \right] dt < +\infty,$$

<u>or</u>

$$\lim_{n \to +\infty} n^3 \int_n^{+\infty} \frac{1}{t^4}\, e^{-t^2} \left[|f(t)|^2 + |f(-t)|^2 \right] dt = 0.$$

4) H_k <u>is the standard Hermite polynomial of degree</u> k $(k = 0,1,\ldots)$.

(Consequently, by 1., the Fourier coefficients $c_k(f)$ of f with respect to H_k in the sense of 22.1 exist for $k = 0,1,\ldots$ so that $f(t) \sim \sum_{k=0}^{+\infty} c_k(f)\, H_k(t)$.)

<u>Then</u>

$$(1)\quad \begin{cases} \displaystyle\int_{x_0}^{x} f(t)dt = \lim_{n\to+\infty} \sum_{k=0}^{2n^2} c_k(t) \int_{x_0}^{x} H_k(t)dt \quad \underline{\text{uniformly for all}} \\ x_0, x \in [T_1, T_2]. \end{cases}$$

<u>Proof</u>. By 1), there exist a natural number p and a partition

$$(2)\qquad T_1 = a_0 < a_1 < \ldots < a_p = T_2 \quad \text{with} \quad a_i - a_{i-1} \leq \frac{2\pi}{3} \quad \text{for all} \quad i = 1,2,\ldots,$$

Fix any $i = 1,2,\ldots,p$; $\varepsilon \in (0,+\infty)$, $\delta \in (0, \frac{2\pi}{3})$, $n = 0,1,\ldots$, and denote the n-th partial sum of the Fourier expansion of f with respect to H_k $(k = 0,1,\ldots)$ by s_n. According to 1.,

$$\lim_{n\to+\infty} \left[s_{2n^2}(t) - \frac{1}{\pi} \int_{t-\delta}^{t+\delta} f(u) \frac{\sin 2n\,(t-u)}{t-u}\, du \right] = 0$$

uniformly for all $t \in [a_{i-1}, a_i]$.

Consequently there exists n_1 such that

$$(3)\quad \begin{cases} \left| s_{2n^2}(t) - \dfrac{1}{\pi} \displaystyle\int_{t-\delta}^{t+\delta} f(u) \frac{\sin 2n\,(t-u)}{t-u}\, du \right| < \dfrac{\varepsilon}{a_i - a_{i-1}} \\ \text{for all } t \in [a_{i-1}, a_i],\ n > n_1. \end{cases}$$

The partial sum s_{2n^2} is a polynomial and thus integrable over any bounded interval. If we define the value of the function $\frac{\sin 2n\,(t-u)}{t-u}$ of t,u for $t = u$ as $2n$ the function will be continuous for all t,u and thus bounded in any bounded two-dimensional interval. This fact and 2) imply that the function of t

$$(4) \qquad \frac{1}{\pi} \int_{t-\delta}^{t+\delta} f(u)\, \frac{\sin 2n\,(t-u)}{t-u}\, du$$

is bounded and thus integrable in any bounded interval. Hence, by (3),

$$\left| \int_{a_{i-1}}^{x} s_{2n^2}(t)\, dt - \int_{a_{i-1}}^{x} \left[\frac{1}{\pi} \int_{t-\delta}^{t+\delta} f(u)\, \frac{\sin 2n\,(t-u)}{t-u}\, du \right] dt \right| \leq$$

$$\leq \int_{a_{i-1}}^{x} \left| s_{2n^2}(t) - \frac{1}{\pi} \int_{t-\delta}^{t+\delta} f(u)\, \frac{\sin 2n\,(t-u)}{t-u}\, du \right| dt \overset{(3)}{\leq} \frac{\varepsilon}{a_i - a_{i-1}} (x-a_{i-1}) \leq \varepsilon$$

$$\text{for all } x \in [a_{i-1}, a_i]\ ,\ n > n_1,$$

so that

$$(5) \left\{ \begin{array}{l} \lim\limits_{n \to +\infty} \left\{ \int_{a_{i-1}}^{x} s_{2n^2}(t)dt - \int_{a_{i-1}}^{x} \left[\frac{1}{\pi} \int_{t-\delta}^{t+\delta} f(u)\, \frac{\sin 2n\,(t-u)}{t-u}\, du \right] dt \right\} = 0 \\ \\ \text{uniformly for } x \in [a_{i-1}, a_i]\,. \end{array} \right.$$

Observe now that $(a_{i-1} - \frac{2\pi}{3}\,,\ a_{i-1} + \frac{4\pi}{3})$ is an open interval of length 2π, and, by (2), $[a_{i-1}, a_i] \subset (a_{i-1} - \frac{2\pi}{3}\,,\ a_{i-1} + \frac{4\pi}{3})$.

Consequently, by 2) and 33.1, the n-th partial sums $S_n(f;t)$ of the usual Fourier expansion of f in $(a_{i-1} - \frac{2\pi}{3}, a_{i-1} + \frac{4\pi}{3})$ satisfy the condition

$$\lim_{n \to +\infty} \left[\frac{1}{\pi} \int_{t-\delta}^{t+\delta} f(u) \frac{\sin 2n\,(t-u)}{t-u}\, du - S_{2n}(f;\, t) \right] = 0$$

uniformly for all $t \in [a_{i-1}, a_i]$.

Therefore then exists n_2 such that

$$(6) \quad \begin{cases} \left| \frac{1}{\pi} \int_{t-\delta}^{t+\delta} f(u) \frac{\sin 2n\,(t-u)}{t-u}\, du - S_{2n}(f;t) \right| < \frac{\varepsilon}{a_i - a_{i-1}} \\ \text{for all } t \in [a_{i-1}, a_i], \quad n > n_2. \end{cases}$$

Since we have already proved that the function (4) of t is integrable over any bounded interval and s_{2n} is a trigonometric polynomial, it follows from (6) that

$$\left| \int_{a_{i-1}}^{x} \left[\frac{1}{\pi} \int_{t-\delta}^{t+\delta} f(u) \frac{\sin 2n\,(t-u)}{t-u}\, du \right] dt - \int_{a_{i-1}}^{x} S_{2n}(f;t)\,dt \right| \leq$$

$$\leq \int_{a_{i-1}}^{x} \left| \frac{1}{\pi} \int_{t-\delta}^{t+\delta} f(u) \frac{\sin 2n\,(t-u)}{t-u}\, du - S_{2n}(f;t) \right| dt \overset{(6)}{\leq} \frac{\varepsilon}{a_i - a_{i-1}} (x - a_{i-1}) \leq \varepsilon$$

for all $x \in [a_{i-1}, a_i]$, $n > n_2$,

so that

$$(7)\quad \begin{cases} \lim\limits_{n\to+\infty} \left\{ \displaystyle\int_{a_{i-1}}^{x} \left[\frac{1}{\pi} \int_{t-\delta}^{t+\delta} f(u) \frac{\sin 2n\,(t-u)}{t-u}\, du \right] dt - \int_{a_{i-1}}^{x} S_{2n}(f;t)dt \right\} = 0 \\ \text{uniformly for } x \in \left[a_{i-1}, a_i \right]. \end{cases}$$

Finally, by the well-known theorem concerning the term-by-term integration of the usual Fourier series,

$$(8)\quad \begin{cases} \lim\limits_{n\to+\infty} \left[\displaystyle\int_{a_{i-1}}^{x} S_{2n}(f;t)dt - \int_{a_{i-1}}^{x} f(t)dt \right] = 0 \text{ uniformly for} \\ \text{all } x \in \left[a_{i-1}, a_i \right]. \end{cases}$$

Summing (5), (7) and (8) we obtain

$$(9)\quad \begin{cases} \lim\limits_{n\to+\infty} \left[\displaystyle\int_{a_{i-1}}^{x} s_{2n^2}(t)dt - \int_{a_{i-1}}^{x} f(t)dt \right] = 0 \text{ uniformly for} \\ \text{all } x \in \left[a_{i-1}, a_i \right] \quad (i = 1,2,\ldots,p). \end{cases}$$

Now fix any $k = 1,2,\ldots,p$. Then, by (9),

$$(10)\quad \begin{cases} \lim\limits_{n\to+\infty} \left[\displaystyle\int_{a_{i-1}}^{a_i} s_{2n^2}(t)dt - \int_{a_{i-1}}^{a_i} f(t)dt \right] = 0 \quad \text{for } i = 1,2,\ldots,k-1, \\ \lim\limits_{n\to+\infty} \left[\displaystyle\int_{a_{k-1}}^{x} s_{2n^2}(t)dt - \int_{a_{k-1}}^{x} f(t)dt \right] = 0 \quad \text{uniformly for} \\ \text{all } x \in \left[a_{k-1}, a_k \right]. \end{cases}$$

Summing the equations (10) we obtain

$$\lim_{n\to+\infty}\left[\int_{a_0}^{x} s_{2n^2}(t)dt - \int_{a_0}^{x} f(t)dt\right] = 0 \quad \text{uniformly for}$$

$$\text{all } x \in [a_{k-1}, a_k] \quad (k = 1,2,\ldots,p).$$

Hence, by (2),

$$\lim_{n\to+\infty}\left[\int_{T_1}^{x} s_{2n^2}(t)dt - \int_{T_1}^{x} f(t)dt\right] = 0 \quad \text{uniformly for}$$

$$\text{all } x \in [T_1, T_2] .$$

Writing (11) for x_0 instead of x, and subtracting the two equations, we finally obtain

$$\lim_{n\to+\infty}\left[\int_{x_0}^{x} s_{2n^2}(t)dt - \int_{x_0}^{x} f(t)dt\right] = 0 \quad \text{uniformly for}$$

$$\text{all } x_0, x \in [T_1, T_2],$$

whence (1) follows.

3. Remark. The result in 1. is due to Szegö (14). A different approach may be found in recent papers by Antosik and Mikusiński (18) or Mückenhaupt (28). The result in 2. is new.

§ 35. Some special properties of the standard Legendre polynomials

1. Theorem. Let P_k be the standard Legendre polynomial of degree k $(k = 0,1,\ldots)$ (see 10.1 and 10.3). The the following holds:

I. $P_k(1) = 1$ for $k = 0,1,\ldots$.

II. $|P_k(t)| \leq 1$ for all $t \in [-1,1]$, $k = 0,1,\ldots$.

Proof. By 13.5, given any complex t there exists a spherical neighborhood $U_t(0)$ of 0 in the z-plane such that

$$(1) \qquad \frac{1}{\sqrt{1-2tz+z^2}} = \sum_{k=0}^{+\infty} P_k(t)\, z^k \qquad \text{for all} \quad z \in U_t(0),$$

where $\sqrt{w}$ is the principal value of the square root.

In particular, choosing $t = 1$ there exists a spherical neighborhood $U_1(0)$ of 0 in the z-plane such that

$$(2) \qquad \frac{1}{1-z} = \frac{1}{\sqrt{1-2z+z^2}} = \sum_{k=0}^{+\infty} P_k(1)\, z^k \qquad \text{for all} \quad z \in U_1(0).$$

On the other hand we have

$$(3) \qquad \frac{1}{1-z} = \sum_{k=0}^{+\infty} z^k \qquad \text{for all} \quad |z| < 1.$$

Since, by a well-known theorem, the coefficients of a power expansion of a holomorphic function in a spherical neighborhood of a given point are uniquely determined it follows from (2) and (3) that

$$(4) \qquad P_k(1) = 1 \qquad \text{for} \qquad k = 0,1,\ldots,$$

which proves I.

Next fix any $t \in [-1,1]$. Then there exists a unique $\varphi \in [0,\pi]$ such that $t = \cos\varphi$. Hence $1-2tz+z^2 = 1-2z\cos\varphi + z^2 = (1-ze^{i\varphi})(1-ze^{-i\varphi})$ for all complex z. Since $\mathrm{Re}(1-ze^{\pm i\varphi}) = 1-z\cos\varphi > 0$ for all $z \in (-1,1)$ it follows from the well-known properties of the principal values of the square roots that

$$(5) \quad \begin{cases} \dfrac{1}{\sqrt{1-2tz+z^2}} = \dfrac{1}{\sqrt{(1-ze^{i\varphi})(1-ze^{-i\varphi})}} = \dfrac{1}{\sqrt{1-ze^{i\varphi}}\,\sqrt{1-ze^{-i\varphi}}} = \\[2ex] = (1-ze^{i\varphi})^{-\frac{1}{2}}(1-ze^{-i\varphi})^{-\frac{1}{2}} \qquad \text{for all } z \in (-1,1). \end{cases}$$

Since, by the binomial expansion

$$(6) \quad \begin{cases} (1-ze^{i\varphi})^{-\frac{1}{2}} = \displaystyle\sum_{k=0}^{+\infty} (-1)^k \binom{-\frac{1}{2}}{k} z^k e^{ik\varphi} = \sum_{k=0}^{+\infty} a_k z^k e^{ik\varphi} = \sum_{k=0}^{+\infty} A_k \\[2ex] (1-ze^{-i\varphi})^{-\frac{1}{2}} = \displaystyle\sum_{k=0}^{+\infty} (-1)^k \binom{-\frac{1}{2}}{k} z^k e^{-ik\varphi} = \sum_{k=0}^{+\infty} a_k z^k e^{-ik\varphi} = \sum_{k=0}^{+\infty} B_k \\[2ex] \qquad \text{for all } z \in (-1,1), \end{cases}$$

where the series on the right-hand sides converge absolutely for all $z \in (-1,1)$, it follows from (5) and (6) and the theorem about a product of two absolutely convergent series that

$$(7)\quad \begin{cases} \dfrac{1}{\sqrt{1-2tz+z^2}} \overset{(5),(6)}{=} \displaystyle\sum_{k=0}^{+\infty} A_k \sum_{\ell=0}^{+\infty} B_\ell = \sum_{k=0}^{+\infty} \left(\sum_{\ell=0}^{k} A_{k-\ell} B_\ell \right) = \\ = \displaystyle\sum_{k=0}^{+\infty} \left[\sum_{\ell=0}^{k} a_{k-\ell} z^{k-\ell} e^{i(k-\ell)\varphi} \cdot a_\ell z^\ell e^{-i\ell\varphi} \right] = \\ = \displaystyle\sum_{k=0}^{+\infty} \left[\sum_{\ell=0}^{k} a_{k-\ell} a_\ell e^{i(k-2\ell)} \right] z^k \quad \text{for all } z \in (-1,1). \end{cases}$$

At the same time, by (1),

$$(8)\qquad \frac{1}{\sqrt{1-2tk+z^2}} = \sum_{k=0}^{+\infty} P_k(t) z^k = \sum_{k=0}^{+\infty} P_k(\cos\varphi) z^k \quad \text{for all } z \in U_t(0).$$

Since, by a well-known theorem, the coefficients of a power expansion of a function in a real neighborhood of a given real point are uniquely determined, it follows from (7) and (8) that

$$(9)\qquad P_k(t) = P_k(\cos\varphi) = \sum_{\ell=0}^{k} a_{k-\ell} a_\ell e^{i(k-2\ell)} \qquad \text{for } k = 0,1,\ldots .$$

By (6), $a_k = (-1)^k \binom{-\frac{1}{2}}{k}$ for $k = 0,1,\ldots$, i.e. $a_0 = 1$, $a_k = \dfrac{1.3.5. \ldots (2k-1)}{2.4.6. \ldots (2k)}$ for $k = 1,2,\ldots$, so that

(10) $\qquad a_k > 0 \qquad \text{for} \quad k = 0,1,\ldots \ .$

By (9), (10) and I.,

$$|P_k(t)| = |P_k(\cos\varphi)| \overset{(9),(10)}{\leq} \sum_{\ell=0}^{k} a_{k-\ell}\, a_\ell \overset{(9)}{=} P_k(\cos 0) = P_k(1) \overset{I.}{=} 1$$

for $k = 0,1,\ldots,$

which completes the proof of II.

<u>2. Theorem</u>. <u>Suppose</u>:

1) p <u>is a positive integer</u>.

2) f <u>has an absolutely continuous</u> p-<u>th derivative on</u> $[0,2\pi]$.

3) f <u>is of period</u> 2π.

4) $c_k(f) = \frac{1}{2\pi} \int_0^{2\pi} f(t)\, e^{-ikt}\, dt$ <u>for</u> $k = 0, \pm 1, \ldots$.

5) $s_n(f;t) = \sum_{k=-n}^{n} c_k(f)\, e^{ikt}$ <u>for all</u> $t \in [0,2\pi]$, $n = 0,1,\ldots$

<u>Then the following holds</u>:

I. $\quad c_k(f) = \underset{|k| \to +\infty}{o}\left(\frac{1}{k^{p+1}}\right)$.

II. $\quad \max_{0 \leq t \leq 2\pi} |f(t) - s_n(f;t)| = \underset{n \to +\infty}{o}\left(\frac{1}{n^p}\right)$.

<u>Proof</u>. By 2) and 3), f is a continuous function of bounded variation on $[0,2\pi]$ and period 2π, so that, by 4), 5) and the Jordan test for the ordinary Fourier series,

(1) $$f(t) = \sum_{k=-\infty}^{+\infty} c_k(f)\, e^{ikt} \qquad \text{for all} \quad t \in [0,2\pi].$$

By 2) and the theorem about primitive functions

(2) $$f^{(p+1)} \in L(0,2\pi).$$

Consequently, in the formula 4), we may integrate (p+1)-times by parts. In view of 3) we obtain

(3) $$c_k(f) = \frac{1}{2\pi} \frac{1}{(ik)^{p+1}} \int_0^{2\pi} f^{(p+1)}(t) e^{-ikt}\, dt \quad \text{for} \quad k = \pm 1, \pm 2, \ldots$$

Since the functions e^{ikt} for $k = 0, \pm 1, \ldots$ form an orthogonal system on $(0,2\pi)$ with respect to the weight function $w(t) = 1$ for all $t \in (0,2\pi)$, and $\| e^{ikt} \|^2_{L^2(0,2\pi)} = 2\pi$ for $k = 0, \pm 1, \ldots,$ it follows from (2) and the Mercer theorem 22.2 that

(4) $$\lim_{|k| \to +\infty} \int_0^{2\pi} f^{(p+1)}(t)\, e^{-ikt}\, dt = 0.$$

By (3) and (4),

(5) $$\lim_{|k| \to +\infty} k^{p+1} c_k(f) = 0,$$

which proves I. By (5), given any $\varepsilon \in (0,+\infty)$ there exists $k_0 \in (0,+\infty)$ such that

(6) $$|c_k(f)| < \frac{1}{2}\,\frac{\varepsilon}{|k|^{p+1}} \qquad \text{for all} \quad |k| > k_0 .$$

Consequently, by (1), 5), (6) and 1),

$$|f(t) - s_n(f;t)| \overset{(1),5)}{=} \Big| \sum_{|k|>n} c_k(f)\, e^{ikt} \Big| \overset{(6)}{<} \varepsilon \sum_{k=n+1}^{+\infty} \frac{1}{k^{p+1}} < \varepsilon \int_n^{+\infty} \frac{1}{t^{p+1}}\, dt =$$

$$= \frac{1}{p}\,\frac{1}{n^p}\,\varepsilon \leq \varepsilon \qquad \text{for all} \quad t \in [0,2\pi] \quad \text{and} \quad n > k_0,$$

whence II. follows.

3. Theorem. Suppose:

1) p is a positive integer.

2) f has an absolutely continuous p-th derivative on $[-1,1]$.

Then there exist functions $p_0, p_1, \ldots$ with the following properties:

I. p_n is a polynomial of degree $\leq n$ $(n = 0,1,\ldots)$.

II. $$\max_{-1 \leq t \leq 1} |f(t) - p_n(t)| = \underset{n \to +\infty}{o}\left(\frac{1}{n^p}\right).$$

Proof. By 2), we may define

(1) $$F(\varphi) = f(\cos\varphi) \quad \text{for all} \quad \varphi \in (-\infty, +\infty).$$

By (1), 1), 2) and the chain rule, $F^{(p)}(\varphi)$ is a polynomial in $\sin\varphi$, $\cos\varphi$, $f'(\cos\varphi), \ldots, f^{(p)}(\cos\varphi)$. But $\sin\varphi$ and $\cos\varphi$ are absolutely continuous on $[0,2\pi]$ and, by 2), $f(t), f'(t), \ldots, f^{(p)}(t)$ are absolutely continuous on $[-1,1]$. Next a function composed of two absolutely continuous functions

is absolutely continuous, and a linear combination or a product of absolutely continuous functions is absolutely continuous. Therefore

$$F^{(p)}(\varphi) \text{ is absolutely continuous on } [0,2\pi] .$$

Moreover, by (1), F is of period 2π. Consequently setting

$$(2) \qquad c_k(F) = \frac{1}{2\pi} \int_0^{2\pi} F(\varphi)\, e^{-ik\varphi}\, d\varphi \qquad \text{for } k = 0, \pm 1, \ldots,$$

$$(3) \qquad S_n(F;\varphi) = \sum_{k=n}^{n} c_k(F)\, e^{ik\varphi} \qquad \text{for all } \varphi \in [0,2\pi] ,\ n = 0,1,\ldots,$$

it follows from 2. that

$$(4) \qquad \max_{0 \leq \varphi \leq 2\pi} \left| F(\varphi) - s_n(F;\varphi) \right| = \underset{n \to +\infty}{o} \left(\frac{1}{n^p} \right) .$$

Since, by (1), F is an even function with period 2π we have, in view of (2),

$$(5) \qquad c_k(F) \overset{(2)}{=} \frac{1}{2\pi} \int_0^{2\pi} F(\varphi) \cos k\varphi\, d\varphi \overset{(2)}{=} c_{-k}(F) \qquad \text{for } k = 0, \pm 1, \ldots$$

Let T_k be the standard Tchebysheff polynomial of degree k $(k = 0,1,\ldots)$ (see 10.4) so that, by 29.1,

$$(6) \qquad \cos k\varphi = T_k(\cos \varphi) \qquad \text{for all } \varphi \in (-\infty, +\infty),\ k = 0,1,\ldots .$$

Then, by (3), (5) and (6),

$$(7)\quad \begin{cases} s_n(F;\varphi) \overset{(3)}{=} c_0(F) + \sum_{k=1}^{n} \left[c_k(F)e^{ik\varphi} + c_{-k}(F)e^{-ik\varphi} \right] \overset{(5)}{=} \\ \overset{(5)}{=} c_0(F) + \sum_{k=1}^{n} c_k(F)\,(e^{ik\varphi} + e^{-ik\varphi}) = c_0(F) + 2\sum_{k=1}^{n} c_k(F)\cos k\varphi \overset{(6)}{=} \\ \overset{(6)}{=} c_0(F) + 2\sum_{k=1}^{n} c_k(F)\,T_k(\cos\varphi) \quad \text{for all} \quad \varphi\in[0,2\pi]\,,\ n = 0,1,\ldots\ . \end{cases}$$

Set

$$(8)\qquad p_n(t) = c_0(F) + 2\sum_{k=1}^{n} c_k(F)\,T_k(t) \quad \text{for all} \quad t \in (-\infty,+\infty),\ n = 0,1,\ldots\ .$$

By (7) and (8),

$$(9)\qquad p_n = \text{a polynomial of degree} \leq n \quad (n = 0,1,\ldots),$$

$$(10)\qquad s_n(F;\varphi) = p_n(\cos\varphi) \quad \text{for all} \quad \varphi\in[0,2\pi]\,,\ n = 0,1,\ldots\ .$$

Finally given any $t \in [-1,1]$ there exists at least one $\varphi\in[0,2\pi]$ such that $t = \cos\varphi$ so that, by (1) and (10),

$$(11)\quad \begin{cases} F(\varphi) - s_n(F;\varphi) \overset{(1),(10)}{=} f(\cos\varphi) - p_n(\cos\varphi) = f(t) - p_n(t) \\ \qquad \text{for} \quad n = 0,1,\ldots\ . \end{cases}$$

Conversely, given any $\varphi \in [0,2\pi]$ we have $t = \cos\varphi \in [-1,1]$, and (1), (10) again imply (11). Hence by (4)

$$(12) \qquad \max_{-1 \le t \le 1} |f(t) - p_n(t)| = \max_{0 \le \varphi \le 2\pi} |F(\varphi) - s_n(F;\varphi)| \overset{(4)}{=} \underset{n \to +\infty}{o}\left(\frac{1}{n^p}\right).$$

But (9) and (12) prove I. and II.

<u>4. Theorem</u>. <u>Suppose</u>:

1) P_k <u>is the standard Legendre polynomial of degree</u> k $(k = 0,1,\ldots)$ (see 10.1, 10.3!).

2) f <u>has an absolutely continuous second derivative on</u> $[-1,1]$.

3) $c_k(f)$ <u>is the Fourier coefficient of</u> f <u>with respect to</u> P_k $(k = 0,1,\ldots)$ (see 1.16 and 3.9) <u>so that</u> $f(t) \sim \sum_{k=0}^{+\infty} c_k(f)\, P_k(t)$.

<u>Then</u>

$$\sum_{k=0}^{+\infty} c_k(f)\, P_k(t) \ \underline{\text{converges to}}\ f(t) \ \underline{\text{uniformly for all}}\ t \in [-1,1].$$

<u>Proof</u>. By 2) and 3., there exist functions $p_0, p_1, \ldots$ with the following properties:

(1) p_m is a polynomial of degree $\le m$ $(m = 0,1,\ldots)$,

$$(2) \qquad M_m = \max_{-1 \le t \le 1} |f(t) - p_m(t)| = \underset{m \to +\infty}{o}\left(\frac{1}{m^2}\right).$$

Let $c_k(p_m)$ be the Fourier coefficient of p_m with respect to P_k for all $k,m = 0,1,\ldots,$ and $s_n(f;t)$, $s_n(p_m;t)$ the n-th partial sums of the Fourier expansions of f, p_m in terms of the standard Legendre polynomials for all $m,n = 0,1,\ldots$. Obviously

$$(3)\quad \begin{cases} f(t) - s_n(f;t) = \left[f(t) - p_n(t)\right] - \left[s_n(f;t) - p_n(t)\right] \\ \text{for all } t \in [-1,1], \quad n = 0,1,\ldots \ . \end{cases}$$

By (1), 1) and 5.1, given any $n = 0,1,\ldots$ there exists an $(n+1)$-tuple $a_{n,0}, a_{n,1}, \ldots, a_{n,n}$ such that

$$(4)\qquad p_n(t) = \sum_{k=0}^{n} a_{n,k} P_k(t) \qquad \text{for all } n = 0,1,\ldots, \text{ and all } t.$$

Therefore, by 1.20,

$$(5)\qquad c_k(p_n) = \left\{ \begin{array}{ll} a_{n,k} & \text{for } k = 0,1,\ldots,n \\ 0 & \text{for } k = n+1, n+2,\ldots \end{array} \right\} \quad (n = 0,1,\ldots).$$

so that, by (4) and (5),

$$(6)\quad \begin{cases} p_n(t) \overset{(4),(5)}{=} \sum_{k=0}^{n} c_k(p_n) P_k(t) = s_n(p_n;t) \quad \text{for all } t \in [-1,1], \\ n = 0,1,\ldots \ . \end{cases}$$

Consequently, by (6), 1.16 and 3.9,

$$(7)\quad \begin{cases} s_n(f;t) - p_n(t) \overset{(6)}{=} s_n(f;t) - s_n(p_n;t) = \sum_{k=0}^{n} \left[c_k(f) - c_k(p_n) \right] P_k(t) = \\ \overset{1.16,3.12}{=} \sum_{k=0}^{n} \dfrac{1}{\| P_k \|^2_{L^2(-1,1)}} \int_{-1}^{1} \left[f(\tau) - p_n(\tau) \right] P_k(\tau) d\tau \cdot P_k(t) \\ \text{for all } t \in [-1,1], \quad n = 0,1,\ldots \ . \end{cases}$$

By 10.3,

$$(8)\qquad \| P_k \|^2_{L^2(-1,1)} = \frac{2}{2k+1} \qquad \text{for} \quad k = 0,1,\ldots \ .$$

By 1.,

$$(9)\qquad |P_k(t)| \leq 1 \quad \text{for all} \quad t \in [-1,1], \quad k = 0,1,\ldots \ .$$

Using (2), (8) and (9) to estimate (7) we obtain

$$(10)\quad \begin{cases} |s_n(f;t) - p_n(t)| \overset{(7),(8),(9)}{\leq} \sum_{k=0}^{n} \dfrac{2k+1}{2} \int_{-1}^{1} |f(\tau) - p_n(\tau)| \, d\tau \overset{(2)}{\leq} \\ \overset{(2)}{\leq} \sum_{k=0}^{n} \dfrac{2k+1}{2} \, 2 M_n = M_n \sum_{k=0}^{n} (2k+1) = M_n (n+1) \dfrac{1+(2n+1)}{2} = (n+1)^2 M_n \\ \text{for all } t \in [-1,1], \quad n = 0,1,\ldots \ . \end{cases}$$

By (3), (2) and (10),

$$(11)\quad \begin{cases} |f(t) - s_n(f;t)| \overset{(3)}{\leq} |f(t) - p_n(t)| + |s_n(f;t) - p_n(t)| \overset{(2),(10)}{\leq} \\ \overset{(2),(10)}{\leq} M_n + (n+1)^2 M_n = \left[1+(n+1)^2 \right] M_n = \left[\dfrac{1}{n^2} + (1+\dfrac{1}{n})^2 \right] n^2 M_n \\ \text{for all } t \in [-1,1], \ n = 1,2,\ldots \end{cases}$$

Since $\lim_{n \to +\infty} \left[\frac{1}{n^2} + (1+\frac{1}{n})^2 \right] = 1$ and, by (2), $\lim_{n \to +\infty} n^2 M_n = 0$ the result follows from (11).

5. Remark. All the results of this section are known results and in various books one can find different proofs of them. The simple proof of 4. we have given here is due to my teacher, the late Professor Jarník of the university of Prague.

§ 36. The term-by-term Laplace transformation of a Fourier expansion of $f \in L(-1,1)$ in terms of the standard Legendre polynomials

1. Theorem. Suppose:

1) $\operatorname{Re} z \in (0,+\infty)$.

2) P_k is the standard Legendre polynomial of degree k $(k = 0,1,\ldots)$ (see 10.1 and 10.3!).

3) $\tilde{P}_k$ is a periodic extension of P_k from $(-1,1)$ into $[-1,+\infty)$ with period 2 $(k = 0,1,\ldots)$.

4) $f \in L(-1,1)$ with period 2.

5) $$c_k(f) = \frac{1}{\| P_k \|^2_{L^2(-1,1)}} \int_{-1}^{1} f(t)\, P_k(t)dt \quad \text{for } k = 0,1,\ldots .$$

(By 2) and 4), $c_k(f)$ are finite for $k = 0,1,\ldots$ and, by 22.1, $f(t) \sim \sum_{k=0}^{+\infty} c_k(f)\, P_k(t)$.)

Then

$$\int_0^{+\infty} f(t-1)\, e^{-zt}\, dt = \sum_{k=0}^{+\infty} c_k(f) \int_0^{+\infty} \tilde{P}_k(t-1)\, e^{-zt}\, dt.$$

Proof. By 5.3, 10.1 and 10.3, $P_0, P_1, \ldots$ is a real-valued orthogonal system on $(-1,1)$ with respect to the weight-function $w(t) = 1$ for all $t \in (-1,1)$, and $0 < \| P_k \|^2_{L^2(0,1)} < +\infty$ for $k = 0,1,\ldots$.

Next, the function e^{-zt} of t has an absolutely continuous second derivative on $[-1,1]$ so that, by 35.4, its Fourier expansion in terms of $P_0, P_1, \ldots$ converges to e^{-zt} uniformly for all $t \in [-1,1]$. Consequently all the assumptions of 23.3 are satisfied if we define h as a sufficiently large constant on $[-1,1]$, so that the above formula follows from 23.3.

2. Remark. The preceding result is new.

CHAPTER 5.:

A representation in terms of Laplace integrals

§ 37. Auxiliary results

1. Theorem. Suppose:

1) f is a Lebesgue-measurable function on $[0,+\infty)$.

2) $\int_0^{+\infty} f(t)\, e^{-z_0 t}\, dt$ exists for some complex z_0.

Then the following holds:

I. $\int_0^{+\infty} f(t)\, e^{-zt} dt$ exists for all z with $\operatorname{Re} z \in [\operatorname{Re} z_0, +\infty)$.

II. $\lim\limits_{\operatorname{Re} z \to +\infty} \int_0^{+\infty} f(t)\, e^{-zt} dt = 0.$

Proof. By 1) and 2),

$$\int_0^{+\infty} |f(t)e^{-zt}|\, dt = \int_0^{+\infty} |f(t)| e^{-\operatorname{Re} z . t} dt \leq \int_0^{+\infty} |f(t)|\, e^{-\operatorname{Re} z_0 . t}\, dt =$$

$$= \int_0^{+\infty} |f(t)e^{-z_0 t}|\, dt \overset{2)}{<} +\infty \quad \text{for all } z \text{ with } \operatorname{Re} z \in [\operatorname{Re} z_0, +\infty),$$

whence I. follows.

Next let $\operatorname{Re} z \in [\operatorname{Re} z_0, +\infty)$ so that, by I., $\int_0^{+\infty} f(t) e^{-zt} dt$ exists. Thus, for any $0 < T_1 < T_2 < +\infty$,

$$(1) \qquad \left| \int_0^{+\infty} f(t)e^{-zt}\,dt \right| \leq \left(\int_0^{T_1} + \int_{T_1}^{T_2} + \int_{T_2}^{+\infty} \right) |f(t)|\, e^{-\mathrm{Re}\, z.t}\, dt.$$

Choose any $\varepsilon \in (0,+\infty)$. In view of 2) and the absolute continuity of the Lebesgue integral we may fix T_1 so small and T_2 so large that

$$\begin{cases} \int_0^{T_1} |f(t)|e^{-\mathrm{Re}\, z.t}dt \leq \int_0^{T_1} |f(t)|e^{-\mathrm{Re}\, z_0.t}\, dt = \int_0^{T_1} |f(t)e^{-z_0 t}|\, dt < \frac{1}{3}\varepsilon \\ \int_{T_2}^{+\infty} |f(t)|\, e^{-\mathrm{Re}\, z.t}\, dt \leq \int_{T_2}^{+\infty} |f(t)|e^{-\mathrm{Re}\, z_0.t}\, dt = \int_{T_2}^{+\infty} |f(t)e^{-z_0 t}|\, dt < \frac{1}{3}\varepsilon . \end{cases}$$

Since $\lim\limits_{\mathrm{Re}\, z \to +\infty} e^{-\mathrm{Re}(z-z_0).T_1} = 0$ there eixts $x_1 \in [\mathrm{Re}\, z_0, +\infty)$ such that

$$(3) \quad \begin{cases} \int_{T_1}^{T_2} |f(t)|\, e^{-\mathrm{Re}\, z.t}\, dt = \int_{T_1}^{T_2} |f(t)|\, e^{-\mathrm{Re}\, z_0.t}\, e^{-\mathrm{Re}(z-z_0)t}\, dt \leq \\ \leq e^{-\mathrm{Re}(z-z_0)T_1} \int_{T_1}^{T_2} |f(t)|\, e^{-\mathrm{Re}\, z_0.t}\, dt \leq \\ \leq e^{-\mathrm{Re}(z-z_0).T_1} \int_0^{+\infty} |f(t)e^{-z_0 t}|\, dt \ \frac{1}{3} \qquad \text{for all } z \text{ with} \\ \mathrm{Re}\, z \in (x_1, +\infty). \end{cases}$$

By (1), (2) and (3),

$$\left| \int_0^{+\infty} f(t)e^{-zt}dt \right| < \varepsilon \qquad \text{for all } z \text{ with } \operatorname{Re} z \in (x_1, +\infty),$$

whence II. follows.

2. Remarks. In the sequel we shall require some details concerning curves in the open complex plane K. A simply closed curve, a regular curve, equality $C_2 = C_1$ of curves C_1 and C_2, equality "up to orientation" $C_2 = -C_1$ of curves C_1 and C_2, and the sum $C_1 + \ldots + C_n$ of curves $C_1, \ldots, C_n$ are to be defined as in Saks, Zygmund (13), p. 38-40., 91.-92.

We shall also make use of the famous Jordan theorem according to which the set of all points of any simply closed curve C in the open complex plane K divides the closed complex plane into a bounded and an unbounded region, and forms their common boundary. The bounded region in question will be called the interior of the given curve C, and denoted by Int C.

3. Theorem. Suppose:

1) $T \in (0, +\infty)$.

2) $f \in L(0,T)$.

3) $E(z) = \int_0^T f(t)e^{-zt}\,dt$ for all $z \in K$.

Then E is a holomorphic function for all $z \in K$.

Proof. Fix any $z_0 \in K$, $r \in (0,+\infty)$. Then the function e^{-tz} of t,z is continuous and thus uniformly continuous for all t,z such that $t \in [0,T]$, $|z-z_0| \leq r$. Consequently given any $\varepsilon \in (0,+\infty)$ there exists $\delta \in (0,+\infty)$ such that

$$(1) \qquad \left| e^{-zt} - e^{-z_0 t} \right| < \frac{\varepsilon}{\int_0^T |f(t)|dt + 1} \quad \text{for all } t \in [0,T],\ |z-z_0| \leq \delta.$$

Hence

$$\left| E(z)-E(z_0) \right| \overset{3)}{=} \left| \int_0^T f(t)\,(e^{-zt} - e^{-z_0 t})dt \right| \leq \int_0^T |f(t)|\,|e^{-zt} - e^{-z_0 t}|\,dt \overset{(1)}{\leq}$$

$$\overset{(1)}{\leq} \frac{\int_0^T |f(t)|dt}{\int_0^T |f(t)|dt+1}\,\varepsilon < \varepsilon \qquad \text{for all } |z-z_0| \leq \delta$$

so that E is continuous at z_0. Since $z_0 \in K$ was arbitrary we see that

(2) E is continuous in K.

Let C be any simply closed regular curve in K. Since, for each fixed $t \in [0,T]$, e^{-zt} is a holomorphic function of z in K it follows from Cauchy's theorem that

(3) $$\int_C e^{-zt}\,dz = 0 \qquad \text{for all } t \in [0,T].$$

Since the function e^{-zt} of t,z is continuous and thus bounded for all $t \in [0,T]$, $z \in C$, it next follows from 2) that

(4) $$\int_C \left[\int_0^T |f(t)|\,|e^{-zt}|\,dt \right] dz \leq M \int_0^T |f(t)|\,dt \cdot \text{length of } C \overset{2)}{<} +\infty.$$

By 3), (4), Fubinis theorem and (3),

(5) $$\int_C E(z)\,dz \overset{3)}{=} \int_C \left[\int_0^T f(t)e^{-zt}\,dt \right] dz \overset{(4),\text{Fubini}}{=} \int_0^T f(t) \left[\int_C e^{-zt}\,dz \right] dt \overset{(3)}{=} 0.$$

By (2), (5) and Morera's theorem, E is holomorphic in K, which completes the proof.

Finally we shall need a modification of Cauchy's theorem concerning the decomposition of a meromorphic function into partial fractions as formulated in the next paragraph.

4. Theorem. Suppose:

1) Φ is a holomorphic function in K except at the points $z_1, z_2, \ldots \neq 0$, where it has poles.

2) $C_1, C_2, \ldots$ are simply closed regular curves in K satisfying the following conditions:

a) $z_1, z_2, \ldots \notin C_k \quad (k = 1,2,\ldots)$.

b) $C_k \subset \operatorname{Int} C_{k+1} \quad (k = 1,2,\ldots)$.

c) Given any $z_0 \in K$ there exists k such that $z_0 \in \operatorname{Int} C_k$.

3) $I_n = \left\{ k = 1,2,\ldots;\ z_k \in \operatorname{Int} C_n \right\}$ $(n = 1,2,\ldots)$.

4) <u>There exists a non-negative integer</u> m <u>such that</u>

$$\lim_{k \to +\infty} \int_{C_k} \frac{z^m \Phi(\xi)}{\xi^m (\xi - z)} d\xi = 0 \quad \underline{\text{for all}} \quad z \in K.$$

5) $H_k^{\Phi}\left(\frac{1}{z-z_k}\right)$ <u>is the principal part of the Laurent expansion of</u> Φ <u>in a neighborhood of the point</u> z_k $(k = 0,1,\ldots)$.

6) $P_k^{\Phi}(z)$ <u>is the sum of the first</u> m <u>terms of the expansion</u> of $H_k^{\Phi}\left(\frac{1}{z-z_k}\right)$ <u>in a power series in a neighborhood of the point</u> 0 $(k = 1,2,\ldots)$.

<u>Then</u>

$$\Phi(z) = \sum_{k=0}^{m-1} \frac{\Phi^{(k)}(0)}{k!} z^k + \lim_{n \to +\infty} \sum_{k \in I_n} \left[H_k^{\Phi}\left(\frac{1}{z-z_k}\right) - P_k^{\Phi}(z) \right]$$

<u>for all</u> $z \neq z_1, z_2, \ldots, \infty$.

<u>Proof</u> proceeds analogously to that of theorem (4.7) in Saks, Zygmund (13), Ch. VIII, p. 309.

<u>5. Remark</u>. The theorems in 1. and 3. may be found in Doetsch (5), vol. 1., p. 162. and 147. respectively. Our proof of 3. is simpler.

§ 38. A necessary and sufficient condition for a complex function F to be the Laplace transformation of a function $f \in L(0,2\pi)$ with period 2π for all $\operatorname{Re} z \in (0,+\infty)$.

1. Theorem. Let $f \in L(0,2\pi)$ be real-valued with period 2π. Then the following two conditions I. and II. are equivalent:

I. $$F(z) = \int_0^{+\infty} f(t)\, e^{-zt} dt \quad \text{for all} \quad \operatorname{Re} z \in (0,+\infty).$$

II. 1) $$F(z) = \frac{E(z)}{1-e^{-2\pi z}} \quad \text{for all} \quad \operatorname{Re} z \in (0,+\infty).$$

2) E is an entire function.

3) $E(z)$ is real for all $z \in (0,+\infty)$.

4) $\lim\limits_{z \to +\infty} E(z) = 0$.

5) There exists $M \in [0,+\infty)$ such that

a) $|E(z)| \leq M e^{-2\pi \operatorname{Re} z}$ for all $\operatorname{Re} z \in (-\infty,0]$,

b) $|E(z)| \leq M$ for all $\operatorname{Re} z \in [0,+\infty)$,

6) $$f(t) \sim \frac{1}{2\pi} E(0) + \sum_{k=1}^{+\infty} \left[\frac{1}{\pi} \operatorname{Re} E(ki) \cos kt - \frac{1}{\pi} \operatorname{Im} E(ki) \sin kt \right]$$

Proof. I. $\Rightarrow$ II.

Let I. hold. Since $f \in L(0,2\pi)$ the integral

$$(1) \qquad E(z) = \int_0^{2\pi} f(t)\, e^{-zt}\, dt$$

exists for all $z \in K$. Since f is of period 2π it follows from I. and (1) that

$$F(z) \overset{\text{I.}}{=} \int_0^{+\infty} f(t)\, e^{-zt} dt = \sum_{k=0}^{+\infty} \int_{2\pi k}^{2\pi(k+1)} f(t) e^{-zt} dt = \left| \begin{array}{l} t = u+2\pi k \\ dt = du \\ \begin{array}{c|c} t & u \\ \hline 2\pi k & 0 \\ 2\pi(k+1) & 2\pi \end{array} \end{array} \right| =$$

$$= \sum_{k=0}^{+\infty} \int_0^{2\pi} f(u+2\pi k) e^{-z(u+2\pi k)} du \overset{f \text{ of period } 2\pi}{=} \sum_{k=0}^{+\infty} (e^{-2\pi z})^k \int_0^{2\pi} f(u) e^{-zu} du \overset{(1)}{=}$$

$$\overset{(1)}{=} E(z) \sum_{k=0}^{+\infty} (e^{-2\pi z})^k = \frac{E(z)}{1-e^{-2\pi z}} \quad \text{for all } \operatorname{Re} z \in (0,+\infty)$$

so that 1) holds. By (1) and 37.3, 2) holds. Since f is real-valued, (1) implies 3). By (1) and 37.1, 4) holds. Setting $M = \int_0^{2\pi} |f(t)|\, dt$, (1) implies 5). Since $f \in L(0,2\pi)$ is of period 2π, it follows from (1) that the usual Fourier coefficients of f are

$$a_0 = \frac{1}{2\pi} \int_0^{2\pi} f(t) dt$$

$$\left.\begin{array}{l} a_k = \dfrac{1}{\pi} \displaystyle\int_0^{2\pi} f(t) \cos kt\, dt \overset{(1)}{=} \dfrac{1}{\pi} \operatorname{Re} E(ki) \\ b_k = \dfrac{1}{\pi} \displaystyle\int_0^{2\pi} f(t) \sin kt\, dt \overset{(1)}{=} -\dfrac{1}{\pi} \operatorname{Im} E(ki) \end{array}\right\} (k = 1,2,\ldots),$$

so that 6) holds. Consequently II. holds

II. $\Rightarrow$ I.

Let II. hold. Since by assumption, $f \in L(0,2\pi)$ with period 2π and, by 6),

$$(2) \qquad a_0 = \frac{1}{2\pi} E(0), \quad a_k = \frac{1}{\pi} \operatorname{Re} E(ki), \quad b_k = -\frac{1}{\pi} \operatorname{Im} E(ki) \quad (k = 1,2,\ldots)$$

are the usual Fourier coefficients of f, it follows from (2) and 29.1 that

$$(3) \qquad \left\{ \begin{aligned} \int_0^{+\infty} f(t)e^{-zt}dt &\overset{(2),29.1}{=} a_0 \int_0^{+\infty} e^{-zt}dt + \sum_{k=1}^{+\infty} \Big(a_k \int_0^{+\infty} e^{-zt} \cos kt\, dt + \\ &+ b_k \int_0^{+\infty} e^{-zt} \sin kt\, dt\Big) = \frac{a_0}{z} + \sum_{k=1}^{+\infty} \frac{a_k z + k b_k}{k^2 + z^2} \quad \text{for } \operatorname{Re} z \in (0,+\infty). \end{aligned} \right.$$

Consider the function

$$(4) \qquad F(z) = \frac{E(z)}{1-e^{-2\pi z}} .$$

By 2) and (4), F is holomorphic in the open complex plane except at the points $z = ki$ $(k = 0,\pm 1,\ldots)$, at which F has removable sigularities or simple poles. By (4), $\operatorname{res}_{z=ki} F(z) = \frac{E(ki)}{2\pi}$ for $k = 0,\pm 1,\ldots$ so that, by (2),

$$\operatorname{res}_{z=0} F(z) = a_0, \quad \operatorname{res}_{z=ki} F(z) = \frac{1}{2}(a_k - ib_k), \quad \operatorname{res}_{z=-ki} F(z) = \frac{1}{2}(a_k + ib_k)$$

$$(k = 1,2,\ldots).$$

Therefore the Laurent expansions of the function F in appropriate neighborhoods of the points $z = ki$ $(k = 0, \pm 1, \ldots)$ have principal parts

$$(5)\quad \begin{cases} H_0^F\left(\frac{1}{z}\right) = \frac{a_0}{z}, \quad H_k^F\left(\frac{1}{z-ki}\right) = \frac{1}{2}\,\frac{a_k - ib_k}{z-ki}, \quad H_{-k}^F\left(\frac{1}{z+ki}\right) = \frac{1}{2}\,\frac{a_k + ib_k}{z+ki} \\ \qquad (k = 1, 2, \ldots). \end{cases}$$

Next, consider the function

$$(6)\qquad (z) = F(z) - \frac{a_0}{z} \overset{(4)}{=} \frac{E(z)}{1-e^{-2\pi z}} - \frac{a_0}{z}.$$

From (6) and the above results concerning the function F it follows that Φ is holomorphic in the open complex plane except at the point $z = 0$, at which Φ has a removable singularity, and the points $z = ki$ $(k = \pm 1, \pm 2, \ldots)$, at which it has eigher removable singularities or simple poles. Consequently setting $\Phi(0) = \lim_{z \to 0} \Phi(z)$ the function becomes holomorphic at $z = 0$ as well. Since the function $\frac{a_0}{z}$ is holomorphic at the points $z = ki$ $(k = \pm 1, \pm 2, \ldots)$ it follows from (5) and (6) that the Laurent expansions of the function Φ in appropriate neighborhoods of the points $z = ki$ $(k = \pm 1, \pm 2, \ldots)$ have the principal parts

$$(7)\qquad H_k^{\Phi}\left(\frac{1}{z-ki}\right) = \frac{1}{2}\,\frac{a_k - ib_k}{z-ki}, \quad H_{-k}^{\Phi}\left(\frac{1}{z+ki}\right) = \frac{1}{2}\,\frac{a_k + ib_k}{z+ki} \quad (k = 1, 2, \ldots).$$

Therefore the expansions of the principal parts (7) in power series in the neighborhood of $z = 0$ have leading terms

(8) $$P_k^{\Phi} = \frac{a_k - ib_k}{2k}\, i, \quad P_{-k}^{\Phi} = -\frac{a_k + ib_k}{2k}\, i \qquad (k = 1,2,\ldots).$$

By (7) and (8),

(9) $$\left[H_k^{\Phi}\left(\frac{1}{z-ki}\right) - P_k^{\Phi} \right] + \left[H_{-k}^{\Phi}\left(\frac{1}{z+ki}\right) - P_{-k}^{\Phi} \right] = \frac{a_k z + kb_k}{k^2+z^2} - \frac{b_k}{k} \qquad (k = 1,2,\ldots)$$

Now fix any $x \in (0,+\infty)$, and set

(10) $$R_k = \sqrt{x^2 + (k+\tfrac{1}{2})^2}\,, \qquad \varphi_k = \arccos\frac{x}{R_k} \qquad (k = 1,2,\ldots).$$

Let the curves $C_k^{(1)},\ldots, C_k^{(4)}$ have the equations

(11) $$\begin{cases} C_k^{(1)}: & z = R_k\, e^{i\varphi} & \text{for} & \varphi \in [-\varphi_k, \varphi_k], \\ C_k^{(2)}: & z = \xi + (k+\frac{1}{2})i & \text{for} & \xi \in [-x,x], \\ C_k^{(3)}: & z = R_k\, e^{i\varphi} & \text{for} & \varphi \in [\pi-\varphi_k, \pi+\varphi_k], \\ C_k^{(4)}: & z = \xi - (k+\frac{1}{2})i & \text{for} & \xi \in [-x,x], \end{cases}$$

and the curves C_k satisfy the condition

(12) $$C_k = C_k^{(1)} - C_k^{(2)} + C_k^{(3)} + C_k^{(4)} \qquad (k = 1,2,\ldots)$$

(see Fig. 1. !). The curves C_k are obviously simply closed and regular, and do not contain the points $0, \pm i, \pm 2i, \ldots$. Furthermore, all the points of C_k lie in the interior of C_{k+1} $(k = 1,2,\ldots)$, and given any complex z there exists a natural number k such that z lies in the interior of C_k.

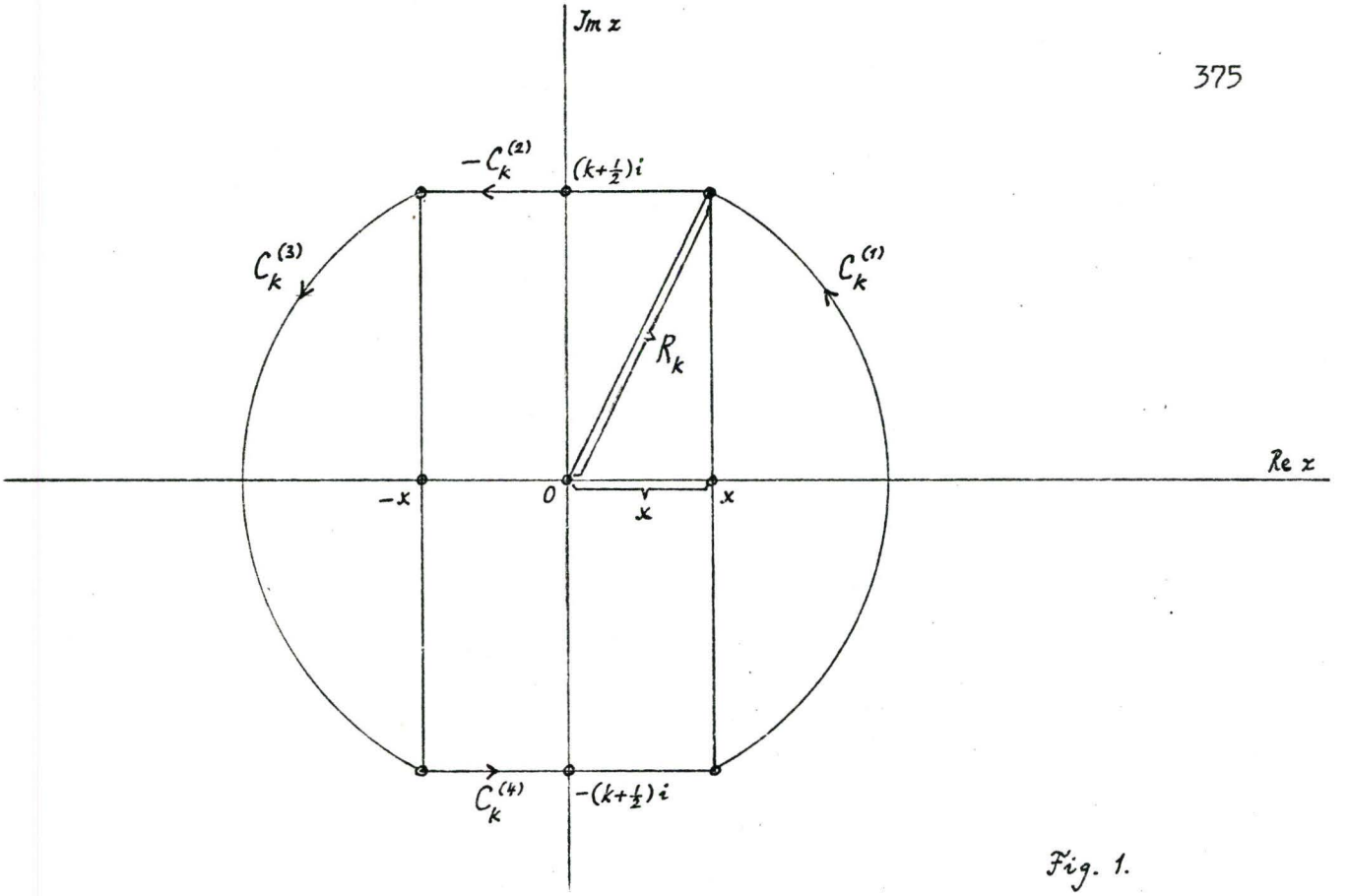

Fig. 1.

If $\operatorname{Re}\xi \in [x,+\infty)$, then $|1-e^{-2\pi\xi}| \geq 1-e^{-2\pi \operatorname{Re}\xi} \geq 1-e^{-2\pi x}$ and, by 5), $|E(\xi)| \leq M$ so that, by (4), $|F(\xi)| \leq \frac{M}{1-e^{-2\pi x}}$. If $\operatorname{Re}\xi \in (-\infty,-x]$ then $|1-e^{-2\pi\xi}| \geq e^{-2\pi \operatorname{Re}\xi}-1$ and, by 5), $|E(\xi)| \leq M\, e^{-2\pi \operatorname{Re}\xi}$ so that, by (4), $|F(\xi)| \leq \frac{M\, e^{-2\pi \operatorname{Re}\xi}}{e^{-2\pi \operatorname{Re}\xi}-1} =$

$= \frac{M}{1-e^{2\pi \operatorname{Re}\xi}} \leq \frac{M}{1-e^{-2\pi x}}$ again. In particular,

(13) $$|F(\xi)| \leq \frac{M}{1-e^{-2\pi x}} \quad \text{for } \xi \in C_k^{(1)} \cup C_k^{(3)}.$$

Besides,

$$(14)\quad \begin{cases} |\xi - z| \geq |\xi| - |z| = R_k - |z| = \sqrt{x^2 + (k+\frac{1}{2})^2} - |z| \\ \text{for } \xi \in C_k^{(1)} \cup C_k^{(3)} \text{ and large } k = 1,2,\ldots . \end{cases}$$

By (13), (14) and the Cauchy inequality,

$$(15)\qquad \int_{C_k^{(\alpha)}} \frac{z\,F(\xi)}{\xi\,(\xi - z)}\,d\xi \underset{k\to+\infty}{=} O\left(\frac{1}{k}\right) \quad \text{for each } z \in K\ (\alpha = 1,3).$$

If $\xi \in C_k^{(2)} \cup C_k^{(4)}$ then, by (11), $e^{-2\pi\xi} = -e^{-2\pi\xi}$ for some $\xi \in [-x,x]$ so that $|1-e^{-2\pi\xi}| = |1+e^{-2\pi\xi}| = 1+e^{-2\pi\xi} \geq 1+e^{-2\pi x}$. Next, by (5), $|E(\xi)| \leq M\,e^{2\pi x}$. Hence, by (4), $|F(\xi)| \overset{(4)}{=} \dfrac{|E(\xi)|}{|1-e^{-2\pi\xi}|} \leq \dfrac{M\,e^{2\pi x}}{1+e^{-2\pi x}}$. Besides, by Fig. 1, $|\xi| \geq k + \frac{1}{2}$ so that $|\xi - z| \geq |\xi| - |z| \geq k + \frac{1}{2} - |z|$ for large k. Hence, by the Cauchy inequality,

$$(16)\qquad \int_{C_k^{(\alpha)}} \frac{z\,F(\xi)}{\xi\,(\xi - z)}\,d\xi \underset{k\to+\infty}{=} O\left(\frac{1}{k}\right) \quad \text{for each } z \in K\ (\alpha = 2,4).$$

From (12), (15) and (16) we obtain the estimate

$$(17)\qquad \int_{C_k} \frac{z\,F(\xi)}{\xi\,(\xi - z)}\,d\xi \underset{k\to+\infty}{=} O\left(\frac{1}{k}\right) \quad \text{for each } z \in K.$$

By Fig.1, each $\xi \in C_k$ satisfies the inequality $|\xi| \geq k+\frac{1}{2}$. Since, by Fig. 1., C_k is of length $\leq 2\pi\sqrt{x^2+(k+\frac{1}{2})^2}+4x$ the Cauchy inequality implies another estimate

$$(18)\qquad \int_{C_k} \frac{z\,\frac{a_0}{\xi}}{\xi(\xi-z)}\,d\xi = \underset{k\to+\infty}{O}\left(\frac{1}{k^2}\right) \quad \text{for each } z \in K.$$

Finally, by (6), (17) and (18),

$$(19)\qquad \int_{C_k} \frac{z\,\Phi(\xi)}{\xi(\xi-z)}\,d\xi = \underset{k\to+\infty}{O}\left(\frac{1}{k}\right) \quad \text{for each } z \in K.$$

So we have verified all the assumptions of 37.4 with $m = 1$ so that, by (6), 37.4 with $m = 1$, and (9) we have

$$(20)\qquad \begin{cases} F(z) - \dfrac{a_0}{z} \overset{(6)}{=} \Phi(z) \overset{37.4}{=} \Phi(0) + \lim\limits_{n\to+\infty} \displaystyle\sum_{k=1}^{n} \Big\{ \Big[H_k^{\Phi}\left(\frac{1}{a-ki}\right) - P_k^{\Phi} \Big] + \\ \quad + \Big[H_{-k}^{\Phi}\left(\dfrac{1}{z-ki}\right) - P_{-k}^{\Phi} \Big] \Big\} \overset{(9)}{=} \Phi(0) + \lim\limits_{n\to+\infty} \displaystyle\sum_{k=1}^{n} \left(\frac{a_k z + k\, b_k}{k^2+z^2} - \frac{b_k}{k} \right) \\ \qquad \text{for } z \neq 0, \pm i, \pm 2i, \ldots, \infty. \end{cases}$$

Now let $\operatorname{Re} z \in (0,+\infty)$. Then, by (3), $\displaystyle\sum_{k=1}^{+\infty} \frac{a_k z + k\, b_k}{k^2+z^2}$ converges so that, by (20), $\displaystyle\sum_{k=1}^{+\infty} \frac{b_k}{k}$ also converges. Consequently, by (20) and (3),

$$(21)\qquad \begin{cases} F(z) \overset{(20)}{=} \dfrac{a_0}{z} + \displaystyle\sum_{k=1}^{+\infty} \frac{a_k z + k\, b_k}{k^2+z^2} + \Phi(0) - \sum_{k=1}^{+\infty} \frac{b_k}{k} \overset{(3)}{=} \\ \overset{(3)}{=} \displaystyle\int_0^{+\infty} f(t)e^{-zt}\,dt + \Phi(0) - \sum_{k=1}^{+\infty} \frac{b_k}{k} \qquad \text{for } \operatorname{Re} z \in (0,+\infty). \end{cases}$$

By (4) and 4),

$$(22) \qquad \lim_{z \to +\infty} F(z) \overset{(4)}{=} \lim_{z \to +\infty} \frac{E(z)}{1-e^{-2\pi z}} \overset{4)}{=} 0.$$

By (3) and 37.1,

$$(23) \qquad \lim_{z \to +\infty} \int_0^{+\infty} f(t)e^{-zt}dt = 0.$$

Since $\Phi(0) - \sum_{k=1}^{+\infty} \frac{b_k}{k}$ does not depend on z it follows from (21), (22) and (23) that

$$(24) \qquad \Phi(0) - \sum_{k=1}^{+\infty} \frac{b_k}{k} = 0.$$

Setting (24) into (21) we finally obtain

$$F(z) = \int_0^{+\infty} f(t)e^{-zt}dt \qquad \text{for } \operatorname{Re} z \in (0,+\infty)$$

so that I. holds.

2. Remarks. To verify condition 6) in 1., II., we need some tests for given real numbers a_0, a_k, b_k $(k = 1,2,\ldots)$ to be the usual Fourier coefficients of a real-valued function $f \in L(0,2\pi)$. For this purpose, the following results may be used.

By a well-known theorem concerning Fourier series, if

$$f(t) = a_0 + \sum_{k=1}^{+\infty} (a_k \cos kt + b_k \sin kt) \quad \text{for all} \quad t \in [0,2\pi] \text{ , where}$$

the trigonometric series converges uniformly for all $t \in [0,2\pi]$, then

$$f(t) \sim a_0 + \sum_{k=1}^{+\infty} (a_k \cos kt + b_k \sin kt).$$

By the Riesz-Fischer theorem 2.5, if $a_0^2 + \sum_{k=1}^{+\infty} (a_k^2 + b_k^2) < +\infty$

then there exists $f \in L^2(0,2\pi) \overset{3.10}{\subset} L(0,2\pi)$ such that

$$f(t) \sim a_0 + \sum_{k=1}^{+\infty} (a_k \cos kt + b_k \sin kt).$$

By the second Hausdorff-Young theorem 27.5, if $1 < p < 2$, $\frac{1}{p} + \frac{1}{q} = 1$,

and $|a_0|^p + \sum_{k=1}^{+\infty} (|a_k|^p + |b_k|^p) < +\infty$, then there exists $f \in L^q(0,2\pi) \overset{3.10}{\subset}$

$\overset{3.10}{\subset} L(0,2\pi)$ such that $f(t) \sim a_0 + \sum_{k=1}^{+\infty} (a_k \cos kt + b_k \sin kt)$.

Next we may apply the generalized du Bois-Reymond theorem:

If C is a countable subset of $[0,2\pi]$, $f \in L(0,2\pi)$, $f(t)$ is finite for

all $t \in [0,2\pi] - C$, and $f(t) = a_0 + \sum_{k=1}^{+\infty} (a_k \cos kt + b_k \sin kt)$ for all

$t \in [0,2\pi] - C$, then $f(t) \sim a_0 + \sum_{k=1}^{+\infty} (a_k \cos kt + b_k \sin kt)$. For the proof

see Bary (2), vol. 2., p. 352.

Finally we may apply the following two theorems, whose component statements are proved in the books by Bary quoted above.

<u>Theorem</u>. <u>Let</u> $a_1 \geq a_2 \geq \ldots, \lim_{k \to +\infty} a_k = 0$. <u>Then the following holds</u>:

I. $\sum_{k=1}^{+\infty} a_k \cos kt$ <u>converges to some</u> $f(t)$ <u>at least for all</u> $t \in (0,2\pi)$.

II. $\sum_{k=1}^{+\infty} a_k \cos kt$ <u>is a Fourier series if and only if</u> $f \in L(0,2\pi)$. <u>In such a case</u> $f(t) \sim \sum_{k=1}^{+\infty} a_k \cos kt$.

III. <u>If</u> $\sum_{k=1}^{+\infty} \frac{a_k}{k} < +\infty$ <u>then</u> $f \in L(0,2\pi)$.

IV. <u>Let</u> $p \in (1,+\infty)$. <u>Then</u> $f \in L^p(0,2\pi) \overset{3.10}{\subset} L(0,2\pi)$ <u>if</u> and only if $\sum_{k=1}^{+\infty} k^{p-2} a_k^p < +\infty$.

<u>Proof</u>. I. See Bary (2), vol. 1., p. 87. II. See Bary (2), vol. 2., p. 199. III. See Bary (2), vol. 2., p. 201. IV. See Bary (2), vol. 2., p. 207.

<u>Theorem</u>. <u>Let</u> $b_1 \geq b_2 \geq \ldots, \lim_{k \to +\infty} b_k = 0$. <u>Then the following holds</u>:

I. $\sum_{k=1}^{+\infty} b_k \sin kt$ <u>converges to some</u> $f(t)$ <u>for all</u> $t \in [0,2\pi]$.

II. $\sum_{k=1}^{+\infty} b_k \sin kt$ <u>is a Fourier series if and only if</u> $f \in L(0,2\pi)$.

<u>In such a case</u> $f(t) \sim \sum_{k=1}^{+\infty} b_k \sin kt$.

III. <u>Let</u> $p \in [1,+\infty)$. <u>Then</u> $f \in L^p(0,2\pi) \overset{3.10}{\subset} L(0,2\pi)$ <u>if and only if</u> $\sum_{k=1}^{+\infty} k^{p-2} b_k^p < +\infty$.

<u>Proof</u>. I. See Bary (2), vol. 1., p. 87, II. See Bary (2), vol. 2., p. 199. III. For $p = 1$ see Bary (2), vol. 2., p. 201., for $p \in (1,+\infty)$ p. 207.

<u>3. Remark</u>. The necessary and sufficient condition in 1. was proved by the author in a paper, Novotný (29). The proof given here is a slightly simplified version.

§ 39. The decomposition of the analytic continuation of the Laplace transformation of a function $f \in L(0,2\pi)$ with period 2π into partial fractions

1. Theorem. Suppose:

1) $f \in L(0,2\pi)$ is real valued with period 2π.

2) $f(t) \sim a_0 + \sum_{k=1}^{+\infty} (a_k \cos kt + b_k \sin kt)$.

3) $E(z) = \int_0^{2\pi} f(t)\, e^{-zt} dt$ for all $z \in K$. (By 38.3, E is an entire function.)

4) $F(z) = \int_0^{+\infty} f(t) e^{-zt} dt$ for all z with $\operatorname{Re} z \in (0,+\infty)$.

(By 29.1, $F(z)$ exists if $\operatorname{Re} z \in (0,+\infty)$.)

5) $G(z) = \dfrac{E(z)}{1-e^{-2\pi z}}$ for all $z \neq 0, \pm i, \pm 2i, \ldots, \infty$.

Then the following holds:

I. G is the analytic continuation of F.

II. $G(z) = \dfrac{a_0}{z} + \sum_{k=1}^{+\infty} \dfrac{a_k z + k\, b_k}{k^2 + z^2}$ for all $z \neq 0, \pm i, \pm 2i, \ldots, \infty$.

III. Let $\sum_{k=1}^{+\infty} \left| \frac{b_k}{k} \right| < +\infty$. By 1), 2) and 22.3,

$a_k, b_k \to +\infty$ as $k \to +\infty$ so that

(1) $$|a_k|, |b_k| \leq M < +\infty \quad \text{for } k = 1,2,\ldots .$$

Fix any $R \in (0,+\infty)$, and set $k_0 = \min \left\{ k = 1,2,\ldots;\ k > R \right\}$. Then

(2) $$\begin{cases} k > R,\ |z| \leq R \quad \left| \dfrac{1}{k^2 + z^2} \right| \leq \left| \dfrac{1}{1 + \dfrac{z^2}{k^2}} \right| \dfrac{1}{k^2} \leq \\ \leq \dfrac{1}{1 - \dfrac{R^2}{k_0^2}} \dfrac{1}{k^2} = \dfrac{k_0^2}{k_0^2 - R^2} \dfrac{1}{k^2} \Rightarrow \left| \dfrac{k^2}{k^2 + z^2} \right| \leq \dfrac{k_0^2}{k_0^2 - R^2} . \end{cases}$$

Consequently

(3) $$\begin{cases} \sum_{k>R}^{+\infty} \left| \dfrac{a_k z + k\, b_k}{k^2 + z^2} \right| \leq \sum_{k>R} \dfrac{|a_k|\,|z|}{k^2} \left| \dfrac{k^2}{k^2 + z^2} \right| + \\ + \sum_{k>R} \left| \dfrac{b_k}{k} \right| \left| \dfrac{k^2}{k^2 + z^2} \right| \overset{(1),(2)}{\leq} \dfrac{k_0^2}{k_0^2 - R^2} \left(M R \sum_{k>R} \dfrac{1}{k^2} + \sum_{k>R} \left| \dfrac{b_k}{k} \right| \right) < \\ \overset{\text{ass.}}{<} +\infty \quad \text{for all } |z| \leq R, \end{cases}$$

which proves the statement concerning the uniform convergence. Finally, fixing any $z \neq 0, \pm i, \pm 2i, \ldots, \infty$, and then any R such that $|z| \leq R < +\infty$, we have

III. <u>Let</u> $\sum_{k=1}^{+\infty} \left| \frac{b_k}{k} \right| < +\infty$. (By 28.6, this assumption is satisfied if $f \in L^p(0,2\pi)$ for some $p \in (1,+\infty)$.) <u>Then the series in</u> II. <u>converges absolutely for all</u> $z \neq 0, \pm i, \pm 2i, \ldots, \infty$. <u>If</u> $R \in (0,+\infty)$ <u>the series</u> $\sum_{k>R} \frac{a_k z + k\, b_k}{k^2 + z^2}$ <u>converges uniformly for all</u> $|z| \geq R$.

<u>Proof</u>. I. By 5) and 3), G is holomorphic for all $z \neq 0, \pm i, \pm 2i, \ldots, \infty$. By 4), 38.1 and 5), $F(z) \overset{4),38.1}{=} \frac{E(z)}{1-e^{-2\pi z}} \overset{5)}{=} G(z)$ for all z with $\operatorname{Re} z \in (0,+\infty)$. Therefore G is the analytic continuation of F.

II. We see from (4) in the proof of 38.1 that when proving the implication II. $\Rightarrow$ I. in 38.1, we simply used the notation F instead of G for the fraction in 5) above. Therefore, by (20) (writing G instead of F) and (24) in the proof of 38.1, we have

$$G(z) - \frac{a_0}{z} = \Phi(0) + \lim_{n \to +\infty} \sum_{k=1}^{n} \left(\frac{a_k z + k\, b_k}{k^2 + z^2} - \frac{b_k}{k} \right) \text{ for } z \neq 0, \pm i, \pm 2i, \ldots, \infty,$$

$$\Phi(0) - \sum_{k=1}^{+\infty} \frac{b_k}{k} = 0.$$

Hence $G(z) = \frac{a_0}{z} + \sum_{k=1}^{+\infty} \frac{a_k z + k\, b_k}{k^2 + z^2}$ for $z \neq 0, \pm i, \pm 2i, \ldots, \infty$.

$$\sum_{k=1}^{+\infty} \left| \frac{a_k z + k\, b_k}{k^2 + z^2} \right| \leq \underbrace{\sum_{1 \leq k \leq R}}_{\text{finite since}} + \underbrace{\sum_{k > R}}_{\text{finite by (3)}} < +\infty,$$

$$z \neq 0, \pm i, \ldots, \infty$$

which proves the absolute convergence for $z \neq 0, \pm i, \pm 2i, \ldots, \infty$.

2. Remark. The preceding result is new.

CHAPTER 6.:

The term-by-term integration and Laplace transformation of eigenfunction expansions for linear differential equations

§ 40. The term-by-term integration and Laplace transformation of eigenfunction expansions for a linear n-th order differential equation with boundary conditions on a closed and bounded interval

1. Definition. Suppose:

1) X is a linear space over K.

2) A is a linear operator with domain of definition $D_A \subset X$, and range $R_A \subset X$.

3) $Ax = \lambda x$ for some $\lambda \in K$, $0 \neq x \in X$.

Then λ is said to be an eigenvalue of A, and x is said to be an eigenvector of A corresponding to λ. If X consists of functions then x is said to be an eigenfunction of A corresponding to λ.

The set of all eigenvalues of A is denoted by E_A. If $\lambda \in E_A$ the set of all $x \in D_A$ such that $Ax = \lambda x$ is said to be the eigenspace corresponding to λ, and is denoted by $L_{A,\lambda}$.

(Obviously, for each $\lambda \in E_A$, $L_{A,\lambda}$ is a linear subspace of X, and $L_{A,\lambda} - \{0\}$ is the set of all eigenvectors of A corresponding to λ.)

2. Definition. Let $-\infty < a < b < +\infty$; $n = 0,1,\ldots$

Then $C^n(a,b)$ is the set of all complex-valued functions with a continuous n-th derivative on $[a,b]$, where

$$(1) \qquad (x,y) = \int_a^b x(t)\,\overline{y(t)}\,dt \qquad \text{for all} \quad x,y \in C^n(a,b)$$

(so that, by 1.1, (1) is an inner product on $C^n(a,b)$), and

$$(2) \qquad \|x\| = (x,x)^{\frac{1}{2}} = \left[\int_a^b |x(t)|^2\,dt\right]^{\frac{1}{2}} \qquad \text{for all} \quad x \in C^n(a,b)$$

(so that, by 1.3, (2) is the standard norm on $C^n(a,b)$).

Clearly $C^n(a,b)$ is a normed linear subspace of $L^2(a,b)$ for $n = 0,1,\ldots$.

For $C^0(a,b)$ we write $C(a,b)$.

3. Remark. Our definition of the norm in $C^n(a,b)$ differs from the usual definition $\|x\| = \max_{a \le t \le b} |x(t)|$ for all $x \in C^n(a,b) \subset C(a,b)$. This difference in norm, however, converting $C^n(a,b)$ into an inner product subspace of $L^2(a,b)$ with its standard norm, plays an important role in the proofs of 6. and 7.

4. General assumptions. To avoid lengthy repetitions we shall now formulate some assumptions that will occur in several subsequent theorems.

1) $-\infty < a < b < +\infty$; n is a natural number;

$M_{j,k}$, $N_{j,k}$ are complex numbers $(j,k = 1,2,\ldots n)$.

2) $p_k(t) \in C^{n-k}(a,b)$ $(k = 0,1,\ldots,n)$; $p_0(t) \neq 0$

<u>for all</u> $t \in [a,b]$.

3) $$U_j x = \sum_{k=1}^{n} M_{j,k}\, x^{(k-1)}(a) + N_{j,k}\, x^{(k-1)}(b)$$

<u>for all</u> $x \in C^{n-1}(a,b)$, $j = 1,2,\ldots,n$. (Consequently, U_j are linear functionals on $C^{n-1}(a,b) \overset{2.}{\subset} C_n(a,b) \overset{2.}{\subset} L^2(a,b)$ for $j = 1,2,\ldots,n$.)

4) $B^n(a,b)$ <u>is the set of all functions</u> $x \in C^n(a,b)$ <u>such that</u> $U_j x = 0$ <u>for</u> $j = 1,2,\ldots,n$. (Consequently, $B^n(a,b)$ is a linear subspace of $C^n(a,b) \overset{2.}{\subset} L^2(a,b)$.)

5) $$Ax = \sum_{k=0}^{n} p_k\, x^{(n-k)}$$ <u>for each</u> $x \in B^n(a,b)$. (Consequently, A is a linear operator with domain of defintion $D_A = B^n(a,b) \overset{4)}{\subset} C^n(a,b) \overset{2.}{\subset} \overset{2.}{\subset} L^2(a,b)$, and range $R_A = A\, D_A = A\, B^n(a,b) \overset{2),4)}{\subset} C(a,b) \overset{2.}{\subset} L^2(a,b)$.

6) $(Ax,y) = (x,Ay)$ <u>for all</u> $x,y \in B^n(a,b)$.

<u>5. Theorem</u>. <u>Suppose</u>:

1)-5) <u>as in</u> 4.

6) E_A, $L_{A,\lambda}$ <u>for</u> $\lambda \in E_A$ <u>as in</u> 1.

7) λ <u>is a complex number</u>.

<u>Then the following holds</u>:

I. <u>There exists a function</u> $x(t)$ <u>not identically equal to zero on</u> $[a,b]$ <u>such that</u>

(1) $$Ax = \lambda x, \quad U_j x = 0 \quad (j = 1,2,\ldots,n),$$

<u>i.e., by</u> 4), <u>such that</u>

(2) $\qquad Ax = \lambda x, \qquad x \in B^n(a,b),$

<u>if and only if</u> $\lambda \in E_A$.

II. <u>In this case the set of all functions</u> x <u>satisfying</u> (1) <u>or</u> (2) <u>coincides with</u> $L_{A,\lambda}$.

<u>Proof</u> is obvious.

<u>6. Theorem</u>. <u>Suppose</u> 1)-6) <u>as in</u> 4. <u>Then the following holds</u>:

I. <u>All eigenvalues of</u> A <u>are real</u>.

II. <u>The set</u> E_A <u>of all eigenvalues of</u> A <u>is infinite, countable, and does not have any finite cluster points</u>.

III. <u>The eigenfunctions of</u> A <u>corresponding to different eigenvalues of</u> A <u>are orthogonal on</u> $[a,b]$ <u>with respect to the weight function</u> $w(t) = 1$ <u>for all</u> $t \in [a,b]$.

<u>Proof</u> see Coddington and Levinson (4) p. 189-190., 197.

<u>7. Theorem</u>. <u>Suppose</u> 1)-6) <u>as in</u> 4.

<u>Then the following holds</u>:

I. <u>There exist a sequence of numbers</u> $\lambda_0, \lambda_1, \ldots,$ <u>and a sequence of functions</u> $y_0, y_1, \ldots,$ <u>satisfying the following conditions</u>:

(i) $|\lambda_0| \leq |\lambda_1| \leq \ldots$.(The equality $\lambda_k = \lambda_{k+1}$ for some $k = 0,1,\ldots$ is not excluded.)

(ii) <u>Each</u> $\lambda_0, \lambda_1, \ldots$ <u>is an eigenvalue of</u> A.

(iii) <u>Each eigenvalue of</u> A <u>is contained among the numbers</u> $\lambda_0, \lambda_1, \ldots$.

(iv) y_k <u>is an eigenfunction of</u> A <u>corresponding to</u> λ_k <u>such that</u> $\| y_k \|_{L^2(a,b)} = 1$ <u>for</u> $k = 0,1,\ldots$.

(v) $y_0, y_1, \ldots$ <u>is an orthonormal system on</u> $[a,b]$ <u>with respect to the weight function</u> $w(t) = 1$ <u>for all</u> $t \in [a,b]$.

II. <u>If</u> $f \in B^n(a,b) \overset{4.}{\subset} C^n(a,b) \overset{2.}{\subset} L^2(a,b)$, <u>and</u> $c_k(f)$ <u>are the Fourier coefficients of</u> f <u>with respect to</u> y_k $(k = 0,1,\ldots)$ (see 1.16 and 3.12) <u>then</u>

$$f(t) = \sum_{k=0}^{+\infty} c_k(f)\, y_k(t) \qquad \underline{\text{uniformly for all}} \quad t \in [a,b] .$$

III. <u>If</u> $f \in L^2(a,b)$, <u>and</u> $c_k(f)$ <u>are the Fourier coefficients of</u> f <u>with respect to</u> y_k $(k = 0,1,\ldots)$ <u>then</u>

$$f = \sum_{k=0}^{+\infty} c_k(f)\, y_k \qquad \underline{\text{in the}}\ L^2(a,b)\text{-}\underline{\text{norm}}.$$

IV. <u>With the assumptions as in</u> II. <u>the Parceval equality holds</u>:

$$\| f \|^2_{L^2(a,b)} = \sum_{k=0}^{+\infty} |c_k(f)|^2 .$$

V. <u>If</u> $f,g \in L^2(a,b)$, <u>and</u> $c_k(f)$, $c_k(g)$ <u>are the Fourier coefficients of</u> f,g <u>with respect to</u> y_k $(k = 0,1,\ldots)$, <u>the generalized Parceval equality holds</u>:

$$\int_a^b f(t)\, \overline{g(t)}\, dt = \sum_{k=0}^{+\infty} c_k(f)\, \overline{c_k(g)} .$$

VI. <u>The system</u> $y_0, y_1, \ldots$ <u>is maximal</u> (see 1.25 and 3.9).

VII. <u>The system</u> $y_0, y_1, \ldots$ <u>is closed in the</u> $L^2(a,b)$-<u>norm</u> (see 1.27 and 3.9).

<u>Proof</u>. Assuming 1)-6) as in 4. the statements I. (i), (ii), (iv) and (v), II. and III. are proved in Coddington and Levinson (4) p. 199.-200. But then, by 2.4, statement III. is equivalent to IV., V., VI. and VII.

It remains to prove (iii) in I. Let λ be an eigenvalue of A such that

(1) $$\lambda \neq \lambda_0, \lambda_1, \ldots .$$

Next let

(2) y be an eigenfunction of A corresponding to λ .

Then, by 1. and 5),

(3) $$0 \overset{1.}{\neq} y \overset{5)}{\in} B^n(a,b)$$

so that, by II.,

(4) $$\left\{ y(t) \overset{II.}{=} \sum_{k=0}^{+\infty} c_k(y)\, y_k(t) = \sum_{k=0}^{+\infty} (y, y_k)\, y_k(t) \text{ uniformly for all } t \in [a,b] . \right.$$

By (1), (iv), (2) and III. in 6.,

(5) $$(y,y_k) = 0 \quad \text{for} \quad k = 0,1,\ldots$$

so that, by (4), $y_k(t) = 0$ for all $t \in [a,b]$ in contradiction with (3). Consequently the inequality (1) is not possible, which proves (iii) in I.

8. Theorem. Suppose:

1)-6) as in 4.

7) $\lambda_0, \lambda_1, \ldots$ and $y_0, y_1, \ldots$ as in I. in 7.

8) $f \in L^2(a,b)$.

9) $c_k(f)$ is the Fourier coefficient of f with respect to y_k $(k = 0,1,\ldots)$ (see 1.16 and 3.9) so that $f \sim \sum_{k=0}^{+\infty} c_k(f)\, y_k$.

Then the following holds:

I. $$\int_{x_0}^{x} f(t)dt = \sum_{k=0}^{+\infty} c_k(f) \int_{x_0}^{x} y_k(t)\, dt \quad \text{for all} \quad x_0, x \in [a,b].$$

II. The series in I. converges absolutely and uniformly for all $x_0, x \in [a,b]$.

Proof. By 7) and I. in 7., $y_0, y_1, \ldots$ is an orthonormal system on $[a,b]$ with respect to the weight function $w(t) = 1$ for all $t \in [a,b]$. By VII. in 7., $y_0, y_1, \ldots$ is complete in the $L^2(a,b)$-norm. Finally, $\int_a^b \frac{dt}{w(t)} = \int_a^b dt = b-a \overset{1)}{<} +\infty$. Consequently, all the assumptions of 15.3 with $A = a$, $B = b$ are satisfied so that I. and II. follow from 15.3.

9. Theorem. Suppose:

1)-6) as in 4.

7) $\lambda_0, \lambda_1 \ldots$ and $y_0, y_1, \ldots$ as in 7.

8) $\tilde{y}_k$ is a periodic extension of y_k from $[a,b]$ into $[a,+\infty)$ with period $b-a$ $(k = 0,1,\ldots)$.

9) $f \in L^2(a,b)$ with period $b-a$.

10) $c_k(f)$ is the Fourier coefficient of f with respect to y_k $(k = 0,1,\ldots)$ (see 1.16 and 3.12) so that $f \sim \sum_{k=0}^{+\infty} c_k(f)\, y_k$.

Then the following holds:

I. $$\int_0^{+\infty} f(t+a)e^{-zt}dt = \sum_{k=0}^{+\infty} c_k(f) \int_0^{+\infty} \tilde{y}_k(t+a)e^{-zt}dt$$

for $\operatorname{Re} z \in (0,+\infty)$

II. Given any $\delta \in (0,+\infty)$ the series in I. converges absolutely and uniformly for all z with $\operatorname{Re} z \in [\delta,+\infty)$.

Proof. As in the prece ding proof, $y_0, y_1, \ldots$ is an orthonormal system on $[a,b]$ with respect to the weight function $w(t) = 1$ for all $t \in [a,b]$, and is closed in the $L^2(a,b)$-norm. The periodic extension of y_k from $[a,b]$ into $[a,+\infty)$ with period $b-a$ does not change the function values of y_k on (a,b) and, consequently, does not have any influence on the orthogonality and the fact that the system is closed, preserving, in addition to it, the Fourier coefficients of f with respect to the system. Finally, $\int_a^b \frac{dt}{w(t)} = \int_a^b dt = b-a \overset{1)}{<} +\infty$. The theorem then follows from 18.2.

10. Theorem. Suppose:

1)-6) as in 4.

7) $\Lambda_0, \Lambda_1, \ldots$ and $y_0, y_1, \ldots$ as in 7.

8) $\tilde{y}_k$ is a periodic extension of y_k from $[a,b]$ into $[a,+\infty)$ with period $b-a$ $(k = 0,1,\ldots)$.

9) $f \in L(a,b)$ with period $b-a$.

10) $c_k(f)$ is the Fourier coefficient of f with respect to y_k in the sense of 22.1 with $w(t) = 1$ for all $t \in [a,b]$ $(k = 0,1,\ldots)$.

(In view of 9) and $y_k \overset{7)}{\in} D_A \overset{4.}{\subset} C^n(a,b)$, $c_k(f)$ exist for all $k = 0,1,\ldots$ so that $f \sim \sum_{k=0}^{+\infty} c_k(f)\, y_k$.)

11) For some z with $\operatorname{Re} z \in (0,+\infty)$, the function $g(t) = e^{-zt}$ for all $t \in [a,b]$ satisfies the boundary conditions $U_j g = 0$ $(j = 1,2,\ldots,n)$.

Then

$$\int_0^{+\infty} f(t+a)e^{-zt}dt = \sum_{k=0}^{+\infty} c_k(f) \int_0^{+\infty} y_k(t+a)e^{-zt}dt.$$

Proof. By 7) and I. in 7., $y_0, y_1, \ldots$ is an orthonormal system on $[a,b]$ with respect to the weight function $w(t) = 1$ for all $t \in [a,b]$. By 11), $g \in C^n(a,b)$ and $U_j g = 0$ for $j = 1,2,\ldots,n$, so that, by 4), $g \in B^n(a,b)$. Therefore denoting the Fourier coefficients of g with respect to y_k by $c_k(g)$ $(k = 0,1,\ldots)$ it follows from II. in 7. that

$$\frac{e^{-zt}}{w(t)} = g(t) = \sum_{k=0}^{+\infty} c_k(g)\, y_k(t) = \sum_{k=0}^{+\infty} c_k \left[\frac{e^{-zt}}{w(t)} \right] y_k(t)$$

uniformly for all $t \in [a,b]$.

Consequently all the assumptions of 23.3 are satisfied if we take a sufficiently large positive constant for the function h so that our formula follows from 23.3.

11. Remark. The results in 8., 9. and 10. are new.

§ 41. Auxiliary results

1. The existence theorem. Suppose:

1) $a, b \in (-\infty, +\infty)$.

2) q is a real, continuous function on $[0, +\infty)$.

3) $m(x) = \max\limits_{0 \leq t \leq x} |q(t)|$ for all $x \in [0, +\infty)$.

Then the following holds:

I. For every complex λ, there exists exactly one function y_λ satisfying the following two conditions:

(i) $-y''_\lambda(x) + q(x)\, y_\lambda(x) = \lambda\, y_\lambda(x)$ for all $x \in [0, +\infty)$.

(ii) $y_\lambda(0) = a$, $y'_\lambda(0) = b$.

II. $|y_\lambda(x)| \leq (|a| + |b|\, x)\, e^{\sqrt{m(x) + |\lambda|}\, x}$ for all $x \in [0, +\infty)$, $\lambda \in K$.

III. For every $x \in [0, +\infty)$, $y_\lambda(x)$, $y'_\lambda(x)$ and $y''_\lambda(x)$ are entire functions of λ.

Proof. I. Fix any complex number λ. First we shall prove that

$$(1) \quad \begin{cases} y_\lambda \text{ satisfies the conditions (i), (ii) if and only if} \\ y_\lambda(x) = a + bx + \int\limits_0^x (x-t)\,[\,q(t) - \lambda\,]\, y_\lambda(t)\, dt \quad \text{for all } x \in [0, +\infty). \end{cases}$$

Let y_λ satisfy (i) and (ii). By (i), $[q(t) - \lambda]\, y_\lambda(t) = y''_\lambda(t)$ for all $t \in [0, +\infty)$. Hence it follows successively that y_λ, y''_λ and y'_λ are continuous on $[0, +\infty)$. Integrating both sides of the last formula from 0 to x and using (ii) we obtain

$$\int_0^x [q(t) - \lambda]\, y_\lambda(t)dt = \int_0^x y''_\lambda(t)dt = y'_\lambda(x) - y'_\lambda(0) \overset{(ii)}{=} y'_\lambda(x) - b$$

$$\text{for all } x \in [0, +\infty).$$

Writing u instead of x, integrating both sides from 0 to x, and using (ii), we obtain

$$\int_0^x \left\{ \int_0^u [q(t) - \lambda]\, y_\lambda(t)dt \right\} du = \int_0^x y'(u)du - bx = y_\lambda(x) - y_\lambda(0) - bx \overset{(ii)}{=}$$

$$\overset{(ii)}{=} y_\lambda(x) - (a+bx) \qquad \text{for all } x \in [0, +\infty).$$

Hence it follows by integration by parts that

$$y_\lambda(x) = a + bx + \int_0^x \left\{ \int_0^u [q(t) - \lambda]\, y_\lambda(t)dt \right\} du = \left| \begin{array}{ll} A(u) = \int_0^u [q(t) - \lambda]\, y_\lambda(t)dt, & B'(u) = 1 \\ A'(u) = [q(u) - \lambda]\, y_\lambda(u), & B(u) = u \end{array} \right|$$

$$= a + bx + \left[u \int_0^u [q(t) - \lambda]\, y_\lambda(t)dt \right]_{u=0}^{x} - \int_0^x t\, [\lambda \quad q(t)]\, y_\lambda(t)dt =$$

$$= a + bx + \int_0^x (x-t)\, [q(t) - \lambda]\, y_\lambda(t)dt \qquad \text{for all } x \in [0, +\infty)$$

so that y_λ satisfies the integral equation in (1).

Let y satisfy the integral equation in (1). Then

$$\left.\begin{aligned} y_\lambda(x) &= a + bx + x\int_0^x \left[q(t) - \lambda\right] y_\lambda(t)dt - \int_0^x t\left[q(t) - \lambda\right] y_\lambda(t)dt \\ y'(x) &= b + \int_0^x \left[q(t) - \lambda\right] y_\lambda(t)dt \\ y''(x) &= \left[q(x) - \lambda\right] y_\lambda(x) \end{aligned}\right\} \text{ for all } x \in [0,+\infty).$$

so that y_λ also satisfies the conditions (i) and (ii).

This completes the proof of statement (1).

Now consider the sequence of functions

$$(2)\quad \begin{cases} y_{0,\lambda}(x) = a + bx & \text{for } x \in [0,+\infty), \\ y_{k,\lambda}(x) = a + bx + \int_0^x (x-t)\left[q(t) - \lambda\right] y_{k-1,\lambda}(t)dt & \text{for } x \in [0,+\infty),\ k = 1,2, \end{cases}$$

Obviously

$$(3)\quad \begin{cases} y_{1,\lambda}(x) - y_{0,\lambda}(x) \overset{(2)}{=} \int_0^x (x-t)\left[q(t) - \lambda\right] y_{0,\lambda}(t)dt & \text{for } x \in [0,+\infty), \\ y_{k+1,\lambda}(x) - y_{k,\lambda}(x) = \int_0^x (x-t)\left[q(t) - \lambda\right]\left[y_{k,\lambda}(t) - y_{k-1,\lambda}(t)\right]dt & \\ \qquad \text{for } x \in [0,+\infty),\ k = 1,2,\ldots\ . & \end{cases}$$

Using the notation in (3) we shall prove by induction that

$$(4)\quad \begin{cases} \left| y_{k,\lambda}(x) - y_{k-1,\lambda}(x) \right| \leq (|a| + |b|x) \dfrac{[m(x) + |\lambda|]^k x^{2k}}{(2k)!} \\ \\ \text{for} \quad x \in [0,+\infty), \quad k = 1,2,\dots \ . \end{cases}$$

Let $k = 1$. Then

$$\left| y_{1,\lambda}(x) - y_{0,\lambda}(x) \right| \overset{(3)}{\leq} \int_0^x (x-t) \left| q(t) - \lambda \right| \left| y_{0,\lambda}(t) \right| dt \overset{3),(2)}{\leq}$$

$$\overset{3),(2)}{\leq} \int_0^t (x-t) \left[m(t) + |\lambda| \right] (|a| + |b|t) dt \leq (|a| + |b|x) \left[m(x) + |\lambda| \right] \int_0^x (x-t) dt =$$

$$= (|a| + |b|x) \frac{[m(x) + |\lambda|] x^2}{2!} \qquad \text{for} \quad x \in [0,+\infty)$$

so that (4) holds for $k = 1$. Let (4) hold for a fixed $k = 1,2,\dots$. Then, by (3),

$$\left| y_{k+1,\lambda}(x) - y_{k,\lambda}(x) \right| \overset{(3)}{\leq} \int_0^x (x-t) \overbrace{\left| q(t) - \lambda \right|}^{\leq m(t)+|\lambda|} \left| y_{k,\lambda}(t) - y_{k-1,\lambda}(t) \right| dt \overset{\text{ind.ass.}}{\leq}$$

$$\overset{\text{ind.ass}}{\leq} \int_0^x (x-t) \left[m(t) + |\lambda| \right] (|a| + |b|t) \frac{[m(t) + |\lambda|]^k t^{2k}}{(2k)!} dt \leq$$

$$\leq (|a| + |b|x) \frac{[m(x)+|\lambda|]^{k+1}}{(2k)!} \int_0^x (x-t)\, t^{2k}\, dt =$$

$$= (|a| + |b|x) \frac{[m(x)+|\lambda|]^{k+1}}{(2k)!} \frac{x^{2k+2}}{(2k+1)(2k+2)} = (|a| + |b|x) \frac{[m(x)+|\lambda|]^{k+1} x^{2k+2}}{(2k+2)!}$$

for all $x \in [0,+\infty)$

so that (4) holds for k + 1. This completes the proof of (4).

By (4),

$$(5) \quad \begin{cases} \text{the series } y_{0,\lambda}(x) + \sum_{k=1}^{+\infty} [y_{k,\lambda}(x) - y_{k-1,\lambda}(x)] \text{ has a convergent majorant} \\ (|a| + |b|x) \sum_{k=0}^{+\infty} \frac{[\sqrt{m(x)+|\lambda|}\, x]^{2k}}{(2k)!} \leq (|a| + |b|x)\, e^{\sqrt{m(x)+|\lambda|}\, x} \\ \text{for all } x \in [0,+\infty). \end{cases}$$

Observe that the (n+1)-th partial sum of the first series in (5) is $y_{n,\lambda}(x)$. Therefore, by (5) and the Weierstrass test,

$$(6) \quad \begin{cases} \text{there exists } y_\lambda \text{ such that} \\ y_\lambda(x) = y_{0,\lambda}(x) + \sum_{k=1}^{+\infty} [y_{k,\lambda}(x) - y_{k-1,\lambda}(x)] = \lim_{n\to+\infty} y_{n,\lambda}(x) \\ \text{for all } x \in [0,+\infty), \end{cases}$$

(7) $$|y_\lambda(x)| \leq (|a| + |b|x)\, e^{\sqrt{m(x)+|\lambda|}\, x} \quad \text{for all } x \in [0,+\infty).$$

By (5), for any fixed $x_0 \in [0,+\infty)$, the first series in (5) has a convergent majorant

$$(|a| + |b|x_0) \sum_{k=0}^{+\infty} \frac{\left[\sqrt{m(x_0)+|\lambda|}\; x_0\right]^{2k}}{(2k)!} \quad \text{for all } x \in [0,x_0].$$

Consequently, by (5) and the Weierstrass test,

(8) $$\begin{cases} \text{for any fixed } x_0 \in [0,+\infty) \\ y_\lambda(x) = y_{0,\lambda}(x) + \sum_{k=1}^{+\infty} \left[y_{k,\lambda}(x) - y_{k-1,\lambda}(x) \right] = \lim_{n\to+\infty} y_{n,\lambda}(x) \\ \text{uniformly for all } x \in [0,x_0]. \end{cases}$$

Given any $x \in [0,+\infty)$ we fix x_0 such that $x \leq x_0 < +\infty$, and let $k \to +\infty$ in (2). By (2) and (8) we obtain

(9) $$y_\lambda(x) = a + bx + \int_0^x (x-t)\left[q(t) - \lambda\right] y_\lambda(t)\,dt \quad \text{for all } x \in [0,+\infty).$$

By (9) and (1),

(10) y_λ satisfies the conditions (i) and (ii).

Suppose that also

(11) z_λ satisfies the conditions (i) and (ii).

By (11) and (1),

$$(12) \qquad z_\lambda(x) = a + bx + \int_0^x (x-t)\,[q(t)-\lambda]\; z_\lambda(t)dt \qquad \text{for all } x \in [0,+\infty).$$

Subtracting (9) from (12) we obtain

$$(13) \qquad z_\lambda(x) - y_\lambda(x) = \int_0^x (x-t)\,[q(t)-\lambda]\,[z_\lambda(t) - y_\lambda(t)]\,dt \qquad \text{for all } x \in [0,+\infty).$$

Next let

$$(14) \qquad z(x_1) \neq y(x_1) \qquad \text{for some } x_1 \in [0,+\infty).$$

Since, by (i), both y_λ and z_λ are continuous on $[0,+\infty)$ it follows from (14) that there exists a non-negative number x_0 such that $z_\lambda(t) = y_\lambda(t)$ for all $t \in [0,x_0]$. By (14), $0 \leq x_0 < x_1$. By (13) and the definition of x_0,

$$(15) \qquad z_\lambda(x) - y_\lambda(x) = \int_0^x (x-t)\,[q(t)-\lambda]\,[z_\lambda(t) - y_\lambda(t)]\,dt \qquad \text{for all } x \in [x_0,+\infty).$$

Next set

$$(16) \qquad M(x) = \max_{x_0 \leq t \leq x} |z_\lambda(t) - y_\lambda(t)| \qquad \text{for all } x \in [x_0,+\infty).$$

The continuity of y_λ and z_λ in $[0,+\infty)$, and the definition of x_0 imply that

$$(17) \qquad M(x) \in (0,+\infty) \qquad \text{for all } x \in (x_0,+\infty).$$

By (15) and (16), $|z_\lambda(x) - y_\lambda(x)| \leq M(x) \int_{x_0}^{x} (x-t)\,|q(t)-\lambda|\,dt$

for all $x \in [x_0, +\infty)$. Consequently, by (16),

(18) $$M(x) \leq M(x) \int_{x_0}^{x} (x-t)\,|q(t)-\lambda|\,dt \qquad \text{for all } x \in [x_0, +\infty).$$

If $\delta \in (0, +\infty)$ is sufficiently small, then $\int_{x_0}^{x} (x-t)\,|q(t)-\lambda|\,dt < 1$

for all $x \in (x_0, x_0+\delta)$ so that, by (18), $M(x) < M(x)$ for each $x \in (x_0, x_0+\delta)$, which is a contradiction. Consequently the assumption (14) is not possible. Therefore, by (11) and (14),

(19) y_λ is the unique function satisfying (i) and (ii),

which completes the proof of I.

II. Immediately follows from (7).

III. Fix any $x \in [0, +\infty)$. It follows successively from (2) that $y_{k,\lambda}(x)$ are polynomials in λ $(k = 0,1,\ldots)$. Consequently

(20) $y_{k,\lambda}(x)$ is an entire function of λ $(k = 0,1,\ldots)$.

By (5), for any fixed $L \in (0, +\infty)$ the first series in (5) has a convergent majorant $(|a| + |b|x) \sum_{k=0}^{+\infty} \frac{[\sqrt{m(x)+L}\; x]^{2k}}{(2k)!}$ for all $|\lambda| \leq L$.

Consequently, by (5) and the Weierstrass test,

$$(21)\quad \begin{cases} \text{for any fixed } L \in (0,+\infty) \\ y_\lambda(x) = y_{0,\lambda}(x) + \sum_{k=1}^{+\infty} \left[y_{k,\lambda}(x) - y_{k-1,\lambda}(x) \right] = \lim_{n\to+\infty} y_{k,\lambda}(x) \\ \text{uniformly for all } |\lambda| \leq L. \end{cases}$$

By (20), (21) and the Weierstrass theorem,

(22) $y_\lambda(x)$ is an entire function of λ .

By (22) and (i),

(23) $y''_\lambda(x)$ is an entire function of λ .

In the sequel let $x \in (-\infty,+\infty)$. Denoting the even extension of q from $[0,+\infty)$ into $(-\infty,+\infty)$ again by q , it follows from 2) that

(29) q is even, continuous on $(-\infty,+\infty)$.

Set

(25) $m(\pm x) = \max_{-x\leq t\leq x} |q(t)|$ for all $x \in [0,+\infty)$,

$$
(26)\quad \begin{cases}
y_{0,\lambda}(x) = a + bx \qquad \text{for } x \in (-\infty,+\infty), \\
y_{k,\lambda}(x) = a + bx + \int_0^x (x-t)\left[q(t)-\lambda\right] y_{k-1,\lambda}(t)dt = \\
\qquad = a + bx + x\int_0^x \left[q(t)-\lambda\right] y_{k-1,\lambda}(t)dt - \int_0^x t\left[q(t)-\lambda\right] y_{k-1,\lambda}(t)dt \\
\qquad \text{for } x \in (-\infty,+\infty), \quad k = 1,2,\ldots,
\end{cases}
$$

so that

$$
\begin{aligned}
y'_{0,\lambda}(x) &= b, && \text{for } x \in (-\infty,+\infty), \\
y'_{k,\lambda}(x) &= b + \int_0^x \left[q(t)-\lambda\right] y_{k-1,\lambda}(t)dt && \text{for } x \in (-\infty,+\infty),\ k = 1,2,\ldots .
\end{aligned}
$$

Consequently

$$
(27)\quad \begin{cases}
y'_{1,\lambda}(x) - y'_{0,\lambda}(x) = \int_0^x \left[q(t)-\lambda\right] y_{0,\lambda}(t)dt \qquad \text{for } x \in (-\infty,+\infty) \\
y'_{k+1,\lambda}(x) - y'_{k,\lambda}(x) = \int_0^x \left[q(t)-\lambda\right]\left[y_{k,\lambda}(t) - y_{k-1,\lambda}(t)\right] dt \quad \text{for } x \in (-\infty,+\infty) \\
\qquad k = 1,2,\ldots,
\end{cases}
$$

In the same way as in (4) we obtain

$$
(28)\quad \begin{cases}
\left| y_{k,\lambda}(x) - y_{k-1,\lambda}(x)\right| \leq (|a| + |b||x|)\ \dfrac{\left[m(x)+|\lambda|\right]^k x^{2k}}{(2k)!} \\
\qquad \text{for } x \in (-\infty,+\infty), \quad k = 1,2,\ldots .
\end{cases}
$$

By (27), (25) and (28),

$$
(29)\quad \begin{cases}
\left| y'_{k+1,\lambda}(x) - y'_{k,\lambda}(x) \right| \overset{(27)}{\leq} \left| \int_0^x |q(t)-\lambda|\,|y_{k,\lambda}(t) - y_{k-1,\lambda}(t)|\,dt \right| \overset{(27),(28)}{\leq} \\[2ex]
\leq \left| \int_0^x [m(t)+|\lambda|]\,[|a| + |b||t|]\,\dfrac{[m(t)+|\lambda|]^k t^{2k}}{(2k)!}\,dt \right| \leq \\[2ex]
\leq (|a| + |b||x|)\,\dfrac{[m(x)+|\lambda|]^{k+1} x^{2k}}{(2k)!} \left| \int_0^x dt \right| = \\[2ex]
= (|a| + |b||x|)\,\dfrac{[m(x)+|\lambda|]^{k+1}\,|x|^{2k+1}}{(2k)!} = \\[2ex]
= |x|\,(|a| + |b||x|)\,[m(x)+|\lambda|]\,\dfrac{[m(x)+|\lambda|]^k\, x^{2k}}{(2k)!} \\[2ex]
\qquad \text{for all } x \in (-\infty,+\infty),\quad k = 1,2,\ldots\ .
\end{cases}
$$

By (29), for any fixed $x_0 \in [0,+\infty)$ the series $\sum_{k=1}^{+\infty} [y'_{k+1,\lambda}(x) - y'_{k,\lambda}(x)]$ has a convergent majorant $|x_0|\,(|a| + |b||x_0|)\,[m(x_0)+|\lambda|] \sum_{k=1}^{+\infty} \dfrac{[m(x_0)+|\lambda|]^k\,|x_0|^{2k}}{(2k)!}$ for all $x \in [-x_0,x_0]$. Consequently, by the Weierstrass test, the series $y'_{0,\lambda}(x) + \sum_{k=1}^{+\infty} [y'_{k,\lambda}(x) - y'_{k-1,\lambda}(x)]$ converges uniformly in every bounded and closed subinterval of $(-\infty,+\infty)$ so that, by a well-known theorem, the expansion (6) may be differentiated term-by-term. Hence,

(31) $$y'_{\lambda}(x) = y'_{0,\lambda}(x) + \sum_{k=1}^{+\infty} \left[y'_{k,\lambda}(x) - y'_{k-1,\lambda}(x) \right] \quad \text{for all} \quad x \in [0,+\infty).$$

Now fix any $x \in [0,+\infty)$. It follows succesively from (26) and (27) that the terms of the series in (31) are polynomials in λ. Consequently

(32) $y'_{0,\lambda}(x)$, $y'_{k,\lambda}(x) - y'_{k-1,\lambda}(x)$ $(k = 1,2,\ldots)$ are entire functions of λ.

By (29), for any fixed $L \in (0,+\infty)$ the series $\sum_{k=1}^{+\infty} \left[y'_{k+1,\lambda}(x) - y'_{k,\lambda}(x) \right]$ has a convergent majorant $x(|a| + |b|x) \left[m(x)+L \right] \sum_{k=1}^{+\infty} \frac{\left[m(x)+L \right]^k x^{2k}}{(2k)!}$ for all $|\lambda| \leq L$. Consequently, by the Weierstrass test,

(33) $\begin{cases} \text{for any fixed } L \in (0,+\infty) \text{ the series in (31) converges uniformly} \\ \text{for all } |\lambda| \leq L. \end{cases}$

By (32), (33) and the Weierstrass theorem,

(34) $y'_{\lambda}(x)$ is an entire function of λ.

But (22), (23) and (34) complete the proof of III.

<u>2. Theorem</u>. <u>Suppose:</u>

1) $\alpha, \beta \in [0,\pi)$, $b \in (0,+\infty)$.

2) q <u>is a real, continuous function on</u> $[0,b]$.

3) $Ay = -y'' + qy$ <u>for all functions</u> y <u>with a continuous second derivative on</u> $[0,+\infty)$.

4) For every complex λ, y_λ is the solution of $Ay = \lambda y$ such that $y_\lambda(0) = \cos\alpha$, $y'_\lambda(0) = \sin\alpha$. (By 1., such a solution exists and is uniquely determined.)

5) $B^2(0,b)$ is the set of all functions $y \in C^2(a,b)$ such that

$$y(0)\sin\alpha - y'(0)\cos\alpha = 0,$$

$$y(b)\cos\beta + y'(b)\sin\alpha = 0.$$

(Consequently, $B^2(0,b)$ is a linear subspace of $C^2(0,b) \subset L^2(0,b)$.)

6) A_b is the restriction of A to $B^2(0,b)$.

Then the following holds:

I. $(Ay,z) = (y,Az)$ for all $y,z \in B^2(0,b)$.

II. The set of all eigenvalues of A_b is real, infinite and countable, and does not have any finite cluster points. The eigenfunctions of A_b corresponding to distinct eigenvalues of A_b are orthogonal.

III. Let $\lambda_1, \lambda_2, \ldots$ be the eigenvalues of A_b, and z_k be an eigenfunction of A_b corresponding to λ_k with $\|z_k\|_{L^2(0,b)} = 1$ $(k = 1,2,\ldots)$. Then:

(i) For each $k = 1,2,\ldots$, there exists a number r_k such that $z_k(x) = r_k\, y_{\lambda_k}(x)$ for all $x \in [0,b]$.

(ii) For each $k = 1,2,\ldots$, y_{λ_k} is a solution of the boundary problem $Ay = \lambda_k y$, $y \in B^2(0,b)$.

(iii) For each $k = 1,2,\ldots$, the eigenspace L_{A_b,λ_k} is one-dimensional.

(iv) <u>For each</u> $k = 1,2,\ldots,$ <u>the absolute value</u> $|r_k|$ <u>of</u> r_k <u>in</u> (i) <u>is uniquely determined.</u>

<u>Proof.</u> I. Let $y,z \in B^2(0,b)$. Then, by 5), there exist constants h_y, k_y, h_z, k_z such that

$$(1)\quad \begin{cases} y(0) = h_y \cos\alpha,\ y'(0) = h_y \sin\alpha;\ z(0) = h_z \cos\alpha,\ z'(0) = h_z \sin\alpha, \\ y(b) = k_y \sin\beta,\ y'(b) = -k_y \cos\beta;\ z(b) = k_z \sin\beta,\ z'(b) = -k_z \cos\beta. \end{cases}$$

Since $y,z \in B^2(0,b) \overset{5)}{\subset} C^2(0,b)$ we have

$$(Ay,z) - (y,Az) \overset{2),3)}{=}$$

$$\overset{2),3)}{=} \int_0^b \left[-y''(x) + q(x)\, y(x)\right] \overline{z(x)}\,dx - \int_0^b y(x) \left[-\overline{z''(x)} + q(x)\, \overline{z(x)}\right] dx =$$

$$= \int_0^b \left[y(x)\, \overline{z''(x)} - y''(x)\, \overline{z(x)}\right] dx = \int_0^b \left[y(x)\, \overline{z'(x)} - y'(x)\, \overline{z(x)}\right]' dx =$$

$$= \left[y(x)\, \overline{z'(x)} - y'(x)\, \overline{z(x)}\right]_{x=0}^{b} \overset{(1)}{=} 0.$$

II. Follows from I. and 37.6.

III. (i) See Coddington and Levinson (4) p. 231.

(ii) By assumption and 37.1, z_k is a function in $C^2(0,b)$ not identically equal to zero. This fact and (i) imply $r_k \neq 0$ so that, by (i), $y_{\lambda_k}(x) = \frac{1}{r_k}\, z_k(x)$ for all $x \in [0,b]$. Consequently, by 5),

$y_{\lambda_k} \in B^2(0,b)$. Hence, by 6), $Ay_{\lambda_k} \overset{6)}{=} A_b y_{\lambda_k} = \lambda_k y_{\lambda_k}$, which proves (ii).

(iii) Follows from (i) and (ii).

(iv) Let z_k^* be another eigenfunction of A_b corresponding to the eigenvalue λ_k with $\| z_k^* \|_{L^2(0,b)} = 1$. Then, by (i), there exists a number r_k^* such that $z_k^*(x) = r_k^* y_{\lambda_k}(x)$ for all $x \in [0,b]$. Hence

$$| r_k^* | \, \| y_{\lambda_k} \|_{L^2(0,b)} = \| z_k^* \|_{L^2(0,b)} = 1 = \| z_k \|_{L^2(0,b)} \overset{(i)}{=} | r_k | \, \| y_{\lambda_k} \|_{L^2(0,b)}.$$

Since, by 4), y_{λ_k} is not identically equal to zero on $[0,b]$, it follows that $| r_k^* | = | r_k |$, which completes the proof.

<u>3. Definition</u>. <u>Suppose</u>:

1)-6) <u>as in</u> 2.

7) $\lambda_1, \lambda_2, \ldots$ <u>and</u> $r_1, r_2, \ldots,$ <u>as in</u> III. <u>in</u> 2.

8) <u>The function</u> ρ_b <u>satisfies the following conditions</u>:

(i) $\rho_b(0) = 0$.

(ii) ρ_b <u>is constant between each two neighboring eigenvalues of</u> A_b.

(iii) ρ_b <u>is right-continuous in</u> $(-\infty, +\infty)$.

(iv) $\rho_b(\lambda_k) - \rho_b(\lambda_k -) = | r_k |^2 \quad (k = 1,2,\ldots)$.

(Obviously ρ_b is a right-continuous non-decreasing step function on $(-\infty, +\infty)$ and, by (iv) in III. in 2., the conditions in 8) determine ρ_b uniquely.)

Then ρ_b is said to be the spectral function of the operator A_b.

4. The H. Weyl theorem. Suppose:

1) q is a real continuous function on $[0,+\infty)$.

2) $A_y = -y'' + qy$ for all functions y with a continuous second derivative on $[0,+\infty)$.

3) For some $\lambda_0 \in K$, all solutions of $Ay = \lambda_0 y$ belong to $L^2(0,+\infty)$.

Then, for every $\lambda \in K$, all solutions of $Ay = \lambda y$ belong to $L^2(0,+\infty)$.

Proof see Coddington and Levinson (4), p. 225.

5. Definition. Suppose:

1) q is a real continuous function on $[0,+\infty)$.

2) $Ay = -y'' + qy$ for all functions y with a continuous second derivative on $[0,+\infty)$.

If for some $\lambda \in K$ (and thus, by 4., for all $\lambda \in K$) all solutions of $Ay = \lambda y$ belong to $L^2(0,+\infty)$ the operator A is said to be of the limit circle type at infinity. Otherwise A is said to be of the limit point type at infinity.

6. Remark. The terms "limit circle or limit point type at infinity" may be interpreted geometrically as explained in Coddington and Levinson (4) p. 225. However we will not need this geometrical interpretation in the sequel.

7. Theorem. Suppose:

1) q is a real continuous function on $[0,+\infty)$.

2) There exist $k,\ x_0 \in (0,+\infty)$ such that $q(x) \geq -k\,x^2$ for all $x \in (x_0,+\infty)$.

3) $Ay = -y'' + qy$ for all functions y with a continuous second derivative on $[0,+\infty)$.

Then A is of the limit point type at infinity.

Proof see Coddington and Levinson (4), p. 231.

8. Theorem. Suppose:

1) $\alpha,\beta \in [0,\pi)$.

2) q is a real continuous function on $[0,+\infty)$.

3) $Ay = -y'' + qy$ for all functions y with continuous second derivative on $[0,+\infty)$.

4) A is of the limit point type at infinity (see 5.1).

5) For every complex λ, y_λ is the solution of $Ay = \lambda y$ such that $y_\lambda(0) = \cos\alpha$, $y'_\lambda(0) = \sin\alpha$. (By 1., such a solution exists and is uniquely determined.)

6) For every $b \in (0,+\infty)$, $B^2(0,b)$ is the set of all functions $y \in C^2(0,b)$ such that

$$y(0)\sin\alpha - y'(0)\cos\alpha = 0,$$

$$y(b)\cos\beta + y'(b)\sin\beta = 0$$

(so that $B^2(0,b)$ is a linear subspace of $C^2(0,b) \subset L^2(0,b)$), A_b is the restriction of A to $B^2(0,b)$, and ρ_b is the spectral function of A_b (see 3.1).

Then every sequence $b_1, b_2, \dots$ such that $1 < b_1 < b_2 < \dots$, $\lim_{n \to +\infty} b_n = +\infty$, has a subsequence $b_{n_1}, b_{n_2}, \dots$ such that $\rho(t) = \lim_{k \to +\infty} \rho_{b_{n_k}}(t)$ is a non-decreasing function on $(-\infty, +\infty)$.

Proof see Coddington and Levinson (4), p. 234-235.

9. Definition. Suppose 1)-6) as in 8. Then every non-decreasing function ρ on $(-\infty, +\infty)$ constructed in the manner described in 8. is said to be a limiting spectral function of A.

10. Theorem. Suppose:

1)-6) as in 8.

7) ρ, σ are any two limiting spectral functions of A (i.e. constructed in the way as described in 8. for different β, different $b_1, b_2, \dots$ or different $b_{n_1}, b_{n_2}, \dots$).

Then the following holds:

I. ρ, σ have the same points of discontinuity.

II. There exists a real constant c such that

$$\sigma(t-) - \rho(t-) = c, \quad \sigma(t+) - \rho(t+) = c \quad \text{for all } t \in (-\infty, +\infty).$$

III. If ρ is continuous at $t_1, t_2 \in (-\infty, +\infty)$ then

$$\lim_{b \to +\infty} \left[\rho_b(t_2) - \rho_b(t_1) \right] = \rho(t_2) - \rho(t_1).$$

IV. If we normalize the limiting spectral function by requiring it to be right-continuous and to satisfy $\rho(0) = 0$, then it is unique.

Proof again follows from Coddington and Levinson (4).

Note: We assume the limiting spectral function is normalized in the sequel.

11. Theorem. Suppose:

1) $\alpha \in [0,\pi)$.

2) q is a real continuous function on $[0,+\infty)$.

3) $Ay = -y'' + qy$ for all functions y with a continuous second derivative on $[0,+\infty)$.

4) A is of the limit point type at infinity (see 5.!).

5) For every complex λ, y_λ is the solution of $Ay = \lambda y$ such that $y_\lambda(0) = \cos\alpha$, $y'_\lambda(0) = \sin\alpha$. (By 1., such a solution exists and is uniquely determined.)

6) ρ is the (unique) limiting spectral function of A (see 9., 10.).

7) $f \in L^2(0,+\infty)$.

Then there exists a function g with the following properties:

I. $$\int_0^{+\infty} |f(t)|^2\,dt = \int_{-\infty}^{+\infty} |g(\lambda)|^2\,d\rho(\lambda)$$ (the Parceval equality),

II. $$\lim_{T\to+\infty} \int_{-\infty}^{+\infty} \left| g(\lambda) - \int_0^T f(t)\,y_\lambda(t)\,dt \right|^2 d\rho(\lambda) = 0$$

(the completeness relation),

III. $$\lim_{\substack{A \to -\infty \\ B \to +\infty}} \int_0^{+\infty} \left| f(t) - \int_A^B g(\lambda)\, y_\lambda(t)\, d\rho(\lambda) \right|^2 dt = 0$$

(<u>the expansion formula</u>).

<u>In all cases the integrals with</u> $d\rho(\lambda)$ <u>are to be interpreted as Lebesgue-Stieltjes integrals.</u>

<u>Proof</u>. See Coddington and Levinson (4), p. 232.

<u>12. Theorem</u>. <u>Suppose</u>:

1) $\alpha \in [0,\pi)$, $\lambda_0 \in (-\infty,+\infty)$.

2) q <u>is a real continuous function on</u> $[0,+\infty)$.

3) $Ay = -y'' + qy$ <u>for all functions with a continuous second derivative on</u> $[0,+\infty)$.

4) A <u>is of the limit point case at infinity</u> (see 5.!).

5) <u>For every complex</u> λ, y_λ <u>is the solution of</u> $Ay = \lambda y$ <u>such that</u> $y_\lambda(0) = \cos\alpha$, $y'_\lambda(0) = \sin\alpha$. (By 1., such a solution exists and is uniquely determined.)

6) ρ <u>is the (unique) limiting spectral function of</u> A. (By 8. and 9., ρ is non-decreasing on $(-\infty,+\infty)$.)

7) ρ <u>is discontinuous at</u> λ_0.

<u>Then</u> y_{λ_0} <u>is real on</u> $[0,+\infty)$, <u>and</u> $0 < \int_0^{+\infty} |y_{\lambda_0}(t)|^2\, dt \leq$

$$\leq \frac{1}{\rho(\lambda_0+) - \rho(\lambda_0-)} < +\infty .$$

<u>Proof</u>. Fix any $T_0 \in (0,+\infty)$. Let

(1) $\quad f \in L^2(0,+\infty), \quad f(t) = 0 \qquad \text{for all} \quad t \in (T_0,+\infty).$

By 11., there exists a function g with the following properties:

(2) $$\int_{-\infty}^{+\infty} |g(\lambda)|^2 \, d\rho(\lambda) < +\infty,$$

(3) $$\lim_{T \to +\infty} \int_{-\infty}^{+\infty} \left| g(\lambda) - \int_0^T f(t)\, y_\lambda(t)dt \right|^2 d\rho(\lambda) = 0,$$

(4) $$\int_0^{+\infty} |f(t)|^2 \, dt = \int_{-\infty}^{+\infty} |g(\lambda)|^2 \, d\rho(\lambda).$$

By (1) and (3), to each $\varepsilon \in (0,+\infty)$ there exists $T_1 \in [T_0,+\infty)$ such that

$$\int_{-\infty}^{+\infty} \left| g(\lambda) - \int_0^{T_0} f(t)\, y_\lambda(t)dt \right|^2 d\rho(\lambda) = \int_{-\infty}^{+\infty} \left| g(\lambda) - \int_0^{T} f(t)\, y_\lambda(t)\, dt \right|^2 d\rho(\lambda) < \varepsilon$$

for all $T \in (T_1,+\infty)$.

Since $\varepsilon \in (0,+\infty)$ may be arbitrarily small it follows

$$\int_{-\infty}^{+\infty} \left| g(\lambda) - \int_0^{T_0} f(t)\, y_\lambda(t)\, dt \right|^2 d\rho(\lambda) = 0.$$

Hence

(5) $$g(\lambda) = \int_0^{T_0} f(t)\, y_\lambda(t)dt \qquad \text{for} \quad \rho\text{-almost all} \quad \lambda \in (-\infty,+\infty).$$

Since, by 6), 8., 9. and 7), ρ is non-decreasing on $(-\infty,+\infty)$ and discontinuous at λ_0 the singleton set $\{\lambda_0\}$ has ρ-measure

$$(6) \qquad \int_{\{\lambda_0\}} d\rho(\lambda) = \rho(\lambda_0+) - \rho(\lambda_0-) > 0.$$

Hence it follows indirectly in view of (5) that

$$(7) \qquad g(\lambda_0) = \int_0^{T_0} f(t)\, y_{\lambda_0}(t)dt.$$

By (4) and (1),

$$(8) \begin{cases} |g(\lambda_0)|^2 [\rho(\lambda_0+) - \rho(\lambda_0-)] = \int_{\{\lambda_0\}} |g(\lambda)|^2 d\rho(\lambda) \leq \\ \leq \int_{-\infty}^{+\infty} |g(\lambda)|^2 d\rho(\lambda) \overset{(4)}{=} \int_0^{+\infty} |f(t)|^2 dt \overset{(1)}{=} \int_0^{T_0} |f(t)|^2 dt. \end{cases}$$

Now consider the function

$$(9) \qquad f(t) = \begin{cases} y_{\lambda_0}(t) & \text{for all } t \in [0,T_0], \\ 0 & \text{for all } t \in (T_0,+\infty). \end{cases}$$

By 5), the function (9) satisfies condition (1) so that all the preceeding results remain true. Next, by 1)-3) and 5), y_{λ_0} is a real function on $[0,+\infty)$. Therefore, by (7) and (9),

$$(10) \qquad g(\lambda_0) \overset{(7),(9)}{=} \int_0^{T_0} y_{\lambda_0}^2(t)dt = \int_0^{T_0} |y_{\lambda_0}(t)|^2 dt.$$

Setting (9) and (10) into (8) we obtain

$$(11) \qquad \left[\int_0^{T_0} |y_{\lambda_0}(t)|^2 dt\right]^2 \left[\rho(\lambda_0+) - \rho(\lambda_0-)\right] \leq \int_0^{T_0} |y_{\lambda_0}(t)|^2 dt.$$

By 5), y_{λ_0} is a continuous function on $[0,T_0]$ not identically equal to zero on $[0,T_0]$ so that $\int_0^{T_0} |y_{\lambda_0}(t)|^2 dt > 0$. This and (6) make it possible to divide both sides of (11) by the product

$\left[\int_0^{T_0} |y_{\lambda_0}(t)|^2 dt\right] \left[\rho(\lambda_0+) - \rho(\lambda_0-)\right]$. Hence

$$(12) \qquad 0 < \int_0^{T_0} |y_{\lambda_0}(t)|^2 dt \leq \frac{1}{\rho(\lambda_0+) - \rho(\lambda_0-)} < +\infty.$$

But $T_0 \in (0,+\infty)$ was arbitrary, the left-hand side is a non-decreasing function of T_0, and the right-hand side of (12) does not depend on T_0. Therefore letting T_0 tend to $+\infty$ we obtain

$$0 < \int_0^{+\infty} |y_{\lambda_0}(t)|^2 dt \leq \frac{1}{\rho(\lambda_0+) - \rho(\lambda_0-)} < +\infty,$$

which completes the proof.

13. Theorem. Suppose:

1) $\alpha \in [0,\pi)$.

2) q is a real continuous function on $[0,+\infty)$.

3) $\lim_{t\to+\infty} q(t) = +\infty$.

4) $Ay = -y'' + qy$ for all functions y with a continuous second derivative on $[0,+\infty)$.

(By 2), 3), 4), and 7., A is of the limit point type at infinity.)

5) For every complex λ, y_λ is the solution of $Ay = \lambda y$ such that $y_\lambda(0) = \cos\alpha$, $y'_\lambda(0) = \sin\alpha$.

(By 1., such a solution exists and is uniquely determined.)

6) ρ is the (unique) limiting spectral function of A (see 9.,10.)

Then there exists a sequence $\lambda_0, \lambda_1, \ldots$ with the following properties:

I. $-\infty < \lambda_0 < \lambda_1 < \ldots < +\infty$, $\lim_{k\to+\infty} \lambda_k = +\infty$,

ρ is constant on each of the intervals $(-\infty, \lambda_0)$, $(\lambda_0, \lambda_1), \ldots,$

ρ is discontinuous at $\lambda_0, \lambda_1, \ldots$.

II. y_{λ_k} is real on $[0,+\infty)$, $0 < \int_0^{+\infty} |y_{\lambda_k}(t)|^2\, dt =$

$$= \frac{1}{\rho(\lambda_k+) - \rho(\lambda_k-)} < +\infty \text{ for all } k = 0,1,\ldots .$$

III. $y_{\lambda_0}, y_{\lambda_1}, \ldots$ <u>is an orthogonal system on</u> $(0,+\infty)$ <u>with respect to the weight function</u> $w(t) = 1$ <u>on</u> $(0,+\infty)$.

IV. $y_{\lambda_0}, y_{\lambda_1}, \ldots$ <u>is maximal</u> (see 1.25!).

<u>Proof</u>. I. See Coddington and Levinson (4), p. 254.-255., exercise 1., (c) and (d).

II. By I. and 12.,

$$(1)\quad \begin{cases} y_{\lambda_k} \text{ is real on } [0,+\infty), \quad 0 < \displaystyle\int_0^{+\infty} |y_{\lambda_k}(t)|^2\, dt \leq \dfrac{1}{\rho(\lambda_k+) - \rho(\lambda_k-)} \\ \text{for } k = 0,1,\ldots \ . \end{cases}$$

A little later we shall prove that the second inequality in (1) reduces to equality.

III. See Coddington and Levinson (4), p. 254-255, exercise 1.,(d).

IV. Let $f \in L^2(0,+\infty)$. By 11., there exists a function g such that

$$(2)\qquad \int_0^{+\infty} |f(t)|^2\, dt = \int_{-\infty}^{+\infty} |g(\lambda)|^2\, d\rho(\lambda),$$

$$(3)\qquad \lim_{T\to+\infty} \int_{-\infty}^{+\infty} \left| g(\lambda) - \int_0^T f(t)\, y_\lambda(t)\, dt \right|^2 d\rho(\lambda) = 0,$$

$$(4)\qquad \lim_{\substack{A\to-\infty \\ B\to+\infty}} \int_0^{+\infty} \left| f(t) - \int_A^B g(\lambda)\, y_\lambda(t)\, d\rho(\lambda) \right|^2 dt = 0.$$

By I. and the reduction formula for Lebesgue-Stieltjes integrals with respect to a step function,

$$(5)\qquad \int_{-\infty}^{+\infty} |g(\lambda)|^2 \, d\rho(\lambda) = \sum_{k=0}^{+\infty} |g(\lambda_k)|^2 \left[\rho(\lambda_k+) - \rho(\lambda_k-)\right] ,$$

$$(6)\qquad \begin{cases} \displaystyle\int_{-\infty}^{+\infty} \left|g(\lambda) - \int_0^T f(t)\, y_\lambda(t)dt\right|^2 d\rho(\lambda) = \\ \displaystyle = \sum_{k=0}^{+\infty} \left| g(\lambda_k) - \int_0^T f(t)\, y_{\lambda_k}(t)dt\right|^2 \left[\rho(\lambda_k+) - \rho(\lambda_k-)\right] . \end{cases}$$

Setting (5) in (2) we obtain the Parceval equality in the form

$$(7)\qquad \int_0^{+\infty} |f(t)|^2 \, dt = \sum_{k=0}^{+\infty} |g(\lambda_k)|^2 \left[\rho(\lambda_k+) - \rho(\lambda_k-)\right] .$$

By 6), 9. and 8., ρ is a non-decreasing function on $(-\infty, +\infty)$. By I., ρ is discontinuous at $\lambda_0, \lambda_1, \ldots$. Consequently

$$(8)\qquad \begin{cases} \displaystyle 0 \leq \left| g(\lambda_j) - \int_0^T f(t)\, y_{\lambda_j}(t)dt\right|^2 \underbrace{\left[\rho(\lambda_j+) - \rho(\lambda_j-)\right]}_{>0} \leq \\ \displaystyle \leq \sum_{k=0}^{+\infty} \left| g(\lambda_k) - \int_0^T f(t)\, y_{\lambda_k}(t)\, dt\right|^2 \underbrace{\left[\rho(\lambda_k+) - \rho(\lambda_k-)\right]}_{>0} \\ \qquad \text{for all } j = 0,1,\ldots . \end{cases}$$

Since, by (6) and (3), the right-hand side of (8) tends to zero so does the left-hand side. Further, by (1) and the Hölder inequality, $\int_0^{+\infty} f(t)\, y_{\lambda_j}(t)\, dt$ is finite for all $j = 0,1,\ldots$. Therefore

$$(9) \qquad g(\lambda_j) = \lim_{T\to+\infty} \int_0^T f(t)\, y_{\lambda_j}(t)dt = \int_0^{+\infty} f(t)\, y_{\lambda_j}(t)dt \quad \text{for } j = 0,1,\ldots \; .$$

Setting (9) into (7) we obtain the Parceval equality in the form

$$(10) \qquad \int_0^{+\infty} |f(t)|^2\, dt = \sum_{k=0}^{+\infty} \left| \int_0^{+\infty} f(t)\, y_{\lambda_k}(t)dt \right|^2 \left[\rho(\lambda_k+) - \rho(\lambda_k-)\right] .$$

Now fix any $j = 0,1,\ldots$. Since, by (1), $y_{\lambda_j} \in L^2(0,+\infty)$, we may set $f = y_{\lambda_j}$ in (10). Since, by (1), y_{λ_j} is a real function and III. holds we have

$$\int_0^{+\infty} f(t)\, y_{\lambda_k}(t)dt = \int_0^{+\infty} y_{\lambda_j}(t)\, y_{\lambda_k}(t)dt = \begin{cases} \int_0^{+\infty} |y_{\lambda_j}(t)|^2 dt & \text{for } k = j, \\ 0 & \text{for } k \neq j. \end{cases}$$

So we obtain from (10)

$$(11) \qquad \begin{cases} \int_0^{+\infty} |y_{\lambda_j}(t)|^2\, dt = \left[\int_0^{+\infty} |y_{\lambda_j}(t)|^2\, dt \right]^2 \left[\rho(\lambda_j+) - \rho(\lambda_j-)\right]^2 \\ \qquad \text{for } j = 0,1,\ldots \; . \end{cases}$$

Dividing both sides of (11) by $\left[\int_0^{+\infty} |y_{\lambda_j}(t)|^2 dt \right] \left[\rho(\lambda_j+) - \rho(\lambda_j-)\right] \overset{(1)}{>} 0$ we have

$$(12) \qquad \int_0^{+\infty} |y_{\lambda_j}(t)|^2\, dt = \frac{1}{\rho(\lambda_j+) - \rho(\lambda_j-)} \qquad \text{for } j = 0,1,\dots \ .$$

But (1) and (12) complete the proof of II.

Returning to (10) and supposing that $f \in L^2(0,+\infty)$ satisfies the conditions

$$(f, y_{\lambda_k}) = \int_0^{+\infty} f(t)\, \overline{y_{\lambda_k}(t)}\, dt = \int_0^{+\infty} f(t)\, y_{\lambda_k}(t)\, dt = 0 \qquad \text{for } k = 0,1,\dots$$

it follows from (10) that $f(t) = 0$ for almost all $t \in [0,+\infty)$. Consequently, by 1.25, the orthogonal system $y_{\lambda_0}, y_{\lambda_1}, \dots$ on $(0,+\infty)$ is maximal which completes the proof of IV.

<u>14. Theorem</u>. <u>Suppose</u>:

1) $\alpha \in [0,\pi)$.

2) q <u>is a real continuous function on</u> $[0,+\infty)$.

3) $Ay = -y'' + qy$ <u>for all functions</u> y <u>with continuous second derivative on</u> $[0,+\infty)$.

4) A <u>is of the limit circle type at infinity</u> (see 5.!).

5) <u>For every complex</u> λ, y_λ <u>is the solution of</u> $Ay = \lambda y$ <u>such that</u> $y_\lambda(0) = \cos\alpha$, $y'_\lambda(0) = \sin\alpha$.

(By 1., such a solution exists and is uniquely determined.)

6) $1 < b_1 < b_2 < \dots$, $\lim_{n\to+\infty} b_n = +\infty$, $\beta_1, \beta_2, \dots \in [0,\pi)$.

7) <u>For each</u> $n = 1,2,\dots$, $B^2(0,b_n;\beta_n)$ <u>is the set of functions</u> $y \in C^2(0,b_n)$ <u>such that</u>

$$y(0)\sin\alpha - y'(0)\cos\alpha = 0,$$

$$y(b_n)\cos\beta_n - y'(b_n)\sin\beta_n = 0$$

(so that $B^2(0,b_n;\beta_n)$ is a linear subspace of $C^2(0,b_n) \subset L^2(0,b_n)$), A_n is the restriction of A to $B^2(0,b_n;\beta_n)$, and ρ_n is the spectral function of A_n (see 3.!).

Then there exists a subsequence $n_1, n_2, \ldots$ of $1,2,\ldots$ such that $\rho(t) = \lim'_{k\to+\infty} \rho_{n_k}(t)$ is a non-decreasing function on $(-\infty,+\infty)$.

Proof. See Coddington and Levinson (4) p. 242.-244.

15. Definition. Suppose 1)-7) as in 14. Then each non-decreasing function ρ on $(-\infty,+\infty)$ constructed in the way as described in 14. is said to be a limiting spectral function of A.

16. Remark. The situation in the limit circle case at infinity is more complicated than in the limit point case at infinity. No theorem analogous to that in 10. is valid here. For different sequences $b_1, b_2, \ldots$ and $\beta_1, \beta_2, \ldots$ in 6) in 14. or different subsequences $n_1, n_2, \ldots$ in 14. we can obtain essentially different limiting spectral functions ρ of A.

17. Theorem. Suppose:

1) $\alpha \in [0,\pi)$.

2) q is a real continuous function on $[0,+\infty)$.

3) $Ay = -y'' + qy$ for all functions y with a continuous second derivative on $[0,+\infty)$.

4) A <u>is of the limit circle type at infinity</u> (see 5.!).

5) <u>For each complex</u> λ , y_λ <u>is the solution of</u> $Ay = \lambda y$ <u>such that</u> $y_\lambda(0) = \cos\alpha$, $y'_\lambda(0) = \sin\alpha$.

(By 1., such a solution exists and is uniquely determined.)

6) ρ <u>is a limiting spectral function of</u> A (see 15. and 16.!).

<u>Then there exists a sequence</u> $\lambda_0, \lambda_1, \ldots$ <u>depending on</u> ρ <u>with the following properties</u>:

I. $\lambda_0, \lambda_1, \ldots$ <u>are distinct real</u>, $|\lambda_0| \leq |\lambda_1| \leq \ldots$, $\lim_{k \to +\infty} |\lambda_k| = +\infty$,

ρ <u>is constant on each open interval between two neighboring</u> $\lambda_0, \lambda_1, \ldots$,

ρ <u>is discontinuous at</u> $\lambda_0, \lambda_1, \ldots$.

II. y_{λ_k} <u>is real on</u> $[0, +\infty)$, $0 < \int_0^{+\infty} |y_{\lambda_k}(t)|^2 \, dt < +\infty$ <u>for all</u> $k = 0, 1, \ldots$.

III. $y_{\lambda_0}, y_{\lambda_1}, \ldots$ <u>is an orthogonal system on</u> $(0, +\infty)$ <u>with respect to the weight function</u> $w(t) = 1$ <u>on</u> $(0, +\infty)$.

IV. $y_{\lambda_0}, y_{\lambda_1}, \ldots$ is maximal (see 1.25!).

<u>Proof</u> Follows from Coddington and Levinson (4), p. 242.-244.

§ 42. The integration of the expansion formula in the limit point case at infinity

1. Theorem. Suppose:

1) $\alpha \in [0,\pi)$.

2) q is continuous real function on $[0,+\infty)$.

3) $Ay = -y'' + qy$ for all functions y with a continuous second derivative on $0,+\infty)$.

4) A is of the limit point type at infinity (see 41.5!).

5) For each $\lambda \in K$, y_λ is the solution of $Ay = \lambda y$ such that $y_\lambda(0) = \cos\alpha$, $y'_\lambda(0) = \sin\alpha$. (By 41.1, such a solution exists and is uniquely determined.)

6) ρ is the (unique) limiting spectral function of A (see 41.9, 41.10!).

7) $f \in L^2(0,+\infty)$.

Then the following holds:

I. There exists a function g such that

$$(1) \qquad \int_0^{+\infty} |f(t)|^2\, dt = \int_{-\infty}^{+\infty} |g(\lambda)|^2\, d\rho(\lambda),$$

$$(2) \qquad \lim_{\substack{A \to -\infty \\ B \to +\infty}} \int_0^{+\infty} \left| f(t) - \int_A^B g(\lambda)\, y_\lambda(t)\, d\rho(\lambda) \right|^2 dt = 0.$$

$$\text{II.} \qquad \int_{x_0}^{x} f(t)dt = \int_{\to -\infty}^{\to +\infty} g(\lambda) \left[\int_{x_0}^{x} y_\lambda(t)\, dt \right] d\rho(\lambda)$$

<u>for all</u> $x_0, x \in [0,+\infty)$.

III. <u>For any fixed</u> $X \in (0,+\infty)$ <u>the improper Lebesgue-Stieltjes integral on the right-hand side of</u> II. <u>converges uniformly for all</u> $x_0, x \in [0,X]$.

<u>Proof</u>. I. Follows from I. and III. in 41.11.

II. It follows from 7) by the Hölder inequality that

$$(3) \qquad f \in L(0,x) \qquad \text{for all } x \in [0,+\infty).$$

By (2), there exist $A_0 \in (-\infty,0)$, $B_0 \in (0,+\infty)$ independent of t such that $f(t) - \int_A^B g(\lambda)\, y_\lambda(t)\, d\rho(\lambda) \in L^2(0,+\infty) \overset{\text{Hölder}}{\subset} L(0,x)$ for all $x \in [0,+\infty)$, $A \in (-\infty,A_0)$, $B \in (B_0,+\infty)$. Hence, by (1),

$$(4) \qquad \begin{cases} f(t) - \int_A^B g(\lambda)\, y_\lambda(t)\, d\rho(\lambda) \in L(0,x) \quad \text{for all} \\ \qquad x \in [0,+\infty),\ A \in (-\infty,A_0),\ B \in (B_0,+\infty). \end{cases}$$

Consequently, by the Hölder inequality again,

$$\left|\int_0^x f(t)dt - \int_0^x \left[\int_A^B g(\lambda)y_\lambda(t)\, d\rho(\lambda)\right] dt\right| \leq \int_0^x \left|f(t) - \int_A^B g(\lambda)y_\lambda(t)\, d\rho(\lambda)\right| 1.dt$$

$$\overset{\text{Hölder}}{\leq} \left[\int_0^x \left|f(t) - \int_A^B g(\lambda)y_\lambda(t)\, d\rho(\lambda)\right|^2 dt\right]^{\frac{1}{2}} \left[\int_0^x dt\right]^{\frac{1}{2}} \leq$$

(5)

$$\leq \left[\int_0^{+\infty} \left|f(t) - \int_A^B g(\lambda)\, y_\lambda(t)\, d\rho(\lambda)\right|^2 dt\right]^{\frac{1}{2}} \sqrt{x}$$

for all $x \in [0,+\infty)$, $A \in (-\infty, A_0)$, $B \in (B_0 + \infty)$.

By II. in 41.1, there exists $M_{x,A,B} \in (0,+\infty)$ such that

(6) $\quad |y_\lambda(t)| \leq M_{x,A,B}$ for all $t \in [0,x]$, $\lambda \in [A,B]$.

By (6), the Hölder inequality

$$\int_0^x \left[\int_A^B |g(\lambda)|\,|y_\lambda(t)|\, d\rho(\lambda)\right] dt \overset{(6)}{\leq} M_{x,A,B} \times \int_A^B |g(\lambda)|\, .1.\, d\rho(\lambda) \overset{\text{Hölder}}{\leq}$$

(7)

$$\overset{\text{Hölder}}{\leq} M_{x,A,B} \times \left[\int_A^B |g(\lambda)|^2\, d\rho(\lambda)\right]^{\frac{1}{2}} \left[\int_A^B d\rho(\lambda)\right]^{\frac{1}{2}} < +\infty$$

for all $x \in [0,+\infty)$, $-\infty < A < B < +\infty$.

By (7) and the Fubini theorem,

$$(8)\quad \begin{cases} \displaystyle\int_0^x \Big[\int_A^B g(\lambda)\, y_\lambda(t)\, d\rho(\lambda)\Big] dt = \int_A^B g(\lambda) \Big[\int_0^x y_\lambda(t)\, dt\Big] d\rho(\lambda) \\ \qquad \text{for all} \quad x \in [0,+\infty),\ -\infty < A < B < +\infty. \end{cases}$$

Setting (8) into (5) we obtain

$$(9)\quad \begin{cases} \displaystyle\Big| \int_0^x f(t)\, dt - \int_A^B g(\lambda) \Big[\int_0^x y_\lambda(t) dt\Big] d\rho(\lambda) \Big| \leq \\ \displaystyle \leq \Big[\int_0^{+\infty} \Big| f(t) - \int_A^B g(\lambda)\, y_\lambda(t)\, d\rho(\lambda)\Big|^2 dt\Big]^{\frac{1}{2}} \sqrt{x} \\ \text{for all} \quad x \in [0,+\infty),\quad A \in (-\infty, A_0),\quad B \in (B_0, +\infty). \end{cases}$$

By (2), the right-hand side of (9) tends to zero as $A \to -\infty$, $B \to +\infty$. Hence

$$(10)\quad \begin{cases} \displaystyle\int_0^x f(t) dt = \int_{\to -\infty}^{\to +\infty} g(\lambda) \Big[\int_0^x y_\lambda(t)\, dt\Big] d\rho(\lambda) \\ \qquad \text{for all} \quad x \in [0,+\infty). \end{cases}$$

Writing (10) for x_0 instead of x, and subtracting the two equations, we obtain II.

III. Fix any $X \in (0,+\infty)$. Then, by (9),

$$(11)\quad \begin{cases} \left| \int_0^x f(t)dt - \int_A^B g(\lambda) \left[\int_0^x y_\lambda(t)dt \right] d\rho(\lambda) \right| \leq \\ \leq \left[\int_0^{+\infty} \left| f(t) - \int_A^B g(\lambda)\, y_\lambda(t)\, d\rho(\lambda) \right|^2 dt \right]^{\frac{1}{2}} \sqrt{X} \\ \text{for all } x \in [0,X],\ A \in (-\infty, A_0),\ B \in (B_0, +\infty). \end{cases}$$

The right-hand side of (11) does not depend on x and, by (2), tends to zero as $A \to -\infty$, $B \to +\infty$. Hence

$$(12)\quad \begin{cases} \int_0^x f(t)dt = \int_{\to -\infty}^{\to +\infty} g(\lambda) \left[\int_0^x y_\lambda(t)dt \right] d\rho(\lambda) \\ \text{uniformly for all } x \in [0,X]. \end{cases}$$

Writing (12) for x_0 instead of x, and subtracting the two equations, we obtain III.

<u>2. Theorem</u>. <u>Suppose</u>:

1) $\alpha \in [0,\pi)$.

2) q <u>is a real continuous function on</u> $[0,+\infty)$.

3) $\lim_{t \to +\infty} q(t) = +\infty$.

4) $Ay = -y'' + qy$ <u>for all functions with a continuous second derivative on</u> $[0,+\infty)$.

(By 2), 3), 4) and 41.7, A <u>is of the limit point type at infinity</u>).

5) <u>For every complex</u> λ, y_λ <u>is the solution of</u> $Ay = \lambda y$ <u>such that</u> $y_\lambda(0) = \cos\alpha$, $y'_\lambda(0) = \sin\alpha$.

(By 41.1, such a solution exists and is uniquely determined.)

6) ρ <u>is a limiting spectral function of</u> A (see 41.9!).

7) $-\infty < \lambda_0 < \lambda_1 < \ldots < +\infty$ <u>with</u> $\lim_{k\to+\infty} \lambda_k = +\infty$ <u>is the sequence in</u> 41.13 <u>so that by</u> 41.13 y_{λ_k} <u>is real, measurable on</u> $[0,+\infty)$, $0 < \| y_{\lambda_k} \|_{L^2(0,+\infty)} < +\infty$ <u>for</u> $k = 0,1,\ldots,$ <u>and</u> $y_{\lambda_0}, y_{\lambda_1},\ldots$ <u>is a maximal orthogonal system on</u> $(0,+\infty)$ <u>with respect to the weight function</u> $w(t) = 1$ <u>on</u> $(0,+\infty)$, i.e. (by 2.4) <u>a closed orthogonal system in</u> $L^2(0,+\infty)$.

8) $f \in L^2(0,+\infty)$.

9) $c_k(f)$ <u>is the Fourier coefficient of</u> f <u>with respect to</u> y_{λ_k} (see 1.16 and 3.9!) <u>so that</u> $f \sim \sum_{k=0}^{+\infty} c_k(f)\, y_{\lambda_k}$.

<u>Then the following holds</u>:

I. $$\int_{x_0}^{x} f(t)\,dt = \sum_{k=0}^{+\infty} c_k(f) \int_{x_0}^{x} y_{\lambda_k}(t)\,dt$$ <u>for all</u> $x_0, x \in [0,+\infty)$.

II. <u>For any fixed</u> $X \in [0,+\infty$ <u>the series on the right-hand of</u> I. <u>converges absolutely and uniformly for all</u> $x_0, x \in [0,X]$.

<u>Proof</u>. Since the orthogonal system $y_{\lambda_0}, y_{\lambda_1},\ldots$ is closed in the $L^2(0,+\infty)$-norm, everything follows from 15.3.

<u>3. Remark</u>. All the results in this section are new.

§ 43. The stability theorems

1. The basic lemma (Gronwall lemma). Suppose:

1) $c \in [0,+\infty)$, $x_0 \in (-\infty,+\infty)$.

2) y, z are non-negative, continuous functions on $[x_0,+\infty)$.

3) $y(x) \leq c + \int_{x_0}^{x} y(t)\, z(t)dt$ for all $x \in [x_0,+\infty)$.

Then

$$y(x) \leq c\, e^{\int_{x_0}^{x} z(t)dt} \quad \text{for all } x \in [x_0,+\infty).$$

Proof. First let $c \in (0,+\infty)$. Then, by 2),

$$c + \int_{x_0}^{x} y(t)\, z(t)dt \in (0,+\infty) \quad \text{for all } x \in [x_0,+\infty). \tag{1}$$

By (1) and 2), the inequality in 3) is preserved when dividing by its right-hnad side and multiplying by $z(x)$. Hence

$$\frac{y(x)\, z(x)}{c + \int_{x_0}^{x} y(t)\, z(t)dt} \leq z(x) \quad \text{for all } x \in [x_0,+\infty). \tag{2}$$

By 2), both sides of (2) are continuous functions of x in $[x_0,+\infty)$. Consequently writing x_1 instead of x and integrating over $[x_0,x]$ we obtain

$$(3) \qquad \int_{x_0}^{x} \frac{y(x_1)\, z(x_1)}{c + \int_{x_0}^{x_1} y(t)\, z(t)dt}\, dx_1 \leq \int_{x_0}^{x} z(x_1)dx_1 \qquad \text{for all } x \in [x_0, +\infty).$$

By the substitution $c + \int_{x_0}^{x_1} y(t)\, z(t)dt = u$, $y(x_1)\, z(x_1)dx_1 = du$ and 3) we next obtain

$$(4) \quad \begin{cases} \displaystyle\int_{x_0}^{x} \frac{y(x_1)\, z(x_1)}{c + \int_{x_0}^{x_1} y(t)\, z(t)dt}\, dx_1 = \int_{c}^{c + \int_{x_0}^{x} y(t)\, z(t)dt} \frac{du}{u} = \\[2ex] \displaystyle = \log \underbrace{\left| c + \int_{x_0}^{x} y(t)\, z(t)dt \right|}_{>0 \text{ by } (1)} - \log \underbrace{|c|}_{>0 \text{ by ass.}} = \log \left[c + \int_{x_0}^{x} y(t)\, z(t)dt \right] - \log c \\[2ex] \displaystyle = \log \frac{c + \int_{x_0}^{x} y(t)\, z(t)dt}{c} \overset{3)}{\geq} \log \underbrace{\frac{y(x)}{c}}_{>0 \text{ by 2) and ass.}} \qquad \text{for all } x \in [x_0, +\infty). \end{cases}$$

By (3) and (4), $\log \frac{y(x)}{c} \leq \int_{x_0}^{x} z(t)dt$ for all $x \in [x_0, +\infty)$, whence the above inequality for $c \in (0, +\infty)$ easily follows. The case $c = 0$ may be obtained from the preceeding by considering $c \to 0+$.

2. The stability theorem. Suppose:

1) $x_0 \in (-\infty, +\infty)$.

2) $Q(x) > 0$ for all $x \in [x_0, +\infty)$.

3) Q' is non-negative, continuous on $[x_0, +\infty)$.

4) $y''(x) + Q(x)\, y(x) = 0$ for all $x \in [x_0, +\infty)$.

Then

$$|y(x)| \leq \sqrt{\frac{y'^2(x_0) + Q(x_0)\, y^2(x_0)}{Q(x_0)}} \qquad \text{for all } x \in [x_0, +\infty).$$

Proof. Since, by 4), y'' exists on $[x_0, +\infty)$, y is continuous on $[x_0, +\infty)$ so that, by 4) and 3), y'' is continuous on $[0, +\infty)$. Consequently writing t instead of x in 4), multiplying both sides by $y'(t)$ and integrating over $[x_0, x]$ we obtain

$$(1) \qquad \int_{x_0}^{x} y'(t)\, y''(t)dt + \int_{x_0}^{x} Q(t)\, y(t)\, y'(t)dt = 0 \qquad \text{for all } x \in [x_0, +\infty).$$

By the substitution $y'(t) = u$, $y''(t)dt = du$ in the first integral we obtain

$$(2) \quad \begin{cases} \displaystyle\int_{x_0}^{x} y'(t)\, y''(t)dt = \int_{y'(x_0)}^{y'(x)} u\, du = \left[\frac{1}{2} u^2\right]_{y'(x_0)}^{y'(x)} = \frac{1}{2}\left[y'^2(t)\right]_{x_0}^{x} \\ \text{for all } x \in [x_0, +\infty). \end{cases}$$

Setting $U(t) = Q(t)\ y(t)$, $v(t) = y(t)$ and integrating by parts in the second integral we have

$$\int_{x_0}^{x} Q(t)\ y(t)\ y'(t)dt = \left[Q(t)\ y^2(t)\right]_{x_0}^{x} - \int_{x_0}^{x} Q'(t)\ y^2(t)dt - \int_{x_0}^{x} Q(t)\ y(t)\ y'(t)$$

$$\text{for all } x \in [x_0, +\infty).$$

Calculating $\int_{x_0}^{x} Q(t)\ y(t)\ y'(t)dt$ as an unknown we obtain from the prece ding equation

$$(3)\quad \begin{cases} \displaystyle\int_{x_0}^{x} Q(t)\ y(t)\ y'(t)dt = \frac{1}{2}\left[Q(t)\ y^2(t)\right]_{x_0}^{x} - \frac{1}{2}\int_{x_0}^{x} Q'(t)\ y^2(t)dt \\ \text{for all } x \in [x_0, +\infty). \end{cases}$$

Setting (2) and (3) in (1) and multiplying by 2 we next obtain

$$(4)\qquad y'^2(x) + Q(x)\ y^2(x) - \int_{x_0}^{x} Q'(t)\ y^2(t)dt = c(x_0) \quad \text{for all } x \in [x_0, +\infty),$$

where, by 2),

$$(5)\qquad c(x_0) = y'^2(x_0) + Q(x_0)\ y^2(x_0) \overset{2)}{\geq} 0.$$

By (4),

$$Q(x)\, y^2(x) = c(x_0) + \int_{x_0}^{x} Q'(t)\, y^2(t)dt - y'^2(x) \leq c(x_0) + \int_{x_0}^{x} Q'(t)\, y^2(t)\, dt =$$

(6)

$$= c(x_0) + \int_{x_0}^{x} Q(t)\, y^2(t)\, \frac{Q'(t)}{Q(t)}\, dt \qquad \text{for all } x \in [x_0, +\infty).$$

Since, by (5), $c(x_0) \geq 0$ and, by 2) and 3), $Q(t)\, y^2(t)$ and $\frac{Q'(t)}{Q(t)}$ are non-negative continuous function on $[x_0, +\infty)$ satisfying (6), it follows from the basic lemma 1. that

(7) $$Q(x)\, y^2(x) \leq c_0(x)\, e^{\int_{x_0}^{x} \frac{Q'(t)}{Q(t)}\, dt} \qquad \text{for all } x \in [x_0, +\infty).$$

Since, by 2) and 3), $Q(t) > 0$ and Q' is continuous for all $t \in [x_0, +\infty)$ we have

(8) $$\int_{x_0}^{x} \frac{Q'(t)}{Q(t)}\, dt = \Big[\log Q(t)\Big]_{x_0}^{x} = \log \frac{Q(x)}{Q(x_0)} \qquad \text{for all } x \in [x_0, +\infty).$$

Setting (8) into (7) we obtain

$$Q(x)\, y^2(x) \leq c(x_0)\, \frac{Q(x)}{Q(x_0)} \qquad \text{for all } x \in [x_0, +\infty).$$

In view of 2) we may divide both sides by $Q(x)$. Then, by (5),

$$y^2(x) \leq \frac{c(x_0)}{Q(x_0)} \overset{(5)}{=} \frac{y'^2(x_0) + Q(x_0)\, y^2(x_0)}{Q(x_0)} \qquad \text{for all } x \in [x_0, +\infty),$$

whence our inequality follows.

3. Theorem. Suppose:

1) $x_0 \in [0, +\infty)$; $a, b \in (-\infty, +\infty)$.

2) q is a real, continuous function on $[0, +\infty)$.

3) $m(x) = \max\limits_{0 \leq t \leq x} |q(t)|$ for all $x \in [0, +\infty)$.

4) $\lim\limits_{x \to +\infty} q(x) = -\infty$.

5) q' is non-positive, continuous on $[x_0, +\infty)$.

Then the following holds:

I. For every complex λ, there exists a unique function y_λ satisfying the conditions

(i) $-y''_\lambda(x) + q(x)\, y_\lambda(x) = \lambda\, y_\lambda(x)$ for all $x \in [0, +\infty)$.

(ii) $y_\lambda(0) = a$, $y'_\lambda(0) = b$.

II. $|y_\lambda(x)| \leq (|a| + |b|\, x)\, e^{\sqrt{m(x) + |\lambda|}\, x}$ for all $x \in [0, +\infty)$, and all complex λ.

III. For any fixed $A \in (-\infty, 0)$ there exists $x_1 \in [x_0, +\infty)$ depending on q, A only such that

$$\left.\begin{array}{l} \lambda - q(x) \geq 1 \\ |y_\lambda(x)| \leq \sqrt{y'^2(x_1) + [\lambda - q(x_1)]\, y_\lambda^2(x_1)} \end{array}\right\} \text{for all } x \in [x_1, +\infty), \quad A, +\infty).$$

IV. <u>For any fixed</u> $x \in [0, +\infty)$, $y_\lambda(x)$, $y'_\lambda(x)$ <u>and</u> $y''_\lambda(x)$ <u>are entire functions of</u> λ.

<u>Proof</u>. I., II. and IV. follow from the existence theorem 41.1. It remains to prove that y_λ also satisfies III.

Fix any $A \in (-\infty, 0)$. By 4), there exists x_1 depending on q, A only such that

(1) $$0 \overset{1)}{\leq} x_0 \leq x_1 < +\infty,$$

(2) $$q(x) \leq A-1 \qquad \text{for all} \quad x \in [x_1, +\infty).$$

Then

(3) $$\lambda - q(x) \geq A - q(x) \overset{(2)}{\geq} 1 \quad \text{for all } x \in [x_1, +\infty), \quad \lambda \in [A, +\infty),$$

(4) $$\left\{ \begin{array}{l} [\lambda - q(x)]' \overset{(1),5)}{=} -q'(x) \overset{5)}{=} \text{non-negative, continuous on} \\ [x_1, +\infty) \text{ for all complex } \lambda . \end{array} \right.$$

By (3), (4) and (i), the assumptions of the stability theorem 2. are satisfied when taking $\lambda - q(x)$, $y_\lambda(x)$ for $\lambda \in [A, +\infty)$ and x_1 instead of $Q(x)$, $y(x)$ and x_0 respectively. Consequently, by 2.,

$$|y_\lambda(x)| \overset{2.}{\leq} \sqrt{\frac{y_\lambda'^2(x_1) + [\lambda - q(x_1)]\ y_\lambda^2(x_1)}{\lambda - q(x_1)}} \overset{(3)}{\leq}$$

(5)

$$\overset{(3)}{\leq} \sqrt{y'^2(x_1) + [\lambda - q(x_1)]\ y^2(x_1)} \quad \text{for all } x \in [x_1, +\infty),\ \lambda \in [A, +\infty).$$

But (3) and (5) imply IV.

4. Remarks. The theorems in 1. and 2. are well-known and may be found in many books, e.g. Bellman (3) p. The result in 3. is an easy consequence of these.

§ 44. The Laplace transformation of the expansion formula in the limit point case at infinity

1. Theorem. Suppose:

1) $\alpha \in [0,\pi)$.

2) q is a real continuous function on $[0,+\infty)$.

3) $|q(t)| \leq M < +\infty$ for all $t \in [0,+\infty)$.

4) $Ay = -y'' + qy$ for all functions y with a continuous second derivative on $[0,+\infty)$.

(By 2), 3), 4) and 41.7, A is of the limit point type at infinity.)

5) For every complex λ, y_λ is the solution of $Ay = \lambda y$ such that $y_\lambda(0) = \cos\alpha$, $y'_\lambda(0) = \sin\alpha$.

(By 41.1, such a solution exists and is uniquely determined.)

6) ρ is the (unique) limiting spectral function of A (see 41.9, 41.10!).

7) $f \in L^2(0,+\infty)$.

Then the following holds:

I. There exists a function g such that

$$(1) \qquad \int_0^{+\infty} |f(t)|^2\,dt = \int_{-\infty}^{+\infty} |g(\lambda)|^2\,d\rho(\lambda),$$

$$(2) \qquad \lim_{\substack{A \to -\infty \\ B \to +\infty}} \int_0^{+\infty} \left| f(t) - \int_A^B g(\lambda)\, y_\lambda(t)\, d\rho(\lambda) \right|^2 dt = 0.$$

II. <u>Given any</u> $\varepsilon \in (0,+\infty)$ <u>there exist</u> $A_0 \in (-\infty,0)$, $B_0 \in (0,+\infty)$ <u>such that</u>

$$\left| \int_0^{+\infty} f(t)\, e^{-zt}\, dt - \int_A^B g(\lambda) \left[\int_0^{+\infty} y_\lambda(t)\, e^{-zt}\, dt \right] d\rho(\lambda) \right| < \varepsilon$$

<u>for all</u> $A \in (-\infty,A_0)$, $B \in (B_0,+\infty)$, <u>and uniformly for all</u> $\operatorname{Re} z > \sqrt{\max(|A|,|B|) + M}$.

<u>Proof</u>. I. Follows from 41.11.

II. Let $\operatorname{Re} z = x$ for all complex z. By the Hölder inequality and 7),

$$(3) \qquad \left| \int_0^{+\infty} f(t) e^{-zt} dt \right| \leq \int_0^{+\infty} |f(t)| e^{-xt} dt \overset{\text{Hölder}}{\leq} \left[\int_0^{+\infty} |f(t)|^2 dt \right]^{\frac{1}{2}} \left[\int_0^{+\infty} e^{-2xt} dt \right]^{\frac{1}{2}} < \overset{7)}{<} +\infty \quad \text{for all } x = \operatorname{Re} z \in (0,+\infty).$$

By (2) and 7), there exist $A_1 \in (-\infty,0)$, $B_1 \in (0,+\infty)$ independent on t such that

$$(4) \qquad \int_A^B g(\lambda)\, y_\lambda(t)\, d\rho(\lambda) \in L^2(0,+\infty) \quad \text{for all}$$

$$A \in (-\infty,A_1),\ B \in (B_1,+\infty),\ t \in [0,+\infty).$$

By the Hölder inequality and (4),

$$(5)\quad \begin{cases} \left| \int_0^{+\infty} \left[\int_A^B g(\lambda)\, y_\lambda(t)\, d\rho(\lambda) \right] e^{-zt} dt \right| \leq \int_0^{+\infty} \left| \int_A^B g(\lambda)\, y_\lambda(t)\, d\rho(\lambda) \right| e^{-xt} dt \\ \overset{\text{Hölder}}{\leq} \left[\int_0^{+\infty} \left| \int_A^B g(\lambda)\, y_\lambda(t)\, d\rho(\lambda) \right|^2 dt \right]^{\frac{1}{2}} \left[\int_0^{+\infty} e^{-2xt} dt \right]^{\frac{1}{2}} \overset{(4)}{<} +\infty \\ \text{for all } A \in (-\infty, A_1),\ B \in (B_1, +\infty),\ x = \operatorname{Re} z \in (0, +\infty). \end{cases}$$

By (3), (5) and the Hölder inequality,

$$(6)\quad \begin{cases} \left| \underbrace{\int_0^{+\infty} f(t)\, e^{-zt} dt}_{\text{ex. by (3)}} - \underbrace{\int_0^{+\infty} \left[\int_A^B g(\lambda)\, y_\lambda(t)\, d\rho(\lambda) \right] e^{-zt} dt}_{\text{ex. by (5)}} \right| \leq \\ \leq \int_0^{+\infty} \left| f(t) - \int_A^B g(\lambda)\, y_\lambda(t)\, d\rho(\lambda) \right| e^{-xt}\, dt \overset{\text{Hölder}}{\leq} \\ \overset{\text{Hölder}}{\leq} \left[\int_0^{+\infty} \left| f(t) - \int_A^B g(\lambda)\, y_\lambda(t)\, d\rho(\lambda) \right|^2 dt \right]^{\frac{1}{2}} \left[\int_0^{+\infty} e^{-2xt} dt \right]^{\frac{1}{2}} = \\ = \left[\int_0^{+\infty} \left| f(t) - \int_A^B g(\lambda)\, y_\lambda(t)\, d\rho(\lambda) \right|^2 dt \right]^{\frac{1}{2}} \frac{1}{\sqrt{2x}} \\ \text{for all } A \in (-\infty, A_1),\ B \in (B_1, +\infty),\ x = \operatorname{Re} z \in (0, +\infty). \end{cases}$$

By (2), the integral on the right-hand side of (6) tends to zero as $A \to -\infty$, $B \to +\infty$. Next, fixing any $x_0 \in (0, +\infty)$, the factor $\frac{1}{\sqrt{2x}}$ may be majorized by $\frac{1}{\sqrt{2x_0}}$ for all $x = \operatorname{Re} z \in [x_0, +\infty)$. Consequently given any $\varepsilon \in (0, +\infty)$ there exist $A_0 \in (-\infty, A_1]$, $B_0 \in [B_1, +\infty)$ such that

$$(7)\quad \begin{cases} \left| \int_0^{+\infty} f(t)\, e^{-zt}\, dt - \int_0^{+\infty} \left[\int_A^B g(\lambda)\, y_\lambda(t)\, d\rho(\lambda) \right] e^{-zt}\, dt \right| < \varepsilon \\ \qquad \text{for all } A \in (-\infty, A_0),\ B \in (B_0, +\infty),\ \operatorname{Re} z \in (0, +\infty), \\ \text{and uniformly for all } \operatorname{Re} z \in [x_0, +\infty) \quad (x_0 \in (0, +\infty) \text{ arbitrary}). \end{cases}$$

Now let $\lambda \in [A,B]$. Set $\max(|A|,|B|) = L$ so that $|\lambda| \leq L$. By 3), 5) and 41.1,

$$(8)\qquad |y_\lambda(t)| \leq (1+t)e^{\sqrt{L+M}\, t} \quad \text{for all} \quad t \in [0, +\infty),\ \lambda \in [A,B].$$

Using (8) and integrating by parts

$$(9)\quad \begin{cases} \int_0^{+\infty} |y_\lambda(t)|\,|e^{-zt}|\,dt \overset{(8)}{\leq} \int_0^{+\infty} (1+t)e^{-(x-\sqrt{L+M})t}\, dt \overset{\text{by parts}}{=} \\ \overset{\text{by parts}}{=} \dfrac{1}{x-\sqrt{L+M}} + \dfrac{1}{(x-\sqrt{L+M})^2} \\ \qquad \text{for all } \lambda \in [A,B],\ \operatorname{Re} z = x \in (\sqrt{L+M}, +\infty). \end{cases}$$

By (9), the Hölder inequality, (1) and 7),

$$
(10)\quad \begin{cases}
\displaystyle\int_A^B \left[\int_0^{+\infty} |g(\lambda)||y_\lambda(t)||e^{-zt}|dt \right] d\rho(\lambda) \overset{(9)}{\leq} \\[2ex]
\displaystyle\overset{(9)}{\leq} \left[\frac{1}{x-\sqrt{L+M}} + \frac{1}{(x-\sqrt{L+M})^2} \right] \int_A^B |g(\lambda)|\, d\rho(\lambda) \overset{\text{Hölder}}{\leq} \\[2ex]
\displaystyle\overset{\text{Hölder}}{\leq} \left[\frac{1}{x-\sqrt{L+M}} + \frac{1}{(x-\sqrt{L+M})^2} \right] \left[\int_A^B |g(\lambda)|^2\, d\rho(\lambda) \right]^{\frac{1}{2}} \left[\int_A^B d\rho(\lambda) \right]^{\frac{1}{2}} \leq \\[2ex]
\displaystyle\leq \left[\frac{1}{x-\sqrt{L+M}} + \frac{1}{(x-\sqrt{L+M})^2} \right] \left[\int_{-\infty}^{+\infty} |g(\lambda)|^2\, d\rho(\lambda) \right]^{\frac{1}{2}} \left[\int_A^B d\rho(\lambda) \right]^{\frac{1}{2}} \leq \\[2ex]
\displaystyle\overset{(1),7)}{<} +\infty \qquad \text{for all } \operatorname{Re} z = x \in (\sqrt{L+M}, +\infty).
\end{cases}
$$

By (10) and the Fubini theorem,

$$
(11)\quad \begin{cases}
\displaystyle\int_0^{+\infty} \left[\int_A^B g(\lambda)\, y_\lambda(t)\, d\rho(\lambda) \right] e^{-zt} dt = \int_A^B g(\lambda) \left[\int_0^{+\infty} y_\lambda(t) e^{-zt} dt \right] d\rho(\lambda) \\[2ex]
\qquad \text{for all } \operatorname{Re} z = x \in (\sqrt{L+M}, +\infty).
\end{cases}
$$

Setting (11) into (7) and observing that $L+M = \max(|A|,|B|)+M$ $\max(|A_0|,|B_0|)+M > 0$ for all A,B such that $-\infty < A < A_0 < 0 < B_0 < B < +\infty$ we obtain III.

<u>2. Remark</u>. Observe that, in general, III. in 1. does not imply the formula

$$\int_0^{+\infty} f(z)e^{-zt}dt = \int_{\to -\infty}^{\to +\infty} g(\lambda) \left[\int_0^{+\infty} y_\lambda(t)e^{-zt}dt \right] d\rho(\lambda)$$

since the halfplane $\sqrt{\max(|A|,|B|) + M} < \operatorname{Re} z < +\infty$ tends to the empty set as $A \to -\infty$, $B \to +\infty$. On the other hand, the fact that the formula in III. holds uniformly in an <u>open</u> halfplane suggests the possibility of strengthening the preceeding result. This would, however, require a deeper investigation of limiting spectral functions and differential operators, than envisaged here. We therefore restrict ourselves to the following results only.

<u>3. Theorem</u>. <u>Suppose</u>:

1) $\alpha \in [0,\pi)$; $x_0 \in [0,+\infty)$.

2) q <u>is a real, continuous function on</u> $[0,+\infty)$.

3) $\lim_{t \to +\infty} q(t) = -\infty$.

4) q' <u>is non-positive, continuous on</u> $[x_0,+\infty)$.

5) $Ay = -y'' + qy$ <u>for all functions</u> y <u>with a continuous second derivative on</u> $[0,+\infty)$.

6) A <u>is in the limit point case at infinity</u> (By 41.7, this condition is satisfied if $q(t) \geq -kt^2$ for all large t and some $k \in (0,+\infty)$.).

7) <u>For each complex</u> λ, y_λ <u>is the solution of</u> $Ay = \lambda y$ <u>satisfying the initial conditions</u> $y_\lambda(0) = \cos\alpha$, $y'_\lambda(0) = \sin\alpha$. (By 41.1, y_λ exists and is uniquely determined.)

8) ρ <u>is a limiting spectral function of</u> A (see 41.9!).

9) $f \in L^2(0,+\infty)$.

Then the following holds:

I. There exists a function g such that

$$(1) \qquad \int_0^{+\infty} |f(t)|^2\, dt = \int_{-\infty}^{+\infty} |g(\lambda)|^2\, d\rho(\lambda),$$

$$(2) \qquad \lim_{\substack{A \to -\infty \\ B \to +\infty}} \int_0^{+\infty} \left| f(t) - \int_A^B g(\lambda)\, y_\lambda(t)\, d\rho(\lambda) \right|^2 dt = 0.$$

II. $$\int_0^{+\infty} f(t)\, e^{-zt} dt = \int_{\to -\infty}^{\to +\infty} g(\lambda) \left[\int_0^{+\infty} y_\lambda(t)\, e^{-zt} dt \right] d\rho(\lambda)$$

for all z with $\operatorname{Re} z \in (0, +\infty)$.

III. For any fixed $\delta \in (0, +\infty)$ the improper Lebesgue-Stieltjes integral on the right-hand side of II. converges uniformly for all z with $\operatorname{Re} z \in [\delta, +\infty)$.

Proof. I. Follows from 41.11.

In the same manner as in the proof of 1. we can verify the existence of $A_1 \in (-\infty, 0)$, $B_1 \in (0, +\infty)$ such that

$$(3) \quad \left\{ \begin{aligned} & \left| \int_0^{+\infty} f(t) e^{-zt} dt - \int_0^{+\infty} \left[\int_A^B g(\lambda)\, y_\lambda(t)\, d\rho(\lambda) \right] e^{-zt}\, dt \right| \leq \\ & \leq \left[\int_0^{+\infty} \left| f(t) - \int_A^B g(\lambda)\, y_\lambda(t)\, d\rho(\lambda) \right|^2 dt \right]^{\frac{1}{2}} \frac{1}{\sqrt{2x}} \\ & \text{for all } A \in (-\infty, A_1),\ B \in (B_1, +\infty),\ x = \operatorname{Re} z \in (0, +\infty). \end{aligned} \right.$$

Fix any $A \in (-\infty, A_1)$, $B \in (B_1, +\infty)$. Then, by 7) and III. in 43.3, there exists $x_1 \in [x_0, +\infty)$ depending on q, A only such that

$$(4) \quad \left\{ \begin{array}{l} \lambda - q(t) \geq 1, \\ \\ |y_\lambda(t)| \leq \sqrt{y_\lambda'^2(x_1) + [\lambda - q(x_1)]\, y_\lambda^2(x_1)} \end{array} \right\} \text{ for all } t \in [x_1, +\infty),\ \lambda \in [A,B]$$

By 7) and II. in 43.3 with $a = \cos\alpha$, $b = \sin\alpha$, we next have

$$(5) \qquad |y_\lambda(t)| \leq (1+x_1)\, e^{\sqrt{m(x_1)+|\lambda|}\, x_1} \quad \text{for all } t \in [0, x_1],\ \lambda \in [A,B],$$

where $m(x_1) = \max\limits_{0 \leq t \leq x_1} |q(t)|$. Finally, by 7) and IV. in 43.3, $y_\lambda'(x_1)$ and $y_\lambda(x_1)$ are entire functions of λ so that

$$(6) \qquad y_\lambda'^2(x_1),\ y_\lambda^2(x_1) \text{ are bounded for all } \lambda \in [A,B].$$

By (4), (5) and (6), there exists $M_{A,B} \in [0, +\infty)$ such that

$$(7) \qquad |y_\lambda(t)| \leq M_{A,B} \quad \text{for all } t \in [0, +\infty),\ \lambda \in [A,B].$$

Consequently, by (7), the Hölder inequality and (1),

$$(8)\quad \begin{cases} \displaystyle\int_A^B \left[\int_0^{+\infty} |g(\lambda) y_\lambda(t) e^{-zt}| dt \right] d\rho(\lambda) \overset{(7)}{\leq} M_{A,B} \int_A^B |g(\lambda)| d\rho(\lambda) \int_0^{+\infty} e^{-xt} dt = \\ \displaystyle = \frac{M_{A,B}}{x} \int_A^B |g(\lambda)| d\rho(\lambda) \overset{\text{Hölder}}{\leq} \frac{M_{A,B}}{x} \left[\int_A^B |g(\lambda)|^2 d\rho(\lambda) \right]^{\frac{1}{2}} \left[\int_A^B d\rho(\lambda) \right]^{\frac{1}{2}} \leq \\ \displaystyle \leq \frac{M_{A,B}}{x} \left[\int_{-\infty}^{+\infty} |g(\lambda)|^2 d\rho(\lambda) \right]^{\frac{1}{2}} \left[\int_A^B d\rho(\lambda) \right]^{\frac{1}{2}} \overset{(1)}{<} +\infty \\ \text{for all } x = \operatorname{Re} z \in (0, +\infty). \end{cases}$$

By (6) and the Fubini theorem,

$$(9)\quad \begin{cases} \displaystyle\int_0^{+\infty} \left[\int_A^B g(\lambda)\, y_\lambda(t)\, d\rho(\lambda) \right] e^{-zt} dt = \int_A^B g(\lambda) \left[\int_0^{+\infty} y_\lambda(t) e^{-zt} dt \right] d\rho(\lambda) \\ \text{for all } A \in (-\infty, A_1),\ B \in (B_1, +\infty),\ \operatorname{Re} z \in (0, +\infty). \end{cases}$$

Setting (7) in (3) we obtain

$$(10)\quad \begin{cases} \displaystyle\left| \int_0^{+\infty} f(t) e^{-zt} dt - \int_A^B g(\lambda) \left[\int_0^{+\infty} y_\lambda(t)\, e^{-zt} dt \right] d\rho(\lambda) \right| \leq \\ \displaystyle \leq \left[\int_0^{+\infty} \left| f(t) - \int_A^B g(\lambda)\, y_\lambda(t)\, d\rho(\lambda) \right|^2 dt \right]^{\frac{1}{2}} \frac{1}{\sqrt{2x}} \\ \text{for all } A \in (-\infty, A_1),\ B \in (B_1, +\infty),\ x = \operatorname{Re} z \in (0, +\infty). \end{cases}$$

But (10) and (2) imply II.

Finally fix any δ $(0,+\infty)$. Then, by (10),

$$(11)\quad \begin{cases} \left| \int_0^{+\infty} f(t)e^{-zt}dt - \int_A^B g(\lambda) \left[\int_0^{+\infty} y_\lambda(t)e^{-zt}dt \right] d\rho(\lambda) \right| \leq \\ \leq \left[\int_0^{+\infty} \left| f(t) - \int_A^B g(\lambda)\, y_\lambda(t)\, d\rho(\lambda) \right|^2 dt \right]^{\frac{1}{2}} \frac{1}{\sqrt{2\delta}} \\ \qquad \text{for all } A \in (-\infty, A_1),\ B \in (B_1, +\infty),\ x = \operatorname{Re} z \in [\delta, +\infty). \end{cases}$$

But (11) and (2) imply III.

<u>4. Theorem</u>. <u>Suppose</u>:

1) $\alpha \in [0,\pi)$.

2) q <u>is a real continuous function on</u> $[0,+\infty)$.

3) $\lim_{t\to+\infty} q(t) = +\infty$.

4) $Ay = -y'' + qy$ <u>for all functions</u> y <u>with a continuous second derivative on</u> $[0,+\infty)$.

(By 2), 3), 4) and 41.7, A <u>is of the limit point type at infinity</u>.)

5) <u>For each complex</u> λ, y_λ <u>is the solution of</u> $Ay = \lambda y$ <u>such that</u> $y_\lambda(0) = \cos\alpha$, $y'_\lambda(0) = \sin\alpha$.

(By 41.1, such a solution exists and is uniquely determined.)

6) ρ <u>is a limiting spectral function of</u> A (see 41.9!).

7) $-\infty < \lambda_0 < \lambda_1 < \ldots < +\infty$ <u>with</u> $\lim_{k\to+\infty} \lambda_k = +\infty$ <u>is the sequence of</u> 41.13 <u>so that</u> y_k <u>is real, measurable on</u> $[0,+\infty)$, $0 < \| y_{\lambda_k} \|_{L^2(0,+\infty)} < +\infty$ <u>for</u> $k = 0,1,\ldots$, and $y_{\lambda_0}, y_{\lambda_1}, \ldots$ <u>is a maximal orthogonal system on</u> $(0,+\infty)$ <u>with respect to the weight function</u> $w(t) = 1$ <u>on</u> $(0,+\infty)$.

8) $f \in L^2(0,+\infty)$.

9) $c_k(f)$ <u>is the Fourier coefficient of</u> f <u>with respect to</u> y_{λ_k} (see 1.16 and 3.9!) <u>so that</u> $f \sim \sum_{k=0}^{+\infty} c_k(f)\, y_{\lambda_k}$.

<u>Then the following holds:</u>

I. $$\int_0^{+\infty} f(t)\, e^{-zt} dt = \sum_{k=0}^{+\infty} c_k(f) \int_0^{+\infty} y_{\lambda_k}(t)\, e^{-zt} dt$$

<u>for all</u> z <u>with</u> $\operatorname{Re} z \in (0,+\infty)$.

II. <u>For any fixed</u> $\delta \in (0,+\infty)$ <u>the series on the right-hand side of</u> I. <u>converges absolutely and uniformly for all</u> z <u>with</u> $\operatorname{Re} z \in [\delta,+\infty)$.

<u>Proof</u>. Since, by 7) and 2.4. the orthogonal system $y_{\lambda_0}, y_{\lambda_1}, \ldots$ is closed in the $L^2(0,+\infty)$-norm, everything follows from 18.5.

<u>5. Remark</u>. All the results in this section are new.

§ 45. The term-by-term integration and Laplace transformation of the expansion formula in the limit circle case at infinity

1. Theorem. Suppose:

1) $\alpha \in [0,\pi)$.

2) q is a real continuous function on $[0,+\infty)$.

3) $Ay = -y'' + qy$ for all functions y with a continuous second derivative on $[0,+\infty)$.

4) A is of the limit circle type at infinity (see 41.5!).

5) For each $\lambda \in K$, y_λ is the solution of $Ay = \lambda y$ such that $y_\lambda(0) = \cos\alpha$, $y'_\lambda(0) = \sin\alpha$.

(By 41.1, such a solution exists and is uniquely determined.)

6) ρ is a limiting spectral function of A (see 41.15 and 41.16!).

7) $\lambda_0, \lambda_1, \ldots$ is the real sequence depending on ρ of 41.17 so that y_{λ_k} is real, measurable on $[0,+\infty)$, $0 < \| y_{\lambda_k} \|_{L^2(0,+\infty)} < +\infty$ for $k = 0,1,\ldots,$ and $y_{\lambda_0}, y_{\lambda_1}, \ldots$ is a maximal orthogonal system on $(0,+\infty)$ with respect to the weight function $w(t) = 1$ on $(0,+\infty)$.

8) $f \in L^2(0,+\infty)$.

9) $c_k(f)$ is the Fourier coefficient of f with respect to y_{λ_k} (see 1.16 and 3.9!) so that $f \sim \sum_{k=0}^{+\infty} c_k(f)\, y_{\lambda_k}$.

Then the following holds:

I. $$\int_{x_0}^{x} f(t)dt = \sum_{k=1}^{+\infty} c_k(f) \int_{x_0}^{x} y_{\lambda_k}(t)dt \quad \text{for all} \quad x_0, x \in [0,+\infty).$$

II. For any fixed $X \in [0,+\infty)$ the series on the right-hand side of I. converges absolutely and uniformly for all $x_0, x \in [0,X]$.

III. $$\int_{0}^{+\infty} f(t)e^{-zt}dt = \sum_{k=0}^{+\infty} c_k(f) \int_{0}^{+\infty} y_{\lambda_k}(t)e^{-zt}dt \quad \text{for all}$$

z with $\operatorname{Re} z \in (0,+\infty)$.

IV. For any fixed $\delta \in (0,+\infty)$ the series on the right-hand side of III. converges absolutely and uniformly for all z with $\operatorname{Re} z \in [\delta,+\infty)$.

Proof. By 7) and 2.4, the orthogonal system $y_{\lambda_0}, y_{\lambda_1}, \ldots$ is closed in the $L^2(0,+\infty)$-norm. Everything then follows from 15.3 and 18.5.

2. Remark. The preceding result is new.

Bibliography

Books

(1) Alexits G.: Konvergenzprobleme der Orthogonalreihen, Akadémiai Kiadó, Budapest 1960.

(2) Bary N.K.: A treatise of trigonometric series, 2 volumes, McMillan, New York 1964.

(3) Bellman R.: Stability theory of differential equations, McGraw-Hill, New York, Toronto, London 1953.

(4) Coddington E., and Levinson N.: Theory of ordinary differential equations, McGraw-Hill, New York, Toronto, London 1955.

(5) Doetsch G.: Handbuch der Laplace Transformation, 2 volumes, Birkhäuser, Basel 1950.

(6) Geronimus J.L.: Polynomials orthogonal on a circumference or a segment, GIFML, Moscow 1950.

(7) Halmos P.: Measure theory, Van Nostrand, Princeton 1950.

(8) Hardy G.H., and Rogosinski W.W.: Fourier series, Cambridge University Press 1956.

(9) Hobson E.W.: The theory of spherical and ellipsoidal harmonics, Cambridge University Press 1931.

(10) Jackson D.: Fourier series and orthogonal polynomials, The Mathematical Association of America.

(11) Kaczmarz S., and Steinhaus H.: Theorie der Orthogonalreihen, Warsaw, Lwow 1935.

(12) Natanson I.P.: Constructive function theory, 3 volumes, Ungar, New York 1965.

(13) Saks S., and Zygmund A.: Analytic functions, Warsaw 1965.

(14) Szegö G.: Orthogonal polynomials, American Mathematical Society, New York 1939.

(15) Tricomi F.G.: Vorlesungen uber Orthogonalreihen, Springer, Berlin, Göttingen, Heidelberg 1955.

(16) Widder D.V.: The Laplace transform, Princeton University Press 1946.

(17) Zygmund A.: Trigonometric series, Cambridge University Press 1959.

Papers:

(18) Antosik P., and Mikusiński J.: On Hermite expansion, Bulletin de l'Académie Polonaise des Sciences, Série des Sciences Mathematiques, Astronomiques et Physiques, 16, 1968, pp. 787-791.

(18a) Billigheimer C.E.: Singular boundary problems for a five-term recurrence relation, American Journal of Mathematics, 91, 1968, pp. 1012-1048.

(19) Chatterjea S.K.: On the unified presentation of classical orthogonal polynomials, SIAM Review, 12, 1970, pp. 124-126.

(20) Cryer C.W.: Rodriquez formula and the classical orthogonal polynomials, Bolletino della Unione Mathematica Italiana, (4), 3, 1970, pp. 1-11.

(21) Dutta M., and Ganguly S.: On topology of spaces associated with Laplace transforms, Matematički Vesnik, Belgrade, 7 (22), 1970, pp. 3-6.

(22) Engelis G.: Two new expressions for classical orthogonal polynomials, Latvian Mathematical Yearbook, 5, pp. 195-199, Riga 1969.

(23) Fujiwara I.: Rodriguez formula and the classical orthogonal polynomials, Mathematica Japonicae, 11, 1966, pp. 133-148.

(24) Heinig H.P.: Representation theories for the Laplace transform, Canadian Mathematical Bulletin, 10, 1967, pp. 333-345.

(25) Konoplev V.P.: Characteristic properties of systems of orthogonal polynomials, Učennye Zapiski Saratovskogo Gosundarstvennogo Pedagogičeskogo Instituta, 46, 1968, pp. 18-26.

(26) Leviatan D.: On the representation of functions as Laplace integrals, The Journal of the London Mathematical Society, 44, 1969, pp. 88-92.

(27) Liverani F.: Le constanti di Haar per l'integrazione, Atti del Seminario Mathematico e Fisico dell' Università di Modena, 17, 1968, vol. 2, pp. 399-412.

(28) Mückenhaupt B.: Equiconvergence and a.e. convergence of Hermite and Laguerre series, SIAM Journal of Mathematical Analysis, 1, 1970, pp. 295-321.

(29) Novotný M.: Two theorems concerning the Laplace transformation of real periodic functions, Časopis pro pěstování matematiky, 93, 1968, pp. 284-298.

(30) Szegő G.: Beiträge Zur Theorie der Laguerrschen Polynome, Mathematische Zeitschrift, 25, 1926, pp. 87-115.

(31) Szegö G.: Asymptotische Entwicklungen der Jacobischen Polynome, Schriften der Königsberger Gelehrten Gesellschaft, naturwissenschaftliche Klasse, 10, 1933, pp. 35-112.

(32) Tricomi F.G.: Sulla teoria delli polinomi ortogonali, Atti della Accademia Nazionale dei Lincei, Rendiconti, Classe di Scienze Fiziche, Matematiche e Naturali, Sezione Ia, 8, 45, 1968, pp. 195-199.

(33) Uljanov P.L.: Certain properties of series in the Schauder system, Matematičeskie Zametki, 7, 1970, pp. 431-442.

(34) Verma A., and Prasad J.: Characterization of some orthogonal polynomials, Publications de l'Institute Mathematique, Belgrande, Nouvelle Serie, 9, 23, 1969, pp. 177-180.

(35) Widder D.V.: Necessary and sufficient conditions for the representation of a function as a Laplace integral, Transactions of the American Mathematical Society, 1931, vol. 33, pp. 851-892.

(36) Widder D.V.: Necessary and sufficient conditions for the representation of a function by a doubly infinite Laplace integral, Bulletin of the American Mathematical Society, 40, 1934, pp. 321-326.

(37) Young W.H.: On the connection between Legendre series and Fourier series, Proceedings of the London Mathematical Society, 2, vol. 18, 1919, pp. 141-162.