543

FIBRE OPTIC TELEPHONE - SYSTEM ANALYSIS

AN OPTICAL FIBRE TELEPHONE SYSTEM

(SYSTEM ANALYSIS)

by

ALGIS K. JURENAS, B.A.Sc.

PART B: McMASTER (OFF-CAMPUS) PROJECT*

A Project report submitted in partial fulfillment of

the requirements for the degree of

Master of Engineering

Department of Engineering Physics

McMaster University

Hamilton, Ontario, Canada

1980

*One of two project reports. The other one is designated PART A: ON-CAMPUS PROJECT

MASTER OF ENGINEERING (1981)
Department of Engineering Physics

McMASTER UNIVERSITY
HAMILTON, ONTARIO

TITLE: An Optical Fibre Telephone System Part B
(~~Analog Electronics~~) (system analysis)

AUTHOR: Algis K. Jurenas

SUPERVISOR: Dr. J.P. Marton

NO. OF PAGES: 71, viii

TABLE OF CONTENTS

ACKNOWLEDGEMENTS

The author would like to express his thanks to Dr. J.P. Marton for his supervision of this project. Special thanks are in order to my associates, Van Tzannidakis, John Goodwin, and Gary Duck.

LIST OF ILLUSTRATIONS

LIST OF TABLES

CHAPTER 1

INTRODUCTION

One of the main advantages of fibre optics is the large potential increase in information carrying capacity. Because of its higher frequency, light offers an increase of four orders of magnitude over microwave transmission. As well as this, fibre optics is advantageous for other reasons. These include crosstalk immunity, ground loop immunity, E.M.I. immunity, small size and weight, and longer repeater spacing due to the fibres low loss and wide bandwidth.

As an example of the state of the art of optical fibre communications, a system was installed in Chicago in 1977 over a ten kilometer length. It used injection lasers driven at a rate of 44.7 megabits per second. The fibre cable contained 24 fibres, each fibre having the capacity to carry 672 one way voice signals.

Many such systems have been recently built, and evaluation reports are just beginning to appear. Many areas and problems remain to be investigated. For instance, a recent article in the IEEE Journal of Cable Television points out the need for more research into optical splitters and taps. This need was one of the primary motivations for the present project.

For our M.Eng. on-compus project, my associates and I have chosen the design, assembly and preliminary evaluation of a telephone system designed for short or medium distance transmission over optical fibre.

For a successful completion of the project, this system was required to meet the following specifications:

1. Each end of a two party conversation must be able to transmit and receive simultaneously, as is the case with most public telephone systems. Such an arrangement is referred to as a duplex system.
2. This system should have most of the other characteristics of a commercial telephone system, such as:

a) there be a system of audio cues (dial tone, busy tone, ringing tone, etc.)

b) that no adjustments or technical knowledge be required of the user

c) that all of the interconnections be made automatically and be based on a simple number system

d) that all conversations be inaccessible to other parties

3. The system should be compact, and rely on portable power supplies at each station.
4. The system should make use of opitical (as opposed to electrical) types or splitters, employ fibres bidirectionally (rather than using separate fibres for transmitting and receiving), and have all signals carried over a single fibre (i.e. a multiplexed system).
5. Due to the varying numbers of taps, different positions of stations, etc., the system should be able to handle a 60 dB optical loss between any transmitting and receiving points. As well, the receivers must be able to handle multiple signals differing by up to 40 db in optical strength.
6. Although only 3 stations are required to demonstrate a basic tele-

phone system, the parameters and design specifications are to be based on a system with up to 100 stations.

7. It should be possible to change cable lengths and interchange stations without extensive electronic adjustments.

The format of the optical signals was chosen to be analog. This was done for simplicity and because of numerous technical problems encountered when trying to use a clock sync signal over the same link as the data, and over varying lengths of travel. The analog electrical data signals would intensity modulate the light from a suitable optical source. This is different from amplitude modulation in that the modulated intensity can never be less than zero. If all of the optical sources are to operate on the same optical wavelength, then the multiplexing must be done on the electrical data signal. This is done by using radio frequency subcarriers of different frequency as the different data channels. For the sake of simplicity, the voice signals would be amplitude modulated onto the appropriate RF subcarriers. Because of the availability of off the shelf components for the citizen's band frequency range (26.5 MHz - 27.3 MHz), the subcarrier frequencies were chosen from this range.

Once the subcarrier multiplexing had been chosen, a number of solutions become possible to the problem of establishing a conversation link between stations. One solution is to have each station contain the logic necessary to establish a link, provide the audio cues, etc. and the link is made by the station initiating the call. For an N station system, this can be implemented by each station containing its

own unique transmitting subcarrier channel but N possible receiving channels. The caller then receives on the called party's transmitting channel and tells the called party which receiving channel he should use. An N transmitter/1 receiver station cannot be used since a busy signal could not be produced.

Another approach is to use a separate "central" switching station where the links are made. The caller then dials the central station, identifying the called party and the central station activates the appropriate switched connections to link the caller and the called party. It is likely that there would be enough optical reflection in the system such that a significant fraction of the signal transmitted from a station will return to the receiver. If the receiving channel and transmitting channel for each station are the same, this reflected signal could swamp out the conversation. This could be avoided by using a talk/listen switch, but this would violate requirement #1. Instead, separate transmit and receive channels could be used. This is the case with the finished system. Now, 2N subcarrier channels are needed for an N station system.

This second approach was chosen for a number of reasons. With the central processor (C.P.) system, extra stations can be added without changing the existing stations. The individual stations are also much simpler, and this system as a whole is more easily adaptable for linkup with a commercial telephone system. Also, it is the cheapest to produce.

This C.P. version is similiar to a commercial telephone system. On the commercial system, the various "stations" produce different voice

signals on different wires leading to the central switching unit. These signals are all in the same frequency range (audio baseband), and the central switching unit puts the voice signals onto the appropriate outgoing wire. In this optical system, the different voice signals occupy different frequencies, but all on the same "wire". The C.P. then switches the voice signals onto the appropriate ougoing frequency.

The present system used near infrared LED's as the optical source. Either PIN photodiodes or avalanche photodiodes could be chosen as the detector. To avoid the high voltage power supplies required by an avalanche photodiode, PIN photodiodes were chosen.

Initially, multifibre optical cables were to have been used because the availability of couplers and the ease of making splitters. However, the recent development of fused splitters and couplers for single fibres offer lower loss and more flexability in splitting ratios. For these reasons, single fibre cable was used. Because of the short distances over which this cable would be used, dispersion is not a problem. Therefore, the choice between graded index or step index fibre was made only on availability.

There are three possible layout configurations for the optical cable: the star, the line (main trunk) and the tree (a combination of the star and the line).

In the star system, the losses increase linearly with N and all of the signals are roughly the same amplitude at a given receiver. However, the layout is not very flexible, and requires a larger quantity of fibre than the other two layouts.

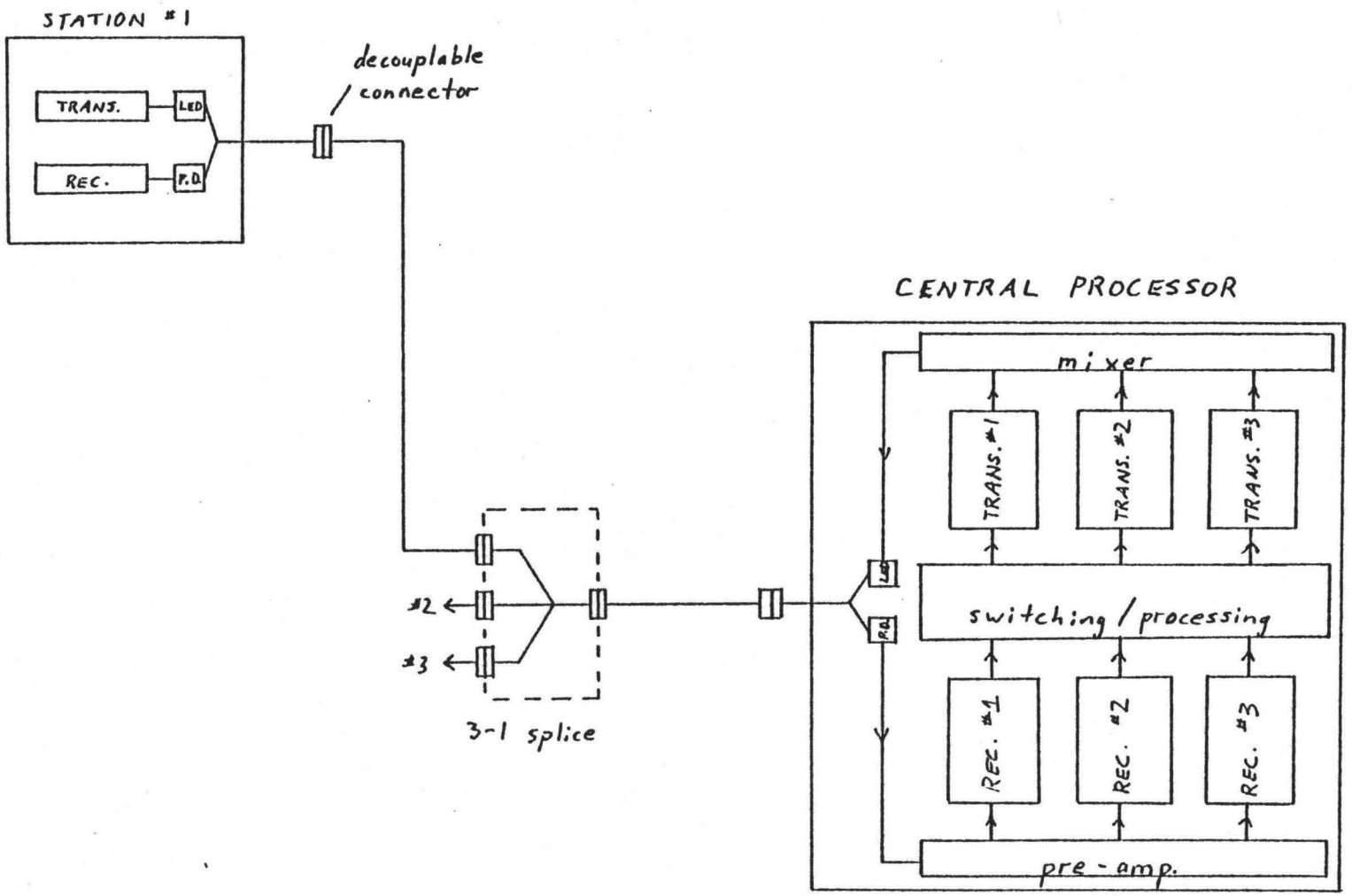

Fig. 1 Layout of Optical Fibre Telephone System

The linear, or main trunk, configuration requires the least amount of cable. However the dynamic range of the signals and the loss at the weakest station increase exponentially with N, due to consecutive tapping.

The tree configuration, which is normally used for CATV, has most of the advantages of the star and linear configurations. This was the configuration chosen.

As shown in Fig. 1, the geometry of the fibre in this tree layout takes the shape of a multi-branched "Y". The central processor which does the switching between the various subcarriers is situated at the base of the main arm of the "Y". A single fibre enters each of the telephone stations and the central processor. Inside these units, a fused fibre splice divides the light into two separate fibres. At the end of one of these fibre segments is an LED. Suitably modulated light is produced here and propagates out through the 2-1 splice into the tree. The other fibre segment runs into a photodiode. These detect the signals that have been modulated onto the light coming off the tree.

Each telephone station has an optical receiver consisting of a photodiode followed by an A.M. radio receiver and an optical transmitter consisting of an infrared LED at the output of an A.M. radio transmitter. A telephone station identifies the station to which he wants to speak by means of an ordinary telephone dial switch. This switch is used to interrupt the subcarrier coming from the calling station. The C.P. senses these interruptions and makes the necessary switched connections.

The central processor also uses a photodiode in its optical receiver and an LED in its optical transmitter. However, here there

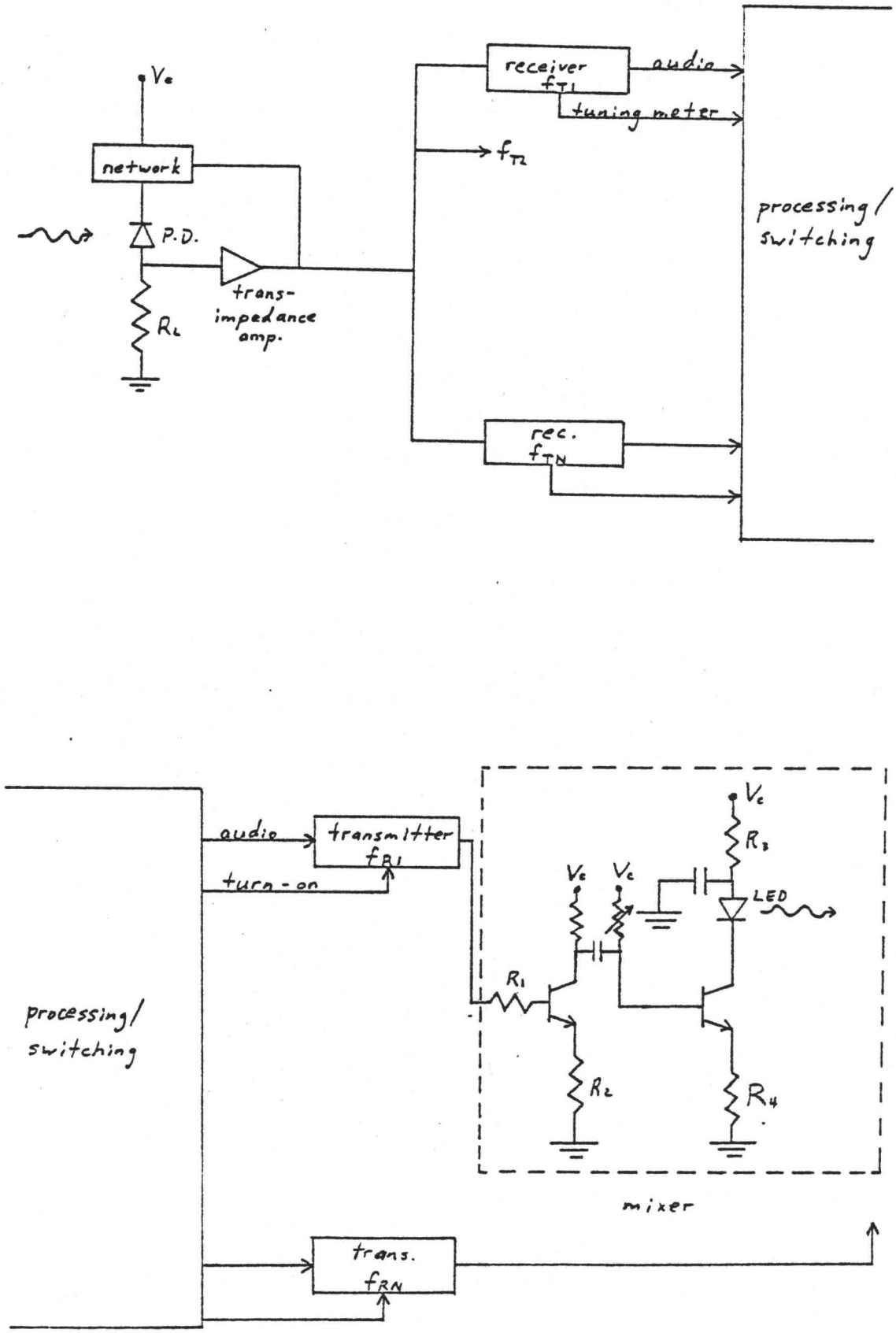

Fig. 2 Central Processor for O.F.T.S.

are N radio receivers and N radio transmitters interfacing with these opto-electronic components. In the C.P., there is a receiver/transmitter pair corresponding to each of the N stations. The C.P. receiver for a station is tuned to the subcarrier that the station transmits on and its C.P. transmitter is tuned to the subcarrier that the station receives on. The central processor is shown in Fig. 2.

Between the radio receiver bank in the C.P. and the radio transmitter bank, there is a switching network. When one station dials the phone number of another station, the C.P. counts the subcarrier interruptions. With this information, the proper audio switch is closed to connect the audio output of the C.P. receiver corresponding to the calling station with the audio input of the C.P. transmitter corresponding to the called station. Another switch is simultaneously closed to connect the reverse path. The same control signal that operates the audio switches also turns on the C.P.'s transmitter to the called party. When the called party's phone senses this subcarrier turn on, ringing stops and two way conversation takes place through the C.P. As well as the basic network of audio switches, the C.P. also contains the TTL logic controlling the switching and the various audio cues (dial tone, busy tone, ring tone). This logic is such that these tones are heard under the same circumstances as in a commercial telephone system.

The work on this project was divided into three sections:

(1) switching logic and peripherals - J. Goodwin

(2) optical fibre, splitters and couplers - G. Duck

(3) analog electronics - A. Jurenas

Parts 1,2 and 3 are described in detail in the reports Goodwin, Duck and Jurenas. The system with three telephones, C.P., power supplies and interconnections is operational, and is now undergoing detailed evaluation. The latter work is being done by V. Tzannidakis, who will report on it at a later date.

AMENDMENT TO CHAPTER 1

Due to the complexity of the analog electronics, it shall be described in two reports. This first report, entitled 'Analog Electronics', will describe and explain the theory of operation of the subsystems and individual circuits which comprise the analog electronic portion of this project. The second report, entitled 'System Analysis' will examine the operation of the more complex circuits in greater and more theoretical detail. It will also describe a preliminary evaluation of the system operation, modifications to the Central Switching and Logic Circuitry, and an analysis of the system configuration, with an emphasis on areas requiring further development work. The report of V. Tzannidakis will deal with an alternative system configuration with respect to signalling, channel switching, and frequency allocation.

CHAPTER 2

SYSTEM PARAMETERS

I DESIGN SPECIFICATIONS

The design parameters of the analog electronics of the system are listed in Table 1. The selection of most of these specifications was directly related to satisfying the various system requirements listed in Chapter 1. The ability of the system to handle a 60 db optical loss, and the ability of the receivers to handle signals by 40 db in optical strength, were of particular importance. The other specifications were chosen according to accepted practice in communications engineering.

The practical and theoretical considerations which led to the selection of the specifications in Table 1, will be detailed in the next section.

II DERIVATION OF DESIGN SPECIFICATIONS

This section will detail how and/or why the various design parameter specifications, listed in Table 1, were chosen.

(i) Transmitter

The optical power output of the transmitter (or the Mixer

TABLE 1(a): DESIGN PARAMETERS

TRANSMITTER

Description	Specification
Power Output (Optical - at LED)	1 mW (0 db mW) optical
Frequency Stability (Subcarrier)	±.005%
Spurious Emissions (Subcarrier)	-110 db (maximum) relative subcarrier at 20 KHz from the subcarrier frequency -50 db (maximum) relative to subcarrier at 10 KHz from the subcarrier frequency
Distortion (In Audio Baseband)	5% for sine wave signals at levels required for 33% modulation
Modulation Index (Subcarrier AM)	33%
Modulation Index (Optical Carrier IM)	90%
LED Current (C.P.)	120mA average, 240mA peak
LED Current (Station)	100mA average, 190mA peak

TABLE 1(b): DESIGN PARAMETERS(CONT'D)

RECEIVER

Description	Specification
Sensitivity (Optical)	1nW(-60dbmW) for 10db S/N
Maximum Input Level (Optical)	150uW(-8.2dbmW) composite
Dynamic Range (Subcarrier)	80db
IF Selectivity	81 db at ±10 KHz, 145 db at ±20 KHz
Intermodulation and Cross Modulation	-60 db maximum (with respect to the subcarrier), with a 3 channel input, over the full dynamic range
Frequency Stability (Local Oscillator)	±.005%
Local Oscillator Leakage	1uV with external isolator, 10uV without external isolator
Audio Distortion	1% for 33% modulation index
Audio Output Power	100mW into 10 ohms

TABLE 1(c): DESIGN PARAMETERS(CONT'D)

SYSTEM

Description	Specification
Total Distortion	12.5% station to station
Channel Bandwidth	10KHz for marginal performance 20KHz to meet system performance specifications
Crosstalk	-50db (with respect to audio level) or below noise level, for (a) an optical dynamic range of 40db, and 20KHz channel spacing (b) an optical dynamic range of 15db, and 10KHz channel spacing
Audio Bandwidth	3KHz(300Hz - 3.3KHZ,standard Bell Telephone Voice Channel Bandwidth)

and LED Driver stage in the Central Processor (C.P.)) LED is typical for LED's with fast risetimes (6 nsec nominal - see report by Gary Duck for specific LED characteristics). This output is available only at the maximum bias current (approximately 150mA). The internal power (heat) dissipation capability of the device is the primary limit on the available average optical power output.

The subcarrier frequency stability is determined by the oscillator crystal, and the specification shown is typical for C.B. (Citizen's Band) crystals. Spurious emissions from the transmitter are caused by oscillator noise, modulator non-linearity, and by out-of-band components in the transmitter audio input. To satisfy the requirement of a 40db optical dynamic range mentioned in Chapter 1, an 80db subcarrier dynamic range was required (the reason for this is described later in this section). The index of modulation used was 33%, which means that the message content of the received signal is at a level of 10db below the subcarrier level. Therefore, to maintain a 20 db S/N (Signal to Noise) ratio in Channel X, when the received level of Channel Y (an adjacent channel) is 80db higher than that of Channel X, the spurious emissions from Channel Y must be less than -110db (with respect to the subcarrier). This figure is compromised of 80eb for the dynamic range, 10db for the 33% index of modulation, and the 20db S/N ratio. This emission specification is extremely difficult to achieve with close channel spacing. Accordingly, it was specified for a 20KHz channel separation. With the standard C.B. channel spacing of 10KHz, the specification allows no more than

10db optical (20db subcarrier) dynamic range, for a 20 db S/N ratio.

The distortion in the audio baseband is primarily caused by limiting (peak clipping) in theaudio processing circuitry. It occurs because the clipping action doesn't occur at a single voltage level, but rather over a narrow range of voltage centered about the nominal clipping level. This clipping level corresponds to 33% modulation,' and so any waveform which can produce 33% modulation will have been limited (distorted) to a certain extent.

The modulation index was chosen for the following reason. When a low index of modulation (typically 30%) is used, the envelope detector in the receiver is not seriously affected by phase and amplitude distortion in the IF stages. An index of 33% was used because the ratio of maximum to minimum subcarrier levels of a fully modulated wave is simply 2 to 1, which greatly simplifies setting up and checking modulation levels. The modulation index of the optical carrier was limited to 90% to avoid the non-linearity of the LED at output light levels near cutoff.

The station LED's were driven at 2/3 the maximum rating to avoid possible overloading and to prolong their lifetimes. The C.P. LED was driven at 120mA to help compensate for the fact that the message content of the signal from the C.P. is shared by 3 transmitters. This means that each transmitter produces only 30% optical modulation (compared with 90% at the stations), and 90% modulation is produced only when all three transmitters are on.

(ii) Receiver

Since the output of each transmit LED is 1mW (nominal), and the system must be able to handle a 60db optical loss, the sensitivity must be at least 1nW. This is specified for a 10db S/N ratio which, although it is fairly noisy, still ensures clearly intelligible speech and control signals (dial pulses).

The effective load impedance of the photodiode was calculated to be approximately 8 kilohms, and the photodiode responsitivity is approximately .5 A/W. It was assumed that there would be at least a 3db coupling loss between the photodiode and the receive fibre. The receiver front-end was designed to handle a 100mV input signal. Taking the above factors into account, as well as the 10 db loss due to 33% modulation, the maximum optical input level is given by 100mV (maximum input signal) 2 (coupling loss) 3 (30% modulation loss)/ .5 A/W (Responsitivity) / 8000 V/A (transimpedance) = 150 microwatts = -8.2dbmW. This number refers to the composite input level (i.e. the total from all channels).

The photodiode converts optical light power into electrical current. However, the electrical power in a circuit is proportional to the square of the current. Thus, an optical power ratio of x decibles. Note that although P (electrical power) I^2, a decible is defined as 20 log(I ratio) or 10 log(P ratio), so 2x decibles applies to both the electric current and power. Therefore, to obtain the dynamic optical power range of 40db specified in Chapter 1, the receiver must be able to handle an 80db electrical dynamic range.

The IF selectivity is simply the sum of the selectivities of the three IF transformers and the two ceramic IF filters. Preliminary tests showed that the typical attenuation of an out-of-band signal (relative to a signal of the same strength at the center IF frequency) was 7db at 10KHz, and 15db at 20KHz. These results match the theoretical predictions for single tuned circuits to within a few decibles. Similar tests on the ceramic filters revealed selectivities of 30db at 10KHz, and 50db at 20KHz.

Intermodulation and crossmodulation interference will be greatest when the total input power from all three channels is the maximum allowed (-8.2 dbmW), and one of the channels is only 2 or 3 db below this value. To maintain reasonable crosstalk immunity, the maximum intermodulation and crossmodulation level should be 50 db below the maximum audio level, or equivalently, 60 db (recall the 10 db loss due to 33% modulation) below the sub-carrier level.

The frequency stability of the local oscillator is determined by the crystal, as in the transmitter. The local oscillator leakage specifications are based on empirical results. Without the isolator, crosstalk was clearly audible but rather noisy. This 'crosstalk noise' was additional tothe desired channel background noise. Since the interfering channel's signal level was well above its own noise level, it was assumed that the local oscillator leakage was not more than 10 db above the desired channel noise level. This noise level was found to be approximately

3 uV so that the local oscillator leakage was probably no more than 10 uV. With the isolator installed, no crosstalk whatever was noticeable. Thus, assuming the isolator provides at least 20 db isolation , the maximum expected local oscillator leakage is 1 uV, which is 10 db below the noise level.

The receiver audio distortion specification is based on RCA's specification for the CA3088E AM subsystem, when used in a similar configuration. Initial tests indicated that at low levels of modulation (namely 33%), IF stage distortion did not significantly increase the overall audio distortion. The specified audio power output level is sufficient to drive a typical 4 inch speaker, a feature which is very useful during troubleshooting and for qualitative tests.

(iii) <u>System</u>

Assuming that the cumulative distortion adds in the worst possible way (namely that distortion of previous distortion produces an increase in the distortion level), the overall distortion for a complete station to station link is derived as follows. There are two transmitters in the link, each producing 5% distortion, and two receivers, each producing 1% distortion. The maximum distortion is therefore 1.05 1.05 1.01 1.01 - 1 = .125 = 12.5%.

The standard C.B. channel bandwidth is 10 KHz. However, a 20 KHz channel bandwidth was required to fully meet all the requirements stated in Chapter 1. The crosstalk specification for 20 KHz

channel spacing is determined by the receiver intermodulation and crossmodulation specification, discussed in the previous subsection. The crosstalk specification for the 10 KHz channel spacing is determined by the receiver IF selectivity, which is 81 db. To obtain 50 db crosstalk immunity for a 15 db optical dynamic range (which requires a 30 db subcarrier dynamic range), the IF selectivity required is 50 db + 30 db = 80 db. Spurious emissions from the transmitter are not necessarily intelligible (they consist of various combinations of noise and audio harmonics). Those emissions which are not intelligible do not qualify as crosstalk, and so there is no direct relationship between crosstalk and transmitter spurious emissions. Any such relationship would have to be determined by either experimental analysis, or by a very detailed examination of the precise transmitter characteristics.

The audio bandwidth is primarily determined by the receiver IF stages, and is typical of voice channel bandwidths used in telecommunications.

III CHANNEL ALLOCATION SCHEME

Table 2 gives the frequency allocation scheme. Note that the system channels A,B,C, are duplex channels. This means that two distinct subcarrier frequencies are used for each channel. One frequency is used for transmission from the station to the Central Processor; the other is used for transmissions from the Central Processor back to the corresponding station.

TABLE 2: FREQUENCY ALLOCATION SCHEME

System Channel	Channel Designation* For Tx - Rx Link	Subcarrier Frequency (MHz)	Rx Local Oscillator Frequency(MHz)
Station To Central Processor			
A	10	27.075	26.620
B	14	27.125	26.670
C	2	26.975	26.520
Central Processor To Station			
A	12	27.105	26.650
B	20	27.205	26.750
C	5	27.015	26.560

* North American Citizen's Band Designations

It should be noted here that the optical 'carrier' is a band of incoherent light in the infra-red region. There is only one 'carrier' in the entire system. All the channel separation at the receivers is performed at the subcarrier level. In an 'over the air' radio system, you never have transmitters, which are significantly separated spatially, putting out the same frequency carrier, but with different subcarriers. Two of the reasons for this difference are:

(a) A radio transmitter puts out a coherent 'monochromatic' signal which may cancel out, beat, etc. with another signal of the same frequency. An LED, on the other hand, puts out incoherent, wide band light, the intensity of which adds algebraically to that of any other LED's in parallel;

(b) There is no reason to use this scheme in radio systems. Either different carriers are used, or else the subcarriers themselves bacome the radio system 'carriers'. However, this scheme was inherent in the optical communication system because of the electrical to optical conversion of the signals.

CHAPTER 3

PRELIMINARY SYSTEM EVALUATION

I QUALITATIVE EVALUATION

When the analog electronics of the system were complete, they were interconnected to the logic system. Serious operational and circuitry problems were found with the logic system, although the remainder of the system could be made fully operational by by-passing the logic circuitry via the front panel jacks. This is described in the following subsection.

After the required corrections were made to the logic system, an operational system test was made. Also, several persons who were not involved in this project, were invited to operate the system and offer their opinions concerinig its' operation. The basic results are discussed in the subsection entitled 'General Performance'.

(i) Logic Problems

The first problems observed in the logic system were erratic switching and dial pulse miscounting. After rechecking all system levels (analog and logic), troubleshooting was performed, and circuit problems were discovered with two of the logic subsystems. These problems, and the corrective measures taken are described in Appendix A.

Next, it was found that the ring signal being sent back to the caller was very weak, and that the noise level increased sharply during the ring (calling) period. Also, it was discovered that the sidetone level during dial tone, busy signal, or dialing periods was much greater than during the ringing period or the actual call. The solution to this problem was the addition of the Sidetone and Auxiliary Gating Unit, described in Appendix B.

Finally, whenever any handset was replaced on its' station cradle switch, a short burst of buzzer tone (ring signal) would occur. Also, short bursts of buzzer tone would occasionally occur at random intervals. These problems were caused by the buzzer drive circuitry (which is part of the logic system, but located in the individual stations). The corrective measures taken are described in Appendix C.

(ii) General Performance

After the corrections described in the preceding subsection were made, the logic system functioned perfectly, and consistently. However, although not an operational problem, it was noticed that the ring tone sent back to the caller sounded more like an interrupted dial tone (of a slightly different frequency) than a typcial Bell system ring tone.

System operation was checked in all possible operational configurations. There was no detectable crosstalk at any of the stations, or over any of the links. Although the system noise was

clearly audible, it was well below the level which would cause conversational problems. The frequency response of the system appeared to be quite adequate, and typical of telephone systems. Audio distortion was noticeable, but it also was well below the level which would seriously hinder speech intelligibiility, or would prevent recognition of a caller's voice. Receive and side-tone audio levels were typical of a standard telephone set. There were no annoying audio spikes or noise bursts during dialing or conversation, unlike what is often encountered over commercial telephone systems. The operation of the system was the same as that for a standard telephone, as specified in the requirements listed in Chapter 1.

II QUANTITATIVE EVALUATION

Detailed measurements of most system parameters were not made, as this would involve extensive development of reliable test procedures, and the design and construction of fairly elaborate test fixtures. However, some basic measurements of several system parameters were made.

The photodiode current at the Central Processor ranged from 0.5 microamps to 0.8 microamps (depending on which station was transmitting). Assuming a photodiode responsitivity of 0.5 A/W, these currents correspond to optical input levels of 1 microwatt to 1.6 microwatts.

The noise level out of the transimpedance amplifiers

of the receivers was measured indirectly. It was determined to be approximately 3 microvolts RMS. The maximum frequency error in the subcarrier, when converted to an IF frequency, was found to be 1.1 KHz. Although this is consistent with the specifications of the crystals(which control the subcarrier and local oscillator frequencies), this error is far too large for a system whose audio bandwidth is 3.3 KHz.

The RF output level of the LED drivers in the stations and the Central Processor was measured, and was found to vary as follows. When an LED driver was turned on (after having been off for at least several minutes), the RF output level would start to drop, and then would level off to about 67% of its' initial value after approximately one minute. This is of no consequence in the Central Processor, since the LED driver is normally always on. However, in the stations it may present a problem. The LED RF levels are adjusted well after this initial one minute 'warm up' period has passed, and this adjustment is for a 90% IM index of modulation. This means that initially, the IM index of modulation will be 90/.67 = 134%. This may cause intermodulation (and therefore crosstalk) during the first minute of station operation, although this was not noticed during the operational tests.

A similar problem to that of the preceding paragraph was noticed in the C.P. Mixer. When all three C.P. transmitters are operating, the peak RF level should be three times that of a single transmitter. However, it was found that the peak RF level

was only twice that of a single transmitter, and this phenomena was independent of time.

The audio signal to noise (S/N) ratio for a station to station link was measured, and was found to be approximately 30 db. This will be examined in greater detail in the next section.

An in-depth experimental analysis of the system would require the examination of all the other system parameters listed in Table 1. These were not made for the reasons mentioned in the first paragraph. The equipment which would be required for these tests includes, but is not limited to, the following: calibrated transmitter and receiver test units; a direct (i.e. LED to photodiode, bypassing all couplers) fibre link; a variable, calibrated, in-line, optical attenuator; a high-sensitivity (-137 dbm) RF spectrum analyzer; a high sensitivity network analyzer; a high impedance, active, RF probe; an RF current probe; an audio spectrum analyzer with a wide dyanmic range (110 db); and an audio distortion analyzer.

III SYSTEM PERFORMANCE CALCULATIONS

(i) Optical Path Transmission Loss

The typical received optical power over a station to Central Processor link was 1 microwatt or -30 dbmW. This value corresponds to a 30 db path loss, and is about 11 db higher than expected from theoretical calculations and optical component specifications. The probable breakdown of losses, based on more

TABLE OPTICAL PATH LOSS FOR STATION TO C.P. LINK

Description	Theoretical or Expected Value	'Realistic' Estimate
LED Output Power	0dbmW(nominal)	-3dbmW
LED-Fibre Coupling Loss	4db	4db
2 to 1 Coupler	3db	4db
2 Fibre Jacks	1db	2db
3 to 1 Coupler	5db	6db
2 Fibre Jacks	1db	2db
1 to 2 Splitter	3db	4db
Photodiode Coupling Loss	3db	3db
Fibre Loss(50m)	negligible	2db
Total Loss	20db	27db
Net Received Power	-20dbmW	-30dbmW

realistic loss estimates, is given in Table 2. The estimate of 2 db loss in the fibre was based on the fact that, during the tests, the fibre was wound around a 10 cm diameter spool, which can cause an increase in fibre attenuation. The LED was not driven at full power, which explains the -3 dbmW estimated output level. That estimate, along with all the others, included typically a 1 db margin of error over theoretical loss predictions.

(ii) Audio Signal to Noise Ratio

As mentioned in the previous section, the audio signal to noise (S/N) ratio was measured for a station to station link, and found to be approximately 30 db. This value closely matches the value obtained by calculations based on other measurements and theoretical considerations. These are as follows.

The measured photodiode current at the Central Processor was typically 0.5 microamps. The transimpedance amplifier was based on an RCA design (with their consent), and based on their published values, the expected transimpedance is 8000 V/A. This means that the optical carrier signal level is $.5 \times 10^{-6}$A x 8000V/A = 4mV. The measured noise level from the transimpedance amplifier was 3 microvolts. Therefore, the optical carrier to noise level is $4 \times 10^{-3}/3 \times 10^{-6} = 1333 = 62$db.

According to experimental data on the LEDs, their risetime corresponds to a 3 db point of 30 MHz. This means that there is a subcarrier (27 MHz) loss of 6 db at the photodiode. The LED was modulated to 90%, which corresponds to a subcarrier loss of 1 db

relative to the carrier (recall that a 1 db optical loss is equivalent to a 2 db electrical or subcarrier loss). As mentioned in Chapter 2, 33% modulation of the subcarrier corresponds to a 10 db loss in the modulation level, relative to the subcarrier. The RF section of the receivers does not provide any image rejection, thus the noise from the image channel adds to the desired channel, and increases the noise level by 3 db.

Since there are two station to C.P. paths in a station to station link, we can expect twice the noise as over a single path, which adds another 3 db of noise. Finally, as described in Chapter 2, the C.P. LED is driven at 120 mA, whereas the station LEDs are driven at 100 mA. However, each C.P. transmitter IM modulates the optical carrier by only 30% (90%/3). This is equivalent to 90% modulation of an LED which is driven at 40 mA. Thus, the 'in-channel' optical power from a C.P. transmitter is only 40% (40mA/100 mA) of that from a station transmitter (on which the previous calculations were based). This corresponds to an additional 8 db of signal loss. It is (reasonably)assumed that the optical path loss from the station to the C.P. is similar to the opposite path, since the coupler losses are symmetric.

The overall S/N ratio can now be calculated as follows:

Optical Carrier to Noise Ratio	=	62 db
LED risetime loss	=	-6 db
90% IM modulation loss	=	-1 db
33% subcarrier modulation loss	=	-10 db

loss due to image noise	=	-3 db
loss due to return path	=	-3 db
loss due to lower C.P. LED output power	=	-8 db
Final S/N ratio	=	31 db

CHAPTER 4

TRANSIMPEDANCE AMPLIFIER DESIGN THEORY

I GENERAL

This chapter will examine the sources of noise in the photodiode stage, the operation and selection of a feedback scheme, and some unusual feedback schemes which were considered, but not used due to the very large development time they would have entailed.

II NOISE

The equivalent circuit of a reverse biased PIN photodiode is shown in Fig. 3. At the frequencies and impedance levels used in the actual circuits, the resistances Rp ($>$ 100K) and Rs ($<$ 100ohms) are negligible. Therefore, the equivalent photodiode load circuit appears as shown in Fig. 4(a) when feedback is not used, and in Fig. 4(b) when feedback is used. The actual circuit used corresponds to Fig. 4(b). Feedback was used to decrease the effective reactance (X_{Cd}) of Cd by the Miller Effect (illustrated in Fig. 5). This increases the load impedance (which is X_{Cd} // R_L // Z_{in}) seen by i_d, which in turn increases the received signal, given by $S = i_d \times (X_{Cd}/(1-A_1))// R_L //Z_{in}$ (1). Zin is the input impedance of the amplifier connected to the load circuit (see Q101 in Fig. 7), and $A = v_{in}/v_f$ (referring to Fig. 4(b)).

The resistive part of the load impedance will produce thermal noise. Models of thermal noise sources are shown in Fig. 6.

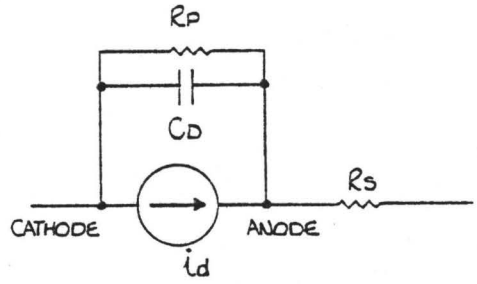

FIGURE 3

EQUIVALENT CIRCUIT OF REVERSE-BIASED PIN PHOTODIODE

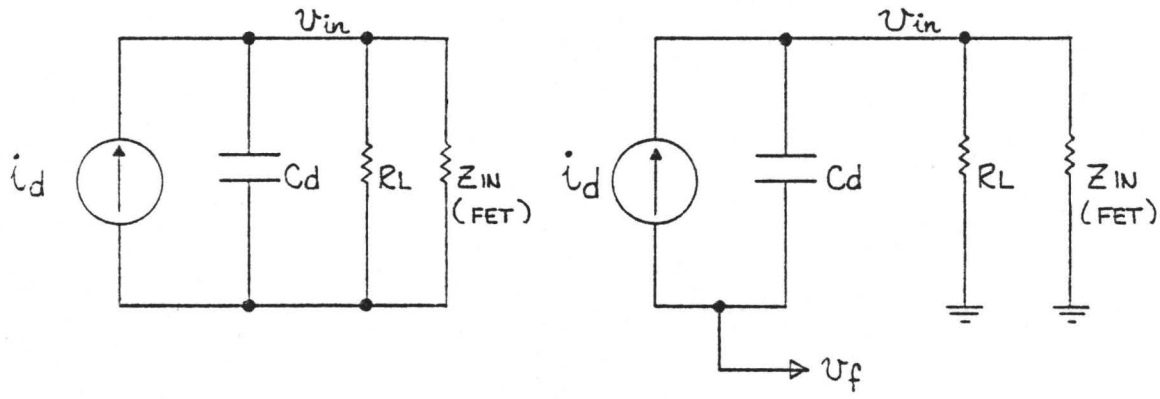

(a) WITHOUT FEEDBACK (b) WITH FEEDBACK

FIGURE 4 EQUIVALENT PHOTODIODE LOAD CIRCUIT.

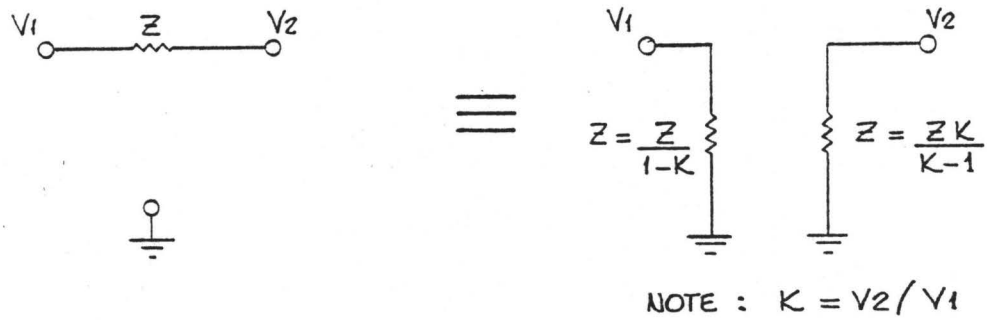

FIGURE 5 EXAMPLE OF MILLER'S THEOREM.

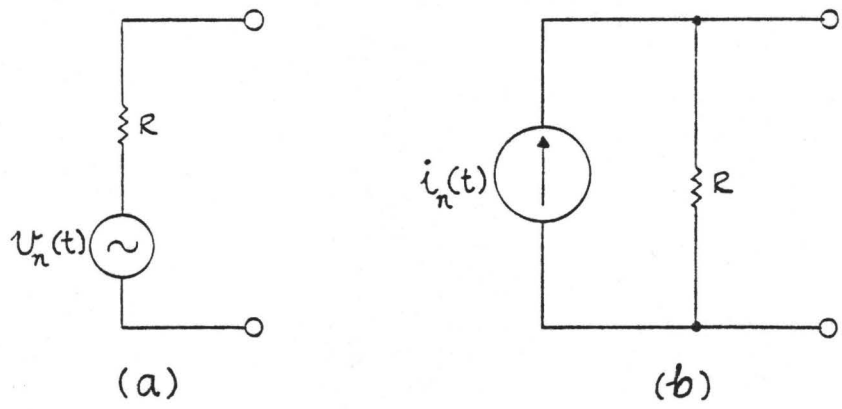

THEVENIN EQUIVALENT CIRCUIT NORTON EQUIVALENT CIRCUIT

FIGURE 6 MODELS OF THERMAL NOISE

In Fig. 6(a), the RMS value of v_n (t) is given by $v_n = (4kTRB)^{\frac{1}{2}}$, where B is the channel bandwidth. Similarly, in Fig. 6(b), the RMS value of $i_n(t)$ is given by $i_n = (4kTB/R)^{\frac{1}{2}}$. Now, Z_{in} is the input impedance of a source follower amplifier, which is a much higher value (approximately 20 kilolms/(1-A)) than R_L (20 kilohms), so it can be ignored. Therefore, using the noise model of Fig. 6(a), the noise voltage across Z_{in} in Fig. 4(b) is given by $X^1_{Cd} = X_{Cd}/(1-A)$. It was found experimentally that X^1_{Cd} was approximately 8 kilohms. Therefore, using the values $B = 10^4$, $K = 1.38 \times 10^{-23}$, and $T = 293$, we obtain $v_{nz} = 0.5$ microvolts. This is much lower than the 3 microvolts moise level which was measured. However, there is a much greater source of noise in the amplifier which is connected to the photodiode load circuit. This is the bias current shot noise.

Examining the actual photodiode stage circuitry shown in Fig. 7, we note that the source of Q101 is biased at approximately 6V. Thus, the source current is 6V/2.2kilohms, = 2.7 mA. The shot noise current due to this source current is given by $i_t = (2qI_sB)^{\frac{1}{2}} = 2.96 \times 10^{-9}$A, where q = elementary charge = 1.6×10^{-19}C. The voltage across R107 due to this shot noise current should be $2200 i_t = 6.5$ microvolts, but this is twice what was measured. The probable reason for the discrepancy is the drain to source capacitance of Q101, which is approximately 6pF (note that the drain of Q101 is at A.C. ground). The effective impedance of this capacitance, in parallel with R107, is approximately 680 ohms, which yields a shot noise voltage of $680\ i_t = 2$ microvolts. This, added

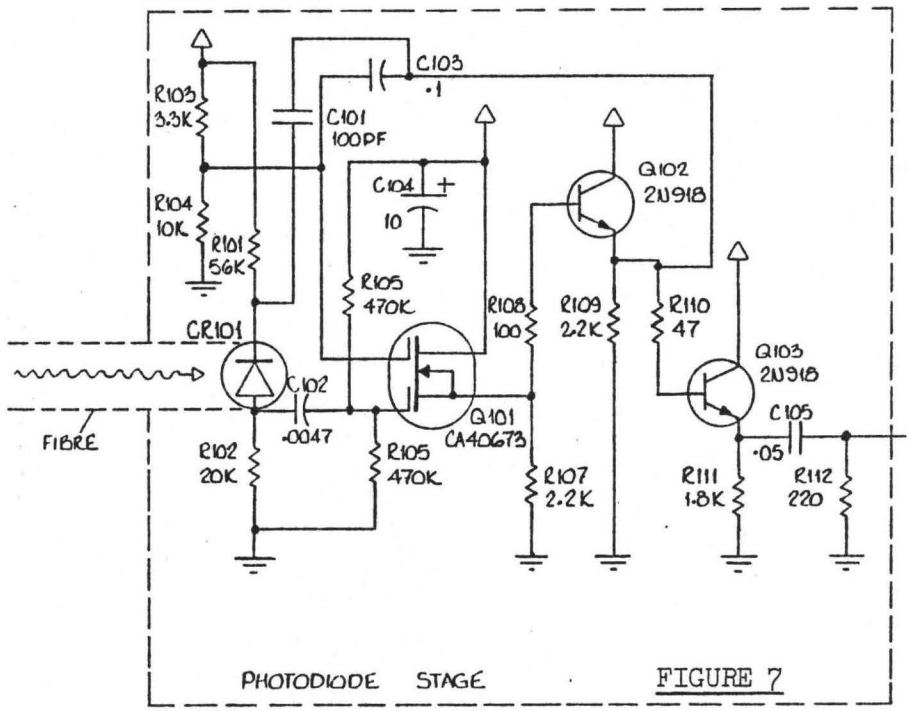

FIGURE 7

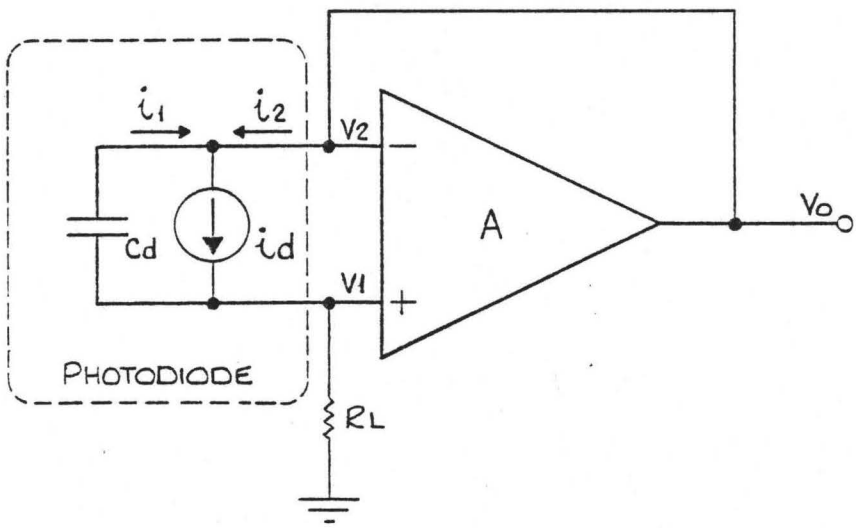

FIGURE 8.

SIMPLIFIED MODEL OF TRANSIMPEDANCE AMPLIFIER USING POSITIVE FEEDBACK.

to the thermal noise and various other small noise sources, yields the measured 3 microvolt noise level.

III FEEDBACK SCHEMES

Fig. 8 shows a simplified model of the transimpedance amplifier used in this system. The actual circuit, shown in Fig. 7, was developed by the RCA Electro-Optics Division, and was used with their consent.

The output voltage V_o in Fig. 8 is derived as follows. Let

$$V_1 - V_2 = V_x \tag{3}$$

Therefore,

$$V_o = A\ V_x \tag{4}$$

However, by Kirchhoff's Law,

$$V_o = V_1 - V_x \tag{5}$$

Combining (4) and (5) we obtain

$$V_1 - V_x = A\ V_x \tag{6}$$

and therefore

$$V_1 = V_x\ (A+1) \tag{7}$$

Combining (7) and (4) we obtain

$$V_o/V_1 = A\ V_x/V_x\ (A+1) = A/(A+1) \tag{8}$$

The gain of a common drain amplifier is given by $A_v = g_m\ R_s/(1 + g_m R_s)$. So $A = g_m R_s$ in (8) if the amplifier shown in Fig. 8 was a single source follower. The actual circuit used a source follower driving an emitter follower, but the results are similar.

By Miller's Theorem, the reactance of Cd will be increased

to $$X^1_{Cd} = X_{Cd}/(1-K) \quad (9)$$ where

$$K = \frac{V_o}{V_x} = \frac{A}{(1+A)} \quad (10)$$

Substituting (10) into (9), we obtain

$$X^1_{Cd} = X_{Cd}/(1 - \frac{A}{(1+A)}) \quad (11)$$

(11) corresponds to the factor $X_{Cd}/(1 - A_1)$ in equation (1), if $A_1 = A/(1+A)$. The thermal noise in Fig. 8 is caused by R_L, and the resulatnt noise at the (+) terminal is given by equation)2).

The most commonly used transimpedance amplifier circuit is that shown in the schematic in Fig. 9. The simplified model of this circuit is shown in Fig. 10. This circuit uses negative feedback, unlike the last circuit which used positive feedback. R_{FB} corresponds to R_L in the previous circuit. Assuming the amplifier has a negligibly high input impedance, the impedance seen by i_2 is R_{FB}/A. Therefore,

$$i_2 = i_d X_{Cd} /(X_{Cd} + R_{FB} /A) \quad (12)$$

Without going through the calculations, it can easily be shown that if R_L and A in Fig. 8 have the same values as R_{FB} and A respectively in Fig. 10, the two schemes will provide the same level of signal. However, the output noise in Fig. 10 will be

$$v_n = (4KTBR_{FB})^{\frac{1}{2}} \quad (13)$$

For $R_L = R_{FB}$, equation (13) gives a higher noise level than equation (2) which applies to Fig. 8.

It should also be noted that in the actual circuits (shown in Fig. 7 and Fig. 9), the positive feedback scheme has

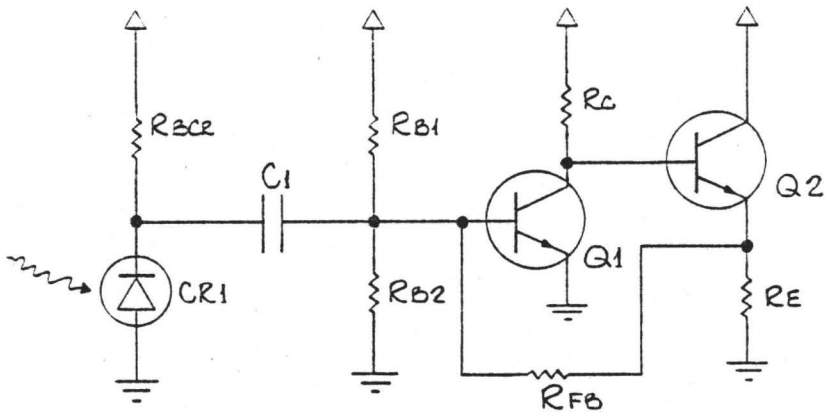

FIGURE 9

SIMPLIFIED SCHEMATIC OF TRANSIMPEDANCE AMPLIFIER USING NEGATIVE FEEDBACK.

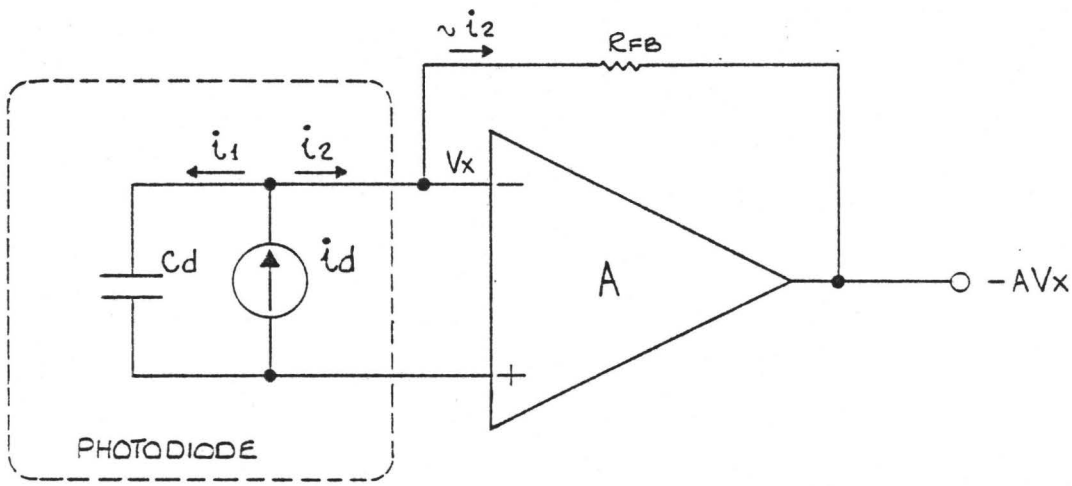

FIGURE 10

SIMPLIFIED MODEL OF TRANSIMPEDANCE AMPLIFIER USING NEGATIVE FEEDBACK.

only current gain, while the negative feedback scheme has voltage gain. Experience shows that instability and oscillation are more likely to occur when there is voltage gain present.

IV TUNED DIODE SCHEMES

Figures 11 and 12 show two other schemes for reducing the loading effect of Cd. In Fig. 11, an inductor is used to 'tune out' Cd. The effective impedance of the tank circuit comprised of L and Cd is simply QX_{Cd}, where Q is the quality factor of the tank circuit.

The circuit shown in Fig. 12 is simialr to that in Fig.11, except that feedback is also employed. The effective impedance across the diode current source in this case is

$$QX_{Cd} /(1 - \frac{A}{1+A}) \qquad (14)$$

It was not possible to abtain stable operation with either of these schemes. However, the possible increase in signal gain (and therefore S/N ratio), especially that indicated by equation (14), warrants further research into the use of these schemes in narrow-band systems.

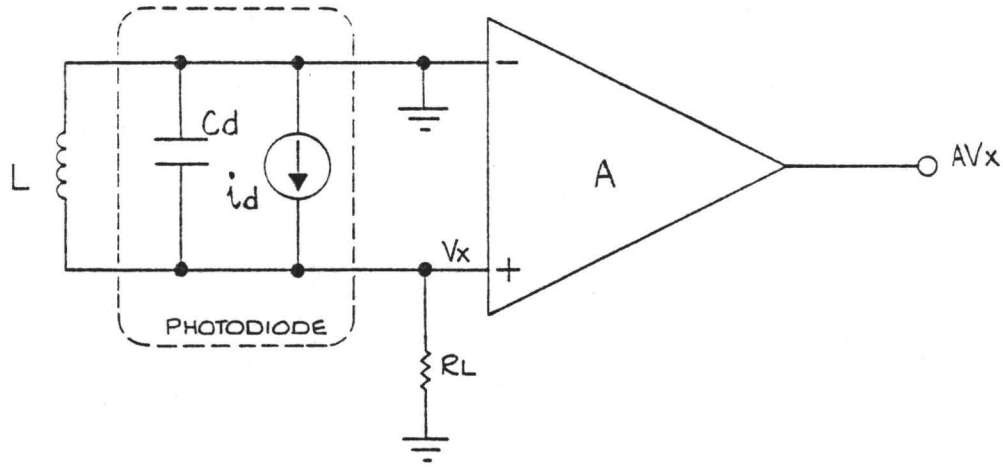

FIGURE 11. TUNED INPUT TRANSIMPEDANCE AMPLIFIER.

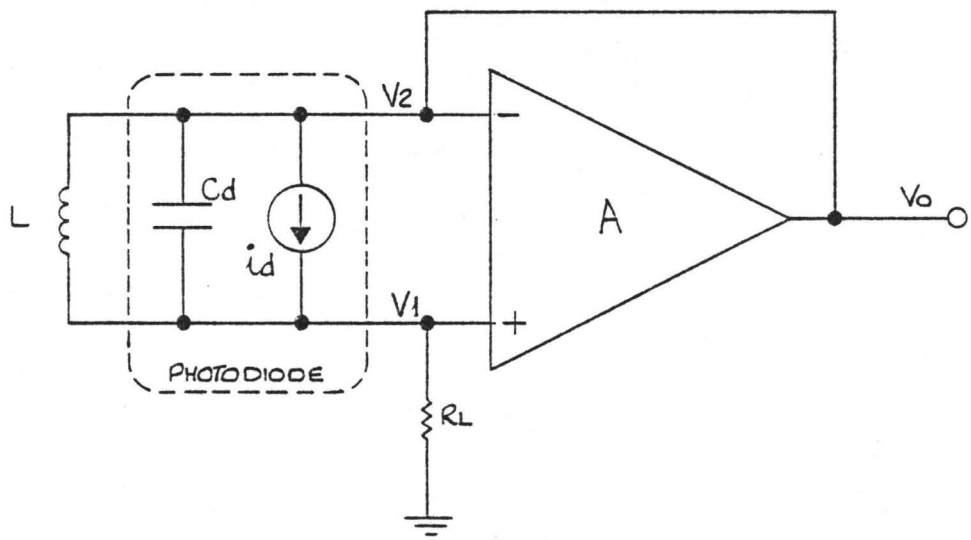

FIGURE 12.

TUNED INPUT TRANSIMPEDANCE AMPLIFIER WITH POSITIVE FEEDBACK.

CHAPTER 5

FURTHER DEVELOPMENT AND RESEARCH

I GENERAL

Next to demonstratin the feasability of the system, the most important achievement of this project was providing a good indication of the areas where further development and research was required. These areas range from the system level to the individual component level. The following sections list and describe these areas.

II OVERALL SYSTEM

(i) FM Modualtion

The most significant improvement to the system operation would be the use of FM subcarrier modulation. AM modulation had been chosen because it appeared that the circuits required would be for less complex than those for an FM system. However, it was found that the great difficulty in designing AM circuits which satisfied the extremely stringent requirements of Chapters 1 and 2, well exceeded any anticipated difficulty which would arise from the greater complexity of FM.

The greatest difficulty with AM is the requirement for very linear RF amplifiers in transmitters and receivers. The linearity is required to eliminate crosstalk and interference due to intermodulation and crossmodulation. This linearity requirement

is particularly difficult to achieve with the extremely large subcarrier dynamic range (80db) and maximum input level (135db above the 50 ohm noise level (which is 30 db below the trans-impedance amplifier noise level)).

When an FM modulated wave passes through RF amplifiers which have amplitude non-linearities, the resultant distortion appears only at integral multiples of the subcarrier frequency, which can be easily filtered out. Thus, an FM transmitter can use simple and efficient class C RF amplifiers. Since there is generally more than one signal entering the FM receiver, the situation is not as simple as with the FM transmitter. However, the FM receiver will require for less RF amplifier linearization than an AM receiver, because of the FM 'capture effect'.

The capture effect occurs in any FM receiver which uses a limiter, a PLL (Phase Locked Loop), or any other AM-rejecting detector after the IF stages. This capturing action works as follows. If an interfering signal (AM, FM, or noise) is of a lower level than the desired FM signal, the reciever will 'lock on' to the desired signal and completely reject (assuming perfect limiting) the interfering signals. This action is analogous to passing an AM wave through a limiting (i.e. constant RF output level) device. The carrier will be passed, and the sidebands will be completely rejected.

Crossmodulation products are proportional to the desired signal's amplitude. Thus, for the parameter specifications listed

in Chapter 2, the crossmodulation would never even approach the desired signal's level, and would be rejected due to the capture effect. Intermodulation products (not including, of course, crossmodulation) depend on the levels of two or more undesired signals, and may exceed the desired signal's level. However, because of the capture effect, the intermodulation products do not cause crosstalk or interference until they are within a few db of the desired signal. With AM recievers, the intermodulation products must be kept at least 60 db below the received signal for negligible crosstalk.

The second significant advantage of FM is the ability to increase received audio S/N by increasing the occupied channel bandwidth. Since the fibre is a dedicated medium, and since the present configuration provides at least 30 MHz of useable RF frequency spectrum, the occupied channel bandwidth could be greatly increased even if the system was expanded to several hundred stations. It can be shown that the improvement G, in db, of the S/N ratio obtained by using an FM system, with a bandwidth approximately Y times larger than the equivalent AM bandwidth, is given by: $G = 10 \log(4.5\, Y^2)$. The AM bandwidth of the system was 6.6 KHz. By using a 100 KHz bandwidth, the FM system S/N improvement, over a 100% AM modulated system, would be 30 db. The improvement over the present (33% AM modulated) would be 40 db, yielding a minimum 50 db S/N at maximum sensitivity, which is excellent for a voice channel.

(ii) Tone Signalling

Signalling (transmitting the number of the called party to the Central Processor) with dial pulses worked well in the present system configuration. However, it is outdated, and would be difficult to implement for a 100 station system. Furthermore, it would be impractical to use with an FM system. Tone signalling, especially DTMF (Dual Tone Multi-Frequency) is a far superior signalling system, and offers much grester noise immunity and expansion capability. The detection circuitry is, of course, more elaborate, but most of the required circuitry is available in integrated circuit (I.C.) form.

III OPTICAL SYSTEM

As the system is presently configured, the station transmitter, receiver, and 2 to 1 fibre-optic coupler are permanently joined together by short lengths of fibre. This makes mechanical and electrical repair or troubleshooting extremely difficult. The installation of fibre jacks at the transmitter and receiver would solve this problem, while increasing the path loss by 2 db at the very most. Fibre jacks for the C.P. LED Driver and Photodiode Stage, although less critical because of greater space in the C.P. chassis, would also be very beneficial.

The optical design of this system is described and discussed in the report by Gary Duck. However, one point should be

mentioned here regarding tapping ratios. If this system were to be expanded into a 100 station trunk system (which is similar to a two-way CATV system), the practical and theoretical feasability of various tapping ratio combinations should be investigated.

As an example, if 3 db couplers (as used in the present system) were used, the signal received by the last station on the trunk would be 300 db below the C.P. output level, and similarly, since the loss through the directional couplers (taps) is symmetric, the signal from that last station would be attenuated by 300 db by the time it reached the Central Processor. However, if the tapping ratio was 1/100 = -20 db, the signal received by the first station would be -20 db below the C.P. output. Since the 'through loss' of each tap is only (1-1/100) = .044 db, the signal received by the last station would be -20-(100 x .044) = -24.4 db below the C.P. level. The same figures apply for transmission from the station to the C.P.

IV ELECTRICAL CIRCUITRY

Although the system operated satisfactorily, several improvements could be made in the existing circuitry. The first involves the secondary AGC circuit of the receivers, which was found to be sensitive to power supply variations. This problem can be eliminated by modifying the circuit as shown in Fig. 13. R16, instead of being connected to ground, is routed to the junction of CR99 and R99. The voltage at that junction will be 5.6 V below the power supply, and therefore the bias voltage at Q2 will be fixed with respect to

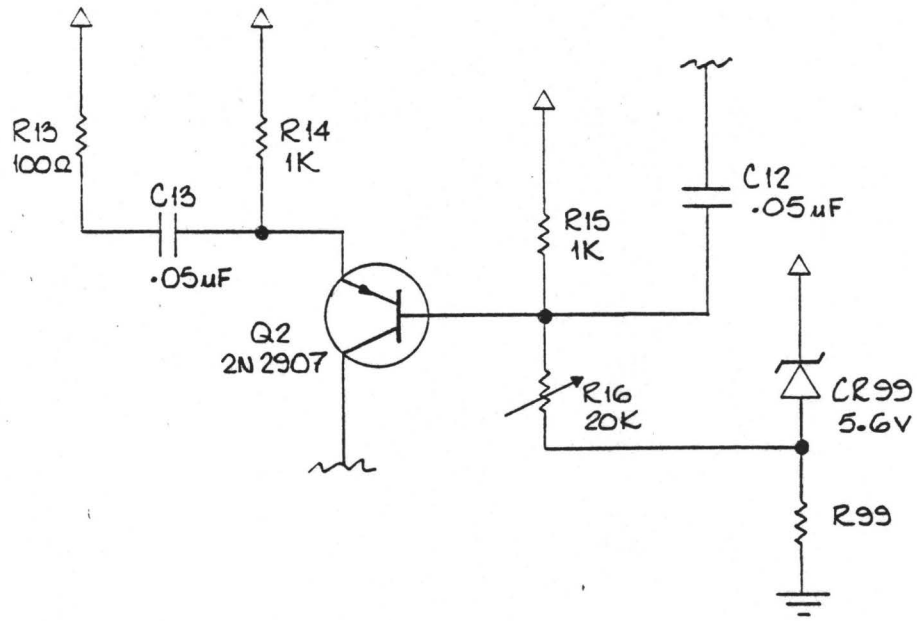

FIGURE 13.

SECONDARY AGC DETECTOR WITH STABILIZER CIRCUITRY.

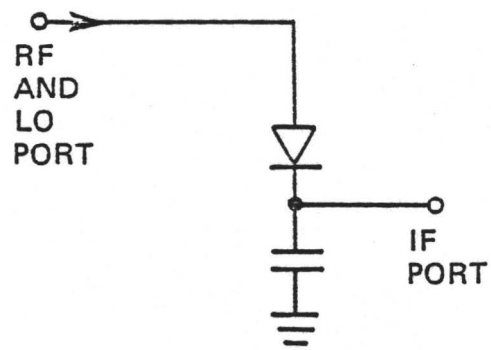

SINGLE-ENDED MIXER

FIGURE 14 (After p. 11, Ref. 1)

the power supply, and independent of any power supply variations.

Another modification to the existing circuitry involves the design and installation of circuitry to stabilize the RF output levels of the station transmitter LED drivers, and the C.P. mixer and LED driver unit. This involves lengthy experimentation and design, which will not be discussed here.

Should a major redesign of the system be undertaken, several improvements should be contemplated. The first is the use of RF hybrid modules, wherever possible, to replace existing Rf amplifiers. These modules are complete amplifiers containing all the required inductors and capacitors. They have a 50 ohm input and output, and excellent characteristics, but are relatively expensive. If the system is to be converted to FM, serious consideration should be given to the use of modules from state-of-the-art portable two-way FM radios. The circuits in these radios, such as the Motorola MX300 series, are completely contained in a dozen or so modules, each performing a specific task (ex. IF stage, limiter, audio amplifier, etc.). These modules are undoubtedly also relatively expensive.

It would be very advantageous to replace the converter by a separate mixer, and to separate the IF stages from the rest of the receiver circuitry. The mixer and IF stages should be installed in a separate, shielded area of the receiver, in order to enhance selectivity. The converter used in the existing circuitry is bas basically a single-ended mixer, as shown in Fig. 14. It provides

no RF/Local Oscillator isolation, and since it has an exponential characteristic, it will generate intermodulation and crossmodulation products at the IF port which may cause crosstalk and interference.

The double balanced mixer shown in Fig. 15 has excellent RF/local oscillator isolations, and since it operates as a square low device (a switching type mixer), it theoretically does not generate undesired intermodulation or cross modulation products. The double balanced mixer is superior in performance to the balanced mixer shown in Fig. 16. However, if two balanced mixers are combined as shown in Fig. 17, they form an image rejection mixer. This type of mixer has excellent RF/local oscillator isolation, but does produce some intermodulation and crssmodulation. It's main advantage is the image rejection it provides, which eliminates the need for very high Q filters in the RF stages of the receiver. If possible, the ideal situation would be to construct an image rejection mixer using double balanced mixers, which would eliminate the undesired intermodulation and crossmodulation products.

The noise level from the transimpedance amplifier is 30 db above the 50 ohm thermal noise level. This being the case, it may not be necessary to have an RF amplifier between the transimpedance amplifier and the mixer (since any useable signal would be (30+S/N)db above the 50 ohm thermal noise level). Instead, RF AGC action could be performed by one or more PIN attenuator diodes. The equivalent circuits for a PIN diodes are shown in Fig. 18. The main characteristic of these diodes is that when forward biased, although they

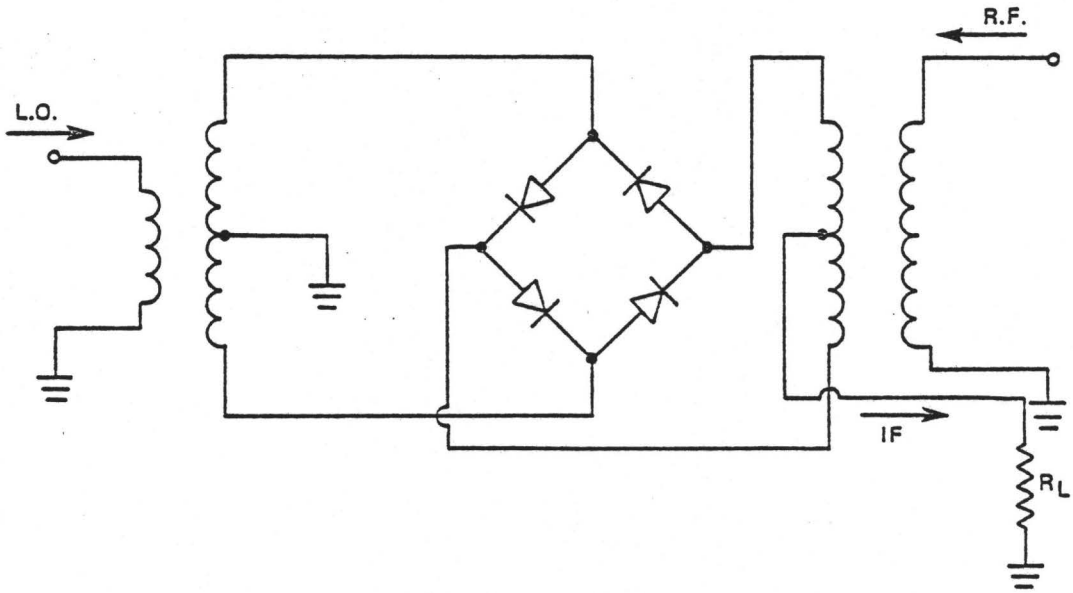

DOUBLE BALANCED MIXER

FIGURE 15 (After p. 13, Ref. 1)

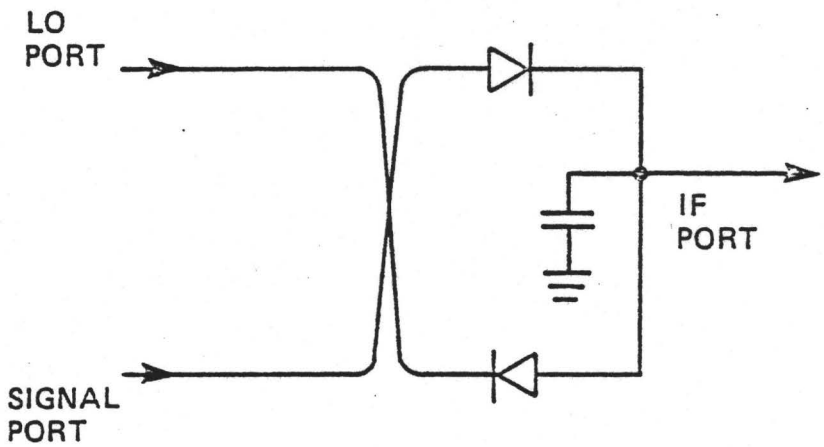

BALANCED MIXER

FIGURE 16 (After p. 11, Ref. 1)

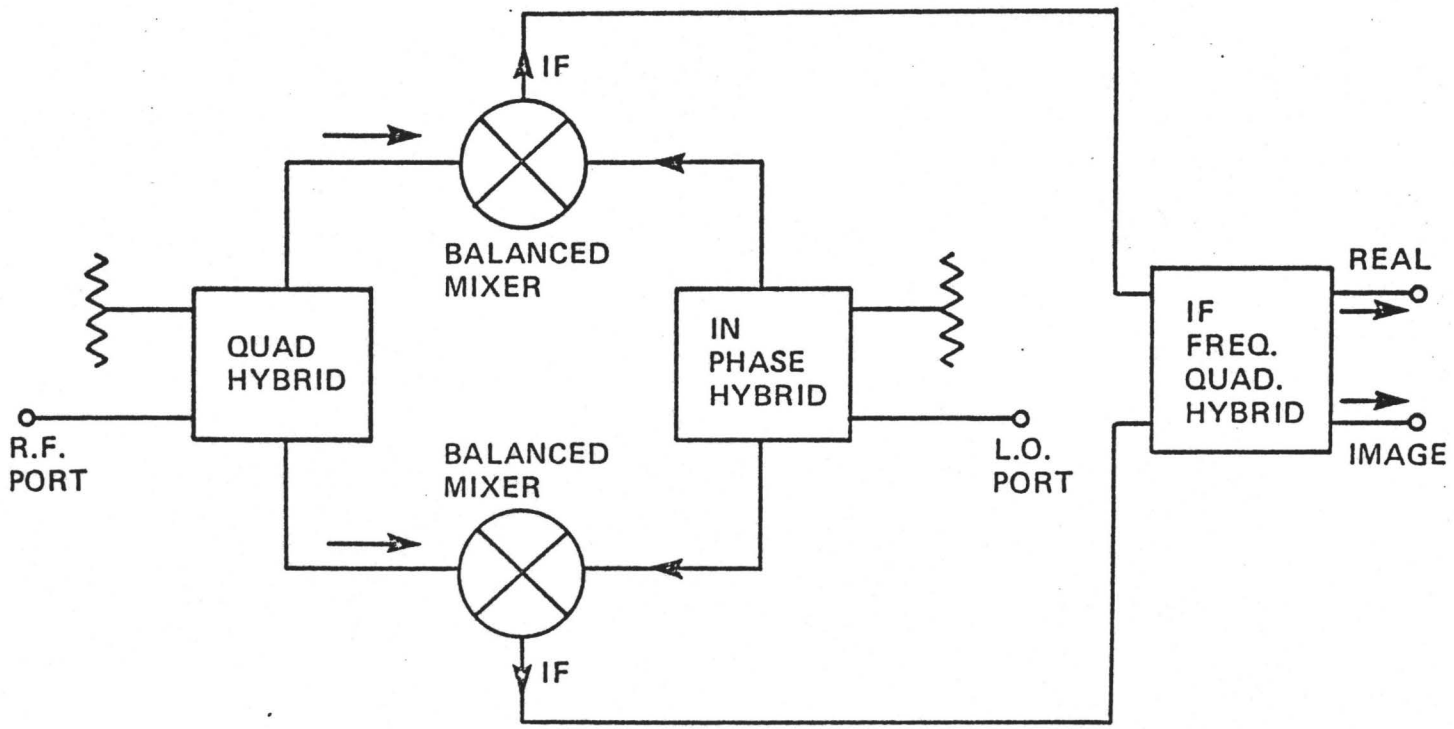

IMAGE REJECTION MIXER

PROPERTIES – SAME AS BALANCED MIXER
IMAGE REJECTION – RATIO OF THE IMAGE SIGNAL TO THE REAL SIGNAL AT THE REAL IF PORT

FIGURE 17 (After p. 14, Ref. 1)

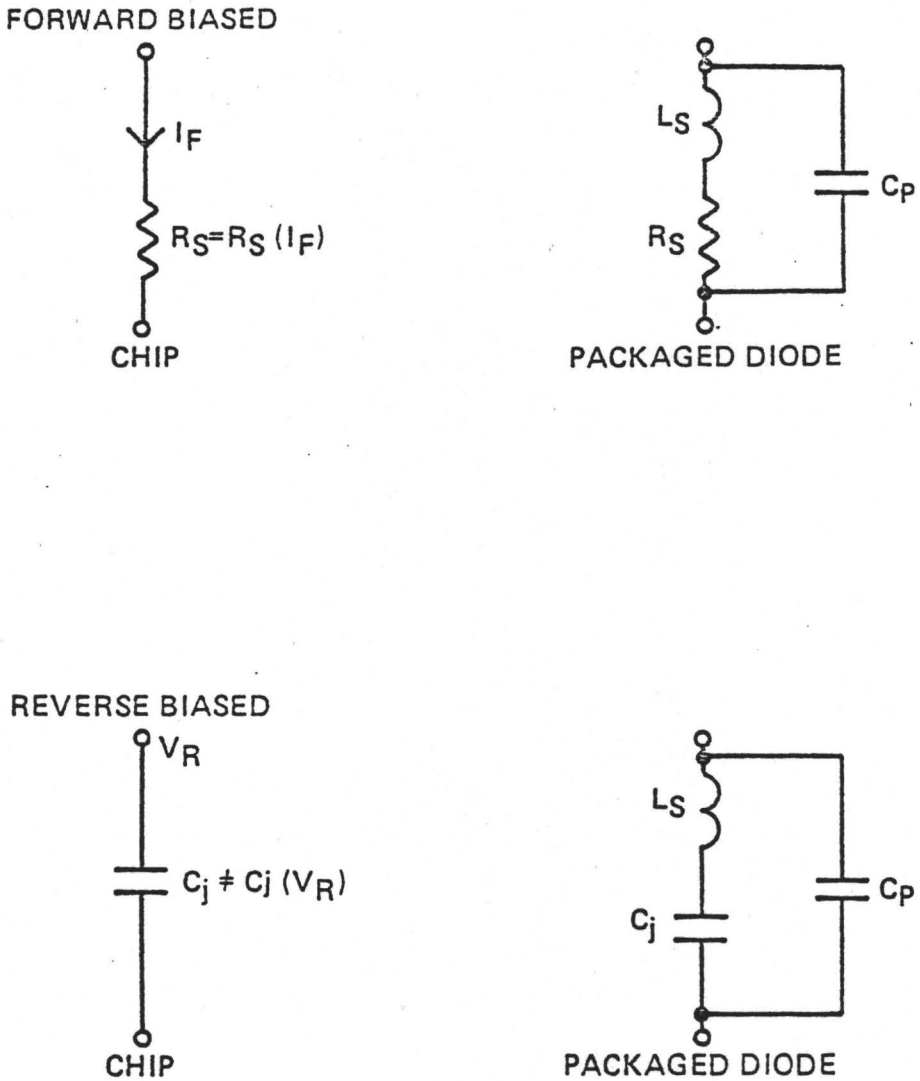

EQUIVALENT CIRCUITS FOR PIN DIODES

FIGURE 18 (After p. 88, Ref. 1)

exhibit diode characteristics for D.C. and low frequency signals, they appear as very linear resistances to RF signals. This RF resistance is proportional to the D.C. forward bias current, and is completely independent of the RF current. This characteristic is a result of the transit time for signals through the intrinsic region of the diode. When reversed biased, the PIN diode is effectively a small capacitance. These diodes have a very wide dynamic range, and produce far less intermodulation and crossmodulation than most transistors.

V COMPONENTS

Electrical and mechanical reliability could be enhanced by the following modifications or additions.

EMI (Electromagnetic Interference) filters are currently available which have the same size and shape as standard feed-thru capacitors. These filters consist of 5 pole, section, low pass RF filters, and will attenuate 30 MHz RF signals by more than 60 db. Their use would be very beneficial at the power, audio, and signal input/output ports of all the transmitters and receivers. Their compact size would greatly reduce the required dimensions of the C.P. isolator units.

The dielectric foil trimmer capacitors used intthe existing circuitry should be replaced by ceramic trimmer capacitors, which have a higher Q, and better mechanical characteristics. Also, wherever possible, RF trimmer capacitor should be of the type in

which one terminal of the capacitor is connected to a shield surrounding the capacitor. This shield, and the adjusting screw are both grounded. This prevents stray capacitative pickup, and allows the use of metal screwdrivers for adjustment. Furthermore, these capacitors can be mounted in the walls of the receiver or transmitter enclosures, eliminating the need for access holes for trimmer adjustment.

The desk sets used for the stations should be replaced by custom designed enclosures, which would permit using standard shaped transmitter and receiver enclosures, and would also provide room for the station power supplies (batteries). Finally, more attention should be paid to a more organized, and a more mechanically and electrically sound cabling scheme in the Central Processor.

VI TRANSMITTER LINEARIZATION

The MC1590G AM Modulator and Amplifier (IC1) in each transmitter was biased for maximum possible linearity, as were the intermediate RF amplifier and the LED Driver. However, it is doubtful that the linearity of these stages actually satisfied the spurious emissions specification described in Chapter 2. Furthermore, it is doubtful that the LED itself was sufficiently linear to satisfy that specification. To satisfy the spurious emission requirement (if it is found that it has not been satisfied), two linearization schemes, both using feedback, should be examined.

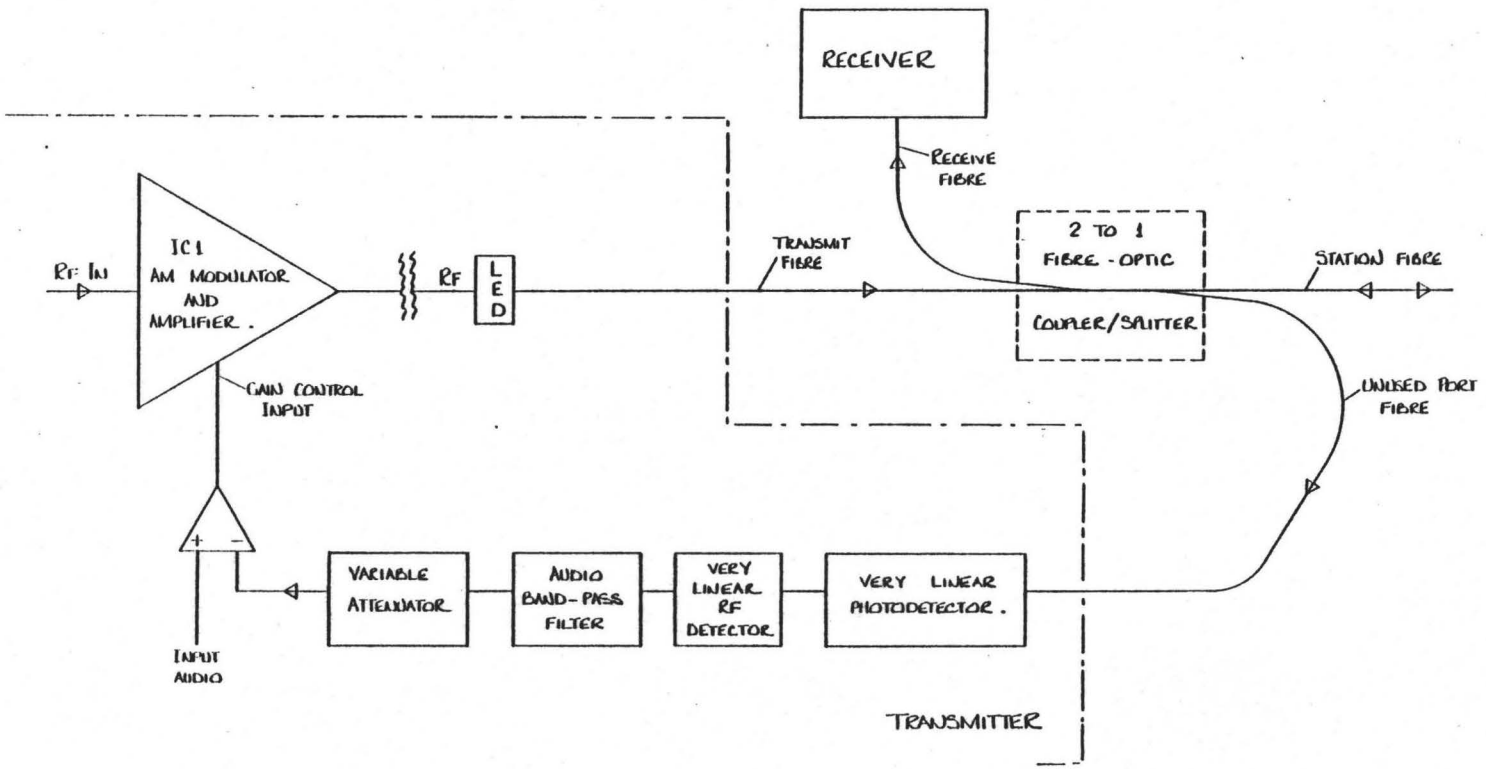

FIGURE 19 TRANSMITTER LINEARIZATION BY OPTICAL FEEDBACK.

The first, although far more elaborate, is more reliable because it compensates for both electrical and optical (LED) nonlinearities. This scheme is shown in Fig. 19. The modulated light from the transmitter is routed by the fibre to the 2 to 1 coupler. The transmit light is coupled into both the station fibre and the fourth (unused port) fibre. In this feedback scheme, this fibre is routed back into the transmitter, and its' optical output is applied to an extremely linear photodetector circuit. The voltage from the photodetector is then rectified, filtered, attenuated (or amplified), and applied to a transmit audio differential amplifier. The output of this amplifier is whatever signal is required to make the voltage at the negative terminal (representing the actual modulated light output) exactly match the input transmit audio at the positive terminal.

A similar, but less elaborate scheme is shown in Fig. 20. Its' operation is virtually identical to that of the previous unit, except that the feedback voltage is obtained from the LED driver output. This scheme does not compensate for LED non-linearities.

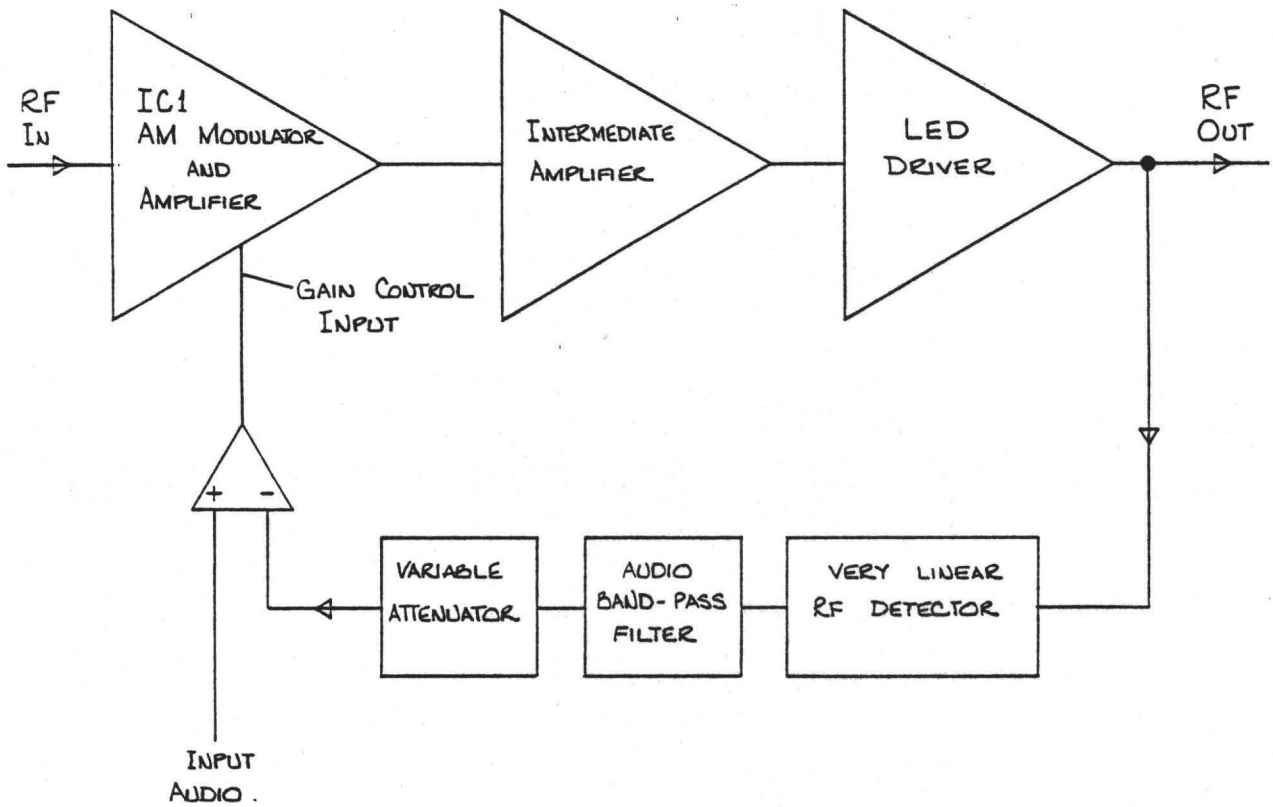

FIGURE 20.

TRANSMITTER LINEARIZATION BY RECTIFIED RF FEEDBACK.

CHAPTER 6

CONCLUSIONS

This project report analyzed the operation, theory, and parameters of the system described in the report entitled 'An Optical Fibre Telephone System (Analog Electronics)'. The parameter specifications necessary to fulfill the system objectives, described in the Introduction, were tabled, and their derivations were discussed. A preliminary evaluation of the system, and the solution of some initial problems with the logic circuitry was described. It was demonstrated that the measurements made in the preliminary analysis corresponded reasonably well to the theoretical calculations. The design theory involved in the crucial photodiode and transimpedance amplifier stage was examined in greater detail. Finally, various improvements and areas requiring further research were outlined and discussed.

The results of the preliminary evaluation would indicate that the final system satisfied the parameters listed in Chapter 2. However, only an exhaustive experimental analysis can establish whether or not these parameters were actually met.

Although possible, after some necessary circuit modifications and additions, it is not recommended that the system be expanded in its' present configuration. Changes which should be made to the system prior to expansion are outlined in Chapter 5. However, these changes relate to improvements in the design and

implementation of radio (and analog) subsystems and circuits. The feasibility and implementation of a frequency multiplexed, RF subcarrier, telephone communication system, over a fibre-optic trunking system, has been very effectively demonstrated.

APPENDIX A

Logic Circuitry Modifications

The erratic switching and dial pulse miscounting observed in the preliminary evaluation in Chapter 3, was caused by the following two problems in the Central Processor Logic Circuitry. For a detailed description of the normal operation of this circuitry, refer to the report by John Goodwin (Ref. 2).

In the Dial Pulse Detecting Circuit, shown in Fig. A1, the inputs of the 339 comparator must not be allowed to go more than 0.5 V below ground level. Otherwise erratic operation results in that comparator, and also the other comparators on the I.C. However, the ouptut of the shaping network is receiver audio (A.C.) with a 0 V D.C. level. Therefore, large negative peaks in the receive audio caused the (-) input to go below -0.5 V D.C. Since the pulses to be counted are all positive, the solution to this problem was to clamp that input to ground (for negative voltages). This was done by installing a germanium diode between the (-) input and ground (anode to ground). Also, a 50 K series resistor was installed between the shaping network and the (-) input. This resistor prevents distortion of the receiver audio by the diode.

The second problem was with the circuit shown in Fig. A2. This circuit detects when the signal strength output from the receiver exceeds a certain reference voltage. To obtain reliable operation,

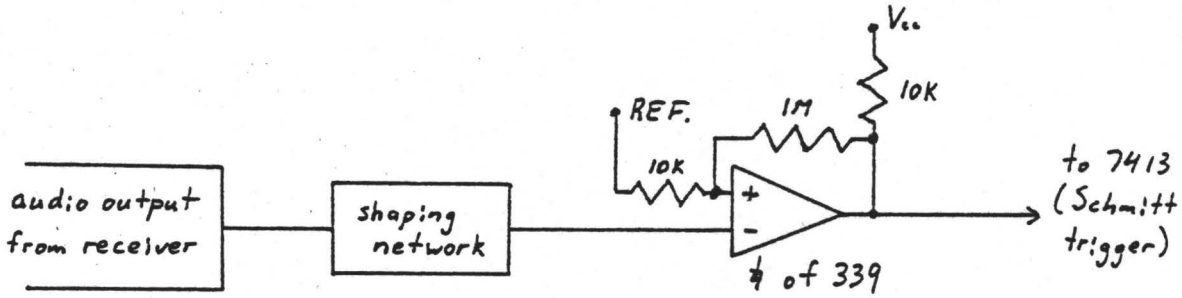

Fig. A1 Dial Pulse Detecting Circuit
(After p. 19, Ref. 2)

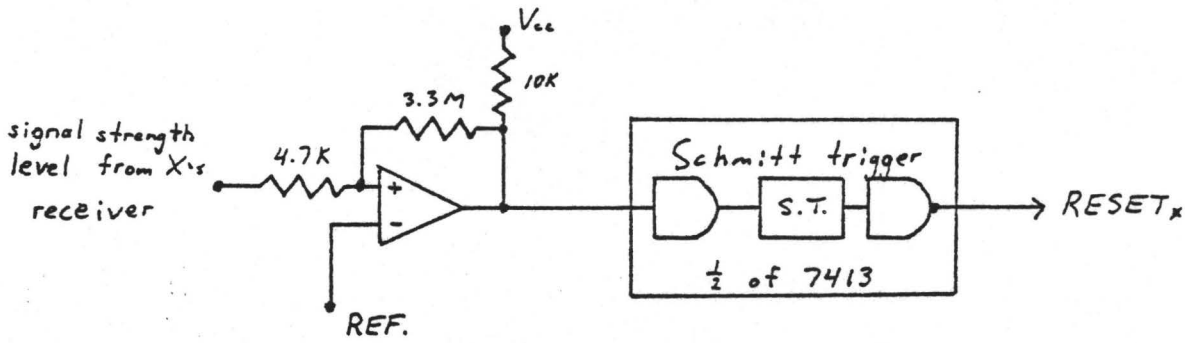

Fig. A2 Generation of RESET Signal
(After p. 21, Ref. 2)

this reference voltage was the midpoint of the signal strength output range. When the signal strength output exceeds that threshold, the counting circuits are immediately activated. However, when the signal strength output is at the threshold point (as it is rising to its' peak value), the receiver gain has not yet stabilized, and the receiver audio contains high level noise. This noise is sufficient to trigger the counting circuits, causing a miscount. The solution to this problem is to delay the signal strength voltage reaching the detection circuit by an interval greater than the typical 'rise-time' of the receiver (approximately 0.25 sec.). The 4.7 K resistor connected to the (+) input of the amplifier is replaced by a 2 K and a 2.7 K resistor connected in series. Between ground and the junction of these resistors is a 250 uF capacitor, which causes a 0.5 sec. delay in the signal reaching the amplifier.

APPENDIX B

Sidetone and Auxiliary Gating Unit

The problems with the ring signal, noise during ringing, and the sidetone, discussed in Chapter 3, were caused by the following problem. Refer to the "Double Switch Connection' circuit in Fig. B1. Note that the transmitter input impedance is very high (greater than 100K) and the receiver output impedance is very low (less than 10 ohms). Now, when the two switches are open (during dial tone, dialing, and busy sequences), the sidetone level at trasmitter A is equal to Z_T / (R_{SA} + Z_{TA}) x (Receiver A audio level), where Z_{TA} is the input impedance of transmitter A. However, when the switches are closed during a converstaion, the input impedance of transmitter A is loaded by the output impedance of receiver B (Z_{RA}). The sidetone level at transmitter A is now ($Z_{TA}//Z_{RB}$) / (R_{SA} + $Z_{TA}//Z_{RB}$) x (Receiver A audio level), which is far lower than when the switches were open.

When A is calling B, as soon as the pulses are counted, the two switches are closed, and a medium output impedance ring tone generator is connected to transmitter A. This generator was designed to drive the high impedance input of the transmitter. However, because the switches are closed, the input of transmitter A is loaded by receiver B, and the ring tone is barely audible. Furthermore, during the ringing interval, station B has not yet started to transmit, and so the audio from receiver B contains only high level noise, which is transmitted to station A. The solution to this latter problem is

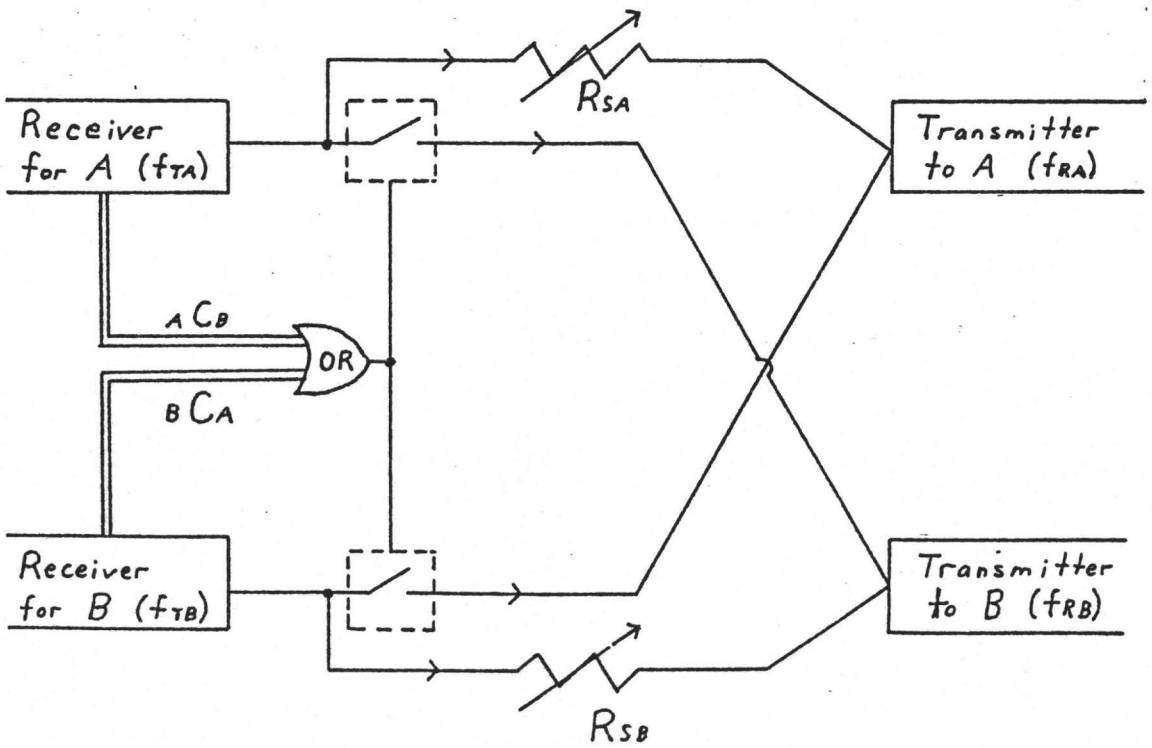

Fig. B1 Double Switch Connection
(After p. 13, Ref. 2)

to block receiver audio until a subcarrier is detected (via the signal strength detection circuit). The loading problem can be solved by inserting a series resistance in every cross connection (i.e. connection from receiver A to transmitter B, etc.). However, a better and simpler solution was to remove the sidetone resistors (R_{SA}, R_{SB}, etc.), and install them, the required cross connection series resistances, and the necessary receive audio gating circuits, on a separate board external to the logic circuitry. This is the Sidetone and Auxiliary Gating Unit shown in Fig. B2.

For each channel, transmit and receive audio are applied to opposite ends of a potentiometer (R16, 17, 18). The wiper is connected to the transmitter input. Sidetone level is adjusted by adjusting the pot, and the combined audio level (Tx. Audio + Sidetone Audio) into the transmitter remains constant. The 10 K resistance of the pot prevents the receiver from loading the transmitter input.

The required gating is provided by FET's Q1, Q3, and Q5, which are turned on whenever the corresponding driver transistors (Q2, Q4, Q6) are on. The driver transistors are turned on by the outputs of the signal strength comparator amplifiers, shown in Fig. A2 in Appendix A. Consider channel A. When Q2 is off, the gate of Q1 is driven high by R5, and Q1 is off, blocking receive audio. When Q2 is on, the gate of Q1 is driven low by R2, and Q1 is on, allowing receive audio to pass.

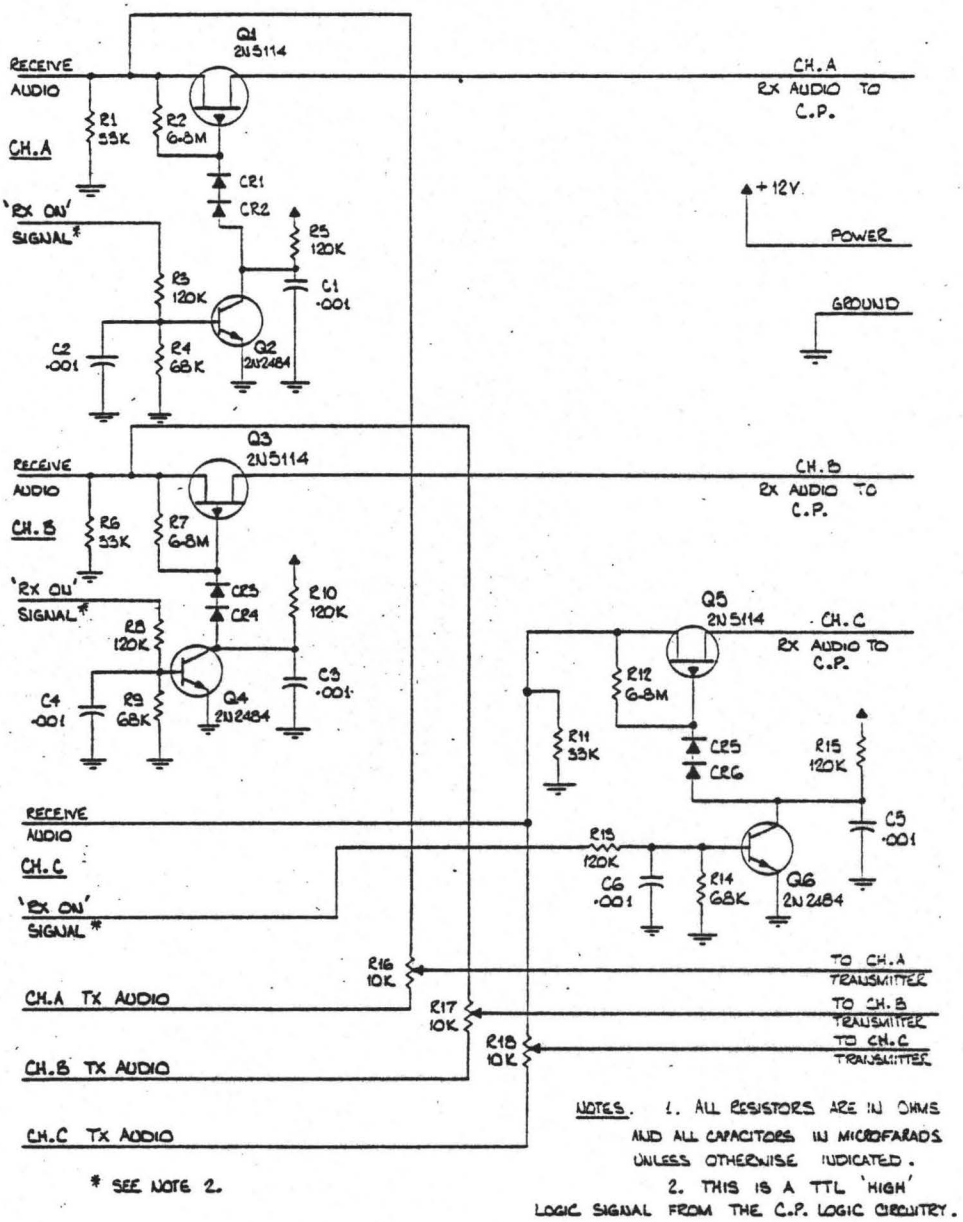

FIGURE B2 SIDETONE AND AUXILIARY GATING UNIT.

APPENDIX C

Buzzer Drive Modifications

The problems with the buzzer tone in the stations, discussed in Chapter 3, were caused by the following circuitry problems. For a detailed description of the buzzer drive circuit operation, refer to Appendix A of the report by John Goodwin (Ref. 2).

The buzzer drive circuitry is shown in Fig. C1(a) and Fig. C1(b). When the receiver is not receiving, the output of the 339 comparator in Fig. C1(a) is low. Therefore, the (+) input of the 339 drive circuit comparator in C1(b) is also low. If the output of the drive circuit comparator remains low under these conditions, the buzzer will not sound. This is proper operation. However, this assumes that the (-) input of the drive circuit comparator is at a slightly higher level than the (+) input. This is not necessarily the case (especially when there are stray fields present), and if the (-) input drops below the (+) input, the buzzer wil sound. To prevent this, a 10 M resistor was connected between the power supply and the (-) input. This doesn't affect operation when the receiver is receiving,and it ensures that the (+) input goes below the (-) input when the output of the comparator in Fig. C1(a) is low.

Power is applied to the buzzer drive circuitry only when the handset is on the cradle. The buzzer sounds whenever the handset is on the cradle, and the receiver is receiving a signal. The problem is that when the station is 'hung up', the receiver continues to get a

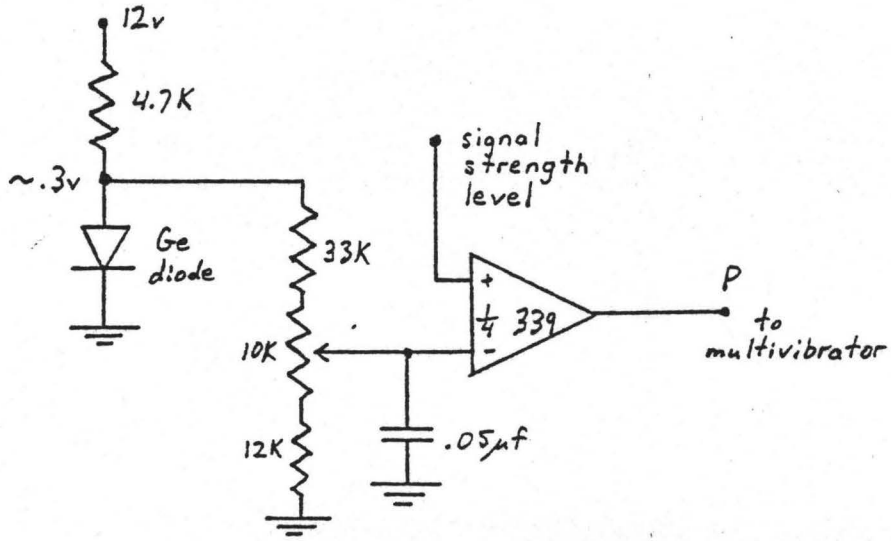

Fig. C1a Signal Strength Comparator

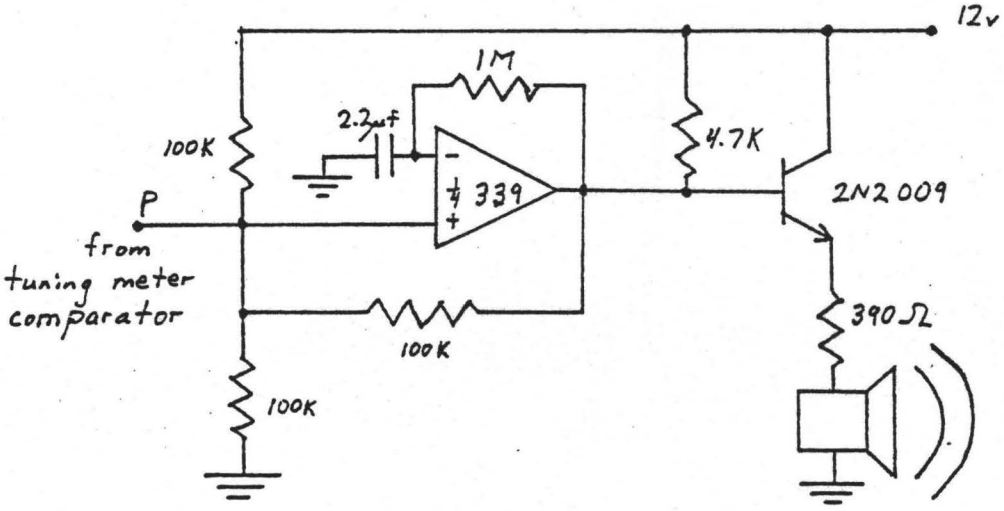

Fig. C1b Buzzer Drive Circuit

signal from the Central Processor for a short period of time(less than one second). This causes a short burst of buzzer tone every time the handset is placed on the cradle (i.e. the station is 'hung up'). The solution to this problem is to connect the 2.2 uF capacitor shown in Fig. C1(b) between the (-) input and the power supply (rather than ground). Thus, when the handset is placed on the cradle and power is applied to the buzzer circuitry, the capacitor must charge to at least 2/3 of the supply voltage before the drive circuit comparator output can go high. The time required for this charging is sufficient to prevent the short buzzer burst.

REFERENCES AND BIBLIOGRAPHY

1) Microwave Associates, "Microwave Semiconductors for Mobile Communications"

2) John Goodwin, "An Optical Fibre Telephone System (Central Switching and Logic"

3) Simon Haykin, "Signal Processing and Modulation Systems", McMaster University, 1976.

4) John P. Marton, "Optical Communications", Lecture Notes, McMaster University, 1975.

5) RCA Linear Integrated Circuit Data Book

6) Frederick Terman, "Radio Engineers' Handbook, McGraw-Hill,1943

7) Millman and Halkias, "Integrated Electronics", McGraw-Hill, 1972.

8) Donald Fink, "Electronic Engineers' Handbood", McGraw-Hill, 1975.

9) Michael Barnoski, "Fundamentals of Optical Fibre Communications", Academic Press, 1976.