NEW DESIGN OF HOT STRIP MILL RUNOUT TABLE

NEW DESIGN OF HOT STRIP MILL RUNOUT TABLE

By

MIROSLAV KRATKY, Dipl. Ing.

A thesis

Submitted to the School of Graduate Studies

in Partial Fulfilment of the Requirements

for the Degree

Master of Engineering

McMaster University

March 1972

MASTER OF ENGINEERING (1972) McMASTER UNIVERSITY

(Mechanical Engineering) Hamilton,Ontario

TITLE: New Design of Hot Strip Mill Runout Table

Author: Miroslav Kratky,Dipl.Ing.

Supervisor: Professor J.N.Siddall

Number of pages: i-xi;L-117

SCOPE AND CONTENTS

Reduction of high capital and operating costs of the existing hot strip mill runout tables is the main objective of this thesis. This is accomplished through the introduction of a new principle for conveying and cooling hot strip.

SUMMARY

The work presented herein describes the production of hot strip with special attention to the runout table. Because of its high capital and operating costs, a new principle in conveying the strip using an air cushion and a new cooling system for strip cooling have been proposed.

Information given here is nearly all from available literature and the author's own experience with Hot Strip Mill production problems.

To support the idea of using an air cushion for strip conveying, experimental equipment was designed and built which confirmed the feasibility of the method.

A new cooling system was also proposed to meet the ever increasing requirements for better mechanical properties of hot strip.

Runout table design application may serve as a guideline in designing new Hot Strip Mill runout table.

ACKNOWLEDGEMENTS

It is difficult to account for all of the influences which have helped me in this work.

Particular thanks is due to Professor J.N. Siddall of the Mechanical Engineering Department of McMaster University, who provided many suggestions and criticisms and read the manuscript. Without his help in building the model and his patience in the last phases of my work, the completion of the task would have been much more difficult.

Thanks are also due to my supervisor, S.W. Wood and Mr. J. Lawler, Superintendent of Industrial Engineering Department, Steel Company of Canada, for the encouragement and effort to use the ideas in the industry.

Finally, Mr. B.G. Stewart's experience and knowledge of Hot Strip Mill operation have helped me avoid many mistakes in assumptions for industrial applications. He challenged me on expression and grammar at every turn of the page.

TABLE OF CONTENTS

LIST OF FIGURES

NOMENCLATURE

Symbol	Description	Units
Po	Atmospheric Pressure	lb/ft^2
Pc	Cushion Pressure	lb/ft^2
H	Gap between Strip and Table Surface	in
S	Density of Air	$lbf/sec^2/ft^4$
V	Velocity of Air at Nozzle	ft/sec
Vm	Mean Velocity of Air in Curtain	ft/sec
Vx	Velocity of Air Escaping from Cushion	ft/sec
δo	Nozzle Angle	Radians
δ	Jet Angle	Radians
t	Nozzle Width	in
A	Area	in^2, ft^2
At	Flow Area at Nozzle	in^2
Dh	Hydraulic Diameter	ft
F	Force	lbf
Q	Volumetric Flow Rate	GPM
g	Acceleration Due to Gravity	ft/sec^2
gc	Conversion Factor Relating Absolute Mass Units (Slugs) to the More Commonly Used Weight Units (lbm)	$ft\text{-}lbm/sec^2$
hf	Fluid Static Pressure Head	in
L	Length	ft
m	Mass	$lbf\text{-}sec^2/ft$
mf	Mass Flow Rate, $mf = \frac{w}{gc}$	$lbf\text{-}sec^2/ft$
Re	Reynolds number	-

Symbol	Description	Units
Rh	Hydraulic Radius	ft
SCFM	Flow Rate in Standard Cubic Feet Per Minute	ft^3/min
T	Time (Temperature)	sec (°F)
μ	Coefficient of Absolute Viscosity	$lbf\text{-}sec/ft^2$
Vr	Roller Table Speed	ft/min
α	Acceleration Due to Force	ft/sec^2
f_n	Neck Coefficient of Friction	-
f	Sliding Friction Coefficient	-
dr	Roller Neck Diameter	in
n	Roller Revolutions	rpm
w	Strip Width	in
S	Roller Spacing	in
G	Strip Gauge	in
ρs	Specific Weight of Hot Rolled Steel = 0.283	lb/in^3
fe	Coefficient of Friction (No Sliding Between Roller and Strip)	-
I	Inevtia Moment of the Roller $= \frac{Mr\ Dr^2}{2}$	$lbf\text{-}sec^2\text{-}ft$
Ek	Kinetic Energy	lbf-ft
Lr	Length of the Roller Table Lr = 450' - 0"	ft
N	Motor Output	HP
	Efficiency	-
E	Emissivity Coefficient of Steel Strip = 0.8	-
Gb	Stefan-Boltzman Constant	

Symbol	Description	Units
C	Specific Heat of Steel = .209	BTU/lb °F
P_1	Air Pressure in the Chamber	lb/ft^2
t	Jet Thickness	in
P_T	Total Pressure Rise Across Fan	lb/ft^2
HP	Horsepower	Hp
T_F	Finishing Strip Temperature	°F
Tc	Strip Cooling Temperature	°F
K	Thermal Diffusivity of Steel	ft^2/sec
k	Thermal Conductivity of Steel	BTU/sec-ft-°F
w	Water Quantity	gal/min

INTRODUCTION

In the past 30 years the consumption of flat rolled steel has increased by more than 300 percent, while total hot rolled products over only about 225 percent. Since 1960, ten new Hot Strip Mills have gone into operation in the United States only and more are under construction.

The present going cost of a complete new Hot Strip Mill with sophisticated control has reached $150,000,000. It is therefore very important to look for new methods of strip production and handling which may bring the capital investment considerably down and make the hot strip prices more competitive on international markets.

It depends on engineering ability to introduce and adopt new principles for the existing industrial utilization.

2.1 Classification

The products of the hot strip mill are classed flat rolled steel products. Flat rolled steel products may be distinguished from other forms of rolled steel in two general ways. First, flat rolled steel is produced on rolls with smooth faces in contrast with the cut or grooved roll faces employed in the manufacture of shapes and, second, in flat rolled products the ratio of width to thickness is generally high as distinguished from other rolled products. The ranges of dimensions are wide, varying in thickness from 0.005 inch in light strip to 15 inches in heavy plates, and in width from 3/16 inch in narrow strip to 200 inches in wide plates.

By common custom, finished flat hot rolled carbon steel strip is produced in the following dimensional ranges.

Width (In.)	Thickness (In.)
20	0.05
96	1.25

2.2 Historical Development

The mills used for rolling flat rolled steel products include the following, named in the order of their development:

a) the two-high mill,
b) the Universal mill,
c) the three-high mill or Lauth mill,
d) the continuous or tandem hot strip mill,
e) the cold reduction mill.

The method for rolling sheets on two-high, single stand mills originated between 1720 and 1728. Up to about 1890 the finished flat-rolled steel products could be classed as sheets, plates, and bars. The bar mills also rolled thinner sections and about this time there developed such a demand for very thin flats that special mills were built to supply the material. The differentiation first took place in the narrower widths, ranging from 5/8 inch to 3 inches and from 0.065 to 0.028 inch in thickness.

In 1926, at Butler, Pennsylvania, the first mill was built to combine successfully the use of the following principles:

a) four-high finishing stands
b) control of the direction of travel of steel through the pass line of the tandem finishing mills by progressively decreasing the product crown in successive mill passes.
c) hot coiling equipment at the discharge end of the unit.

This installation was the first of the modern wide continuous mills as known today.

2.3 Types of Steel for Strips

Chemical Composition

Steel compositions used for the manufacture of thin, flat steel products range from so called "pure iron" in which the sum of all elements other than iron in the product is less than one-third of one percent of the total weight, to the high alloy stainless and heat resisting steels composed of as much as 50 percent alloying additions. About four fifths of the strip rolled, however, is made from steel compositions within the following ranges.

Element	Percent
Carbon	0.03 to 0.12
Manganese	0.20 to 0.60
Phosphorus	0.04 maximum
Other Elements	Low as possible

This general range of compositions provides the best combination of rollability during manufacture and formability in most of the applications for which these products are used. Such compositions, too, are well suited for the production of rimmed steel, which is preferred for flat products because of the superiority of its ingot surface. Deviations from this basic composition range are deliberately employed to obtain specific desired properties in the steel.

Sulphur, silicon, copper, nickel and chromium generally are considered as the "other elements" of the basic composition given above. Except in the steels where they are added deliberately to produce alloy steels with definite properties, these elements offer no advantages and, when present in greater than certain amounts, may even be detrimental to the rolling or fabricating properties of steel. An effort is made to keep sulphur and chromium contents each below 0.05 percent, and copper and nickel contents below 0.15 percent.

Silicon content naturally falls under 0.002 percent in the rimmed and capped steels popularly used for sheets, strip and tin plate.

Slabs are the raw material for the modern continuous hot strip mill. A slab is defined as a rectangular steel section having a minimum thickness of 2 inches and minimum width not less than twice the thickness. Slabs are generally provided in thickness of 6 inches to 10 inches, widths of 18 to 76 inches and lengths 168 to 389 inches, depending on strip mill requirements. They must be accurate enough in dimensions and sound enough in structure to permit conversion in subsequent rolling operations with a minimum of difficulty, and their edges and surfaces must be free of injurious

defects which would carry through to the finished product.

2.4 Continuous Hot Strip Mills

a) General Arrangement of Modern Mills

The modern wide hot strip mill has become quite standardized in its general layout. Slabs are heated in two or more continuous reheating furnaces. A typical rolling train will consist of a roughing scalebreaker, four four-high roughing stands, a finishing scalebreaker, and six four-high finishing stands.

Driven table rolls convey the slab from furnace to mill and also from stand to stand. The first component is usually a vertical scalebreaker followed by a horizontal scalebreaker. The next is reversing rougher and two continuous roughers. The holding table separates the roughing train from the finishing train composed of the finishing scalebreaker and six finishing stands. Following the last finishing stand there is usually a flying shear for cutting the rolled products into length. It is carried over a long table called the run-out table consisting of individually driven rollers. Two or more coilers are located in this table. They operate to coil the material when continuous long lengths are required.

Figures 1, 2, 3 and 4 shows general arrangements of recently built Hot Strip Mills.

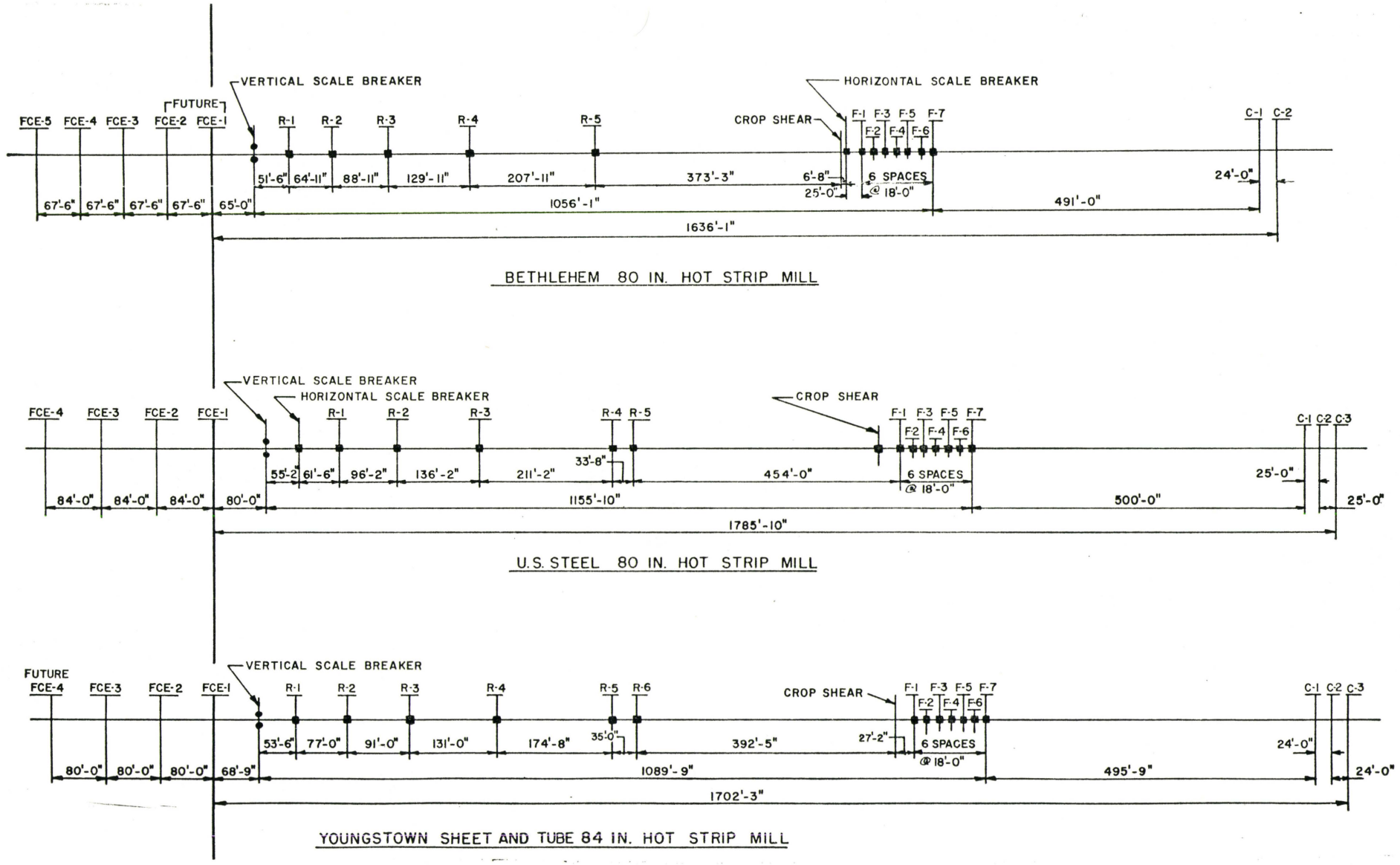

FIG. 1 HOT STRIP MILL ARRANGEMENTS

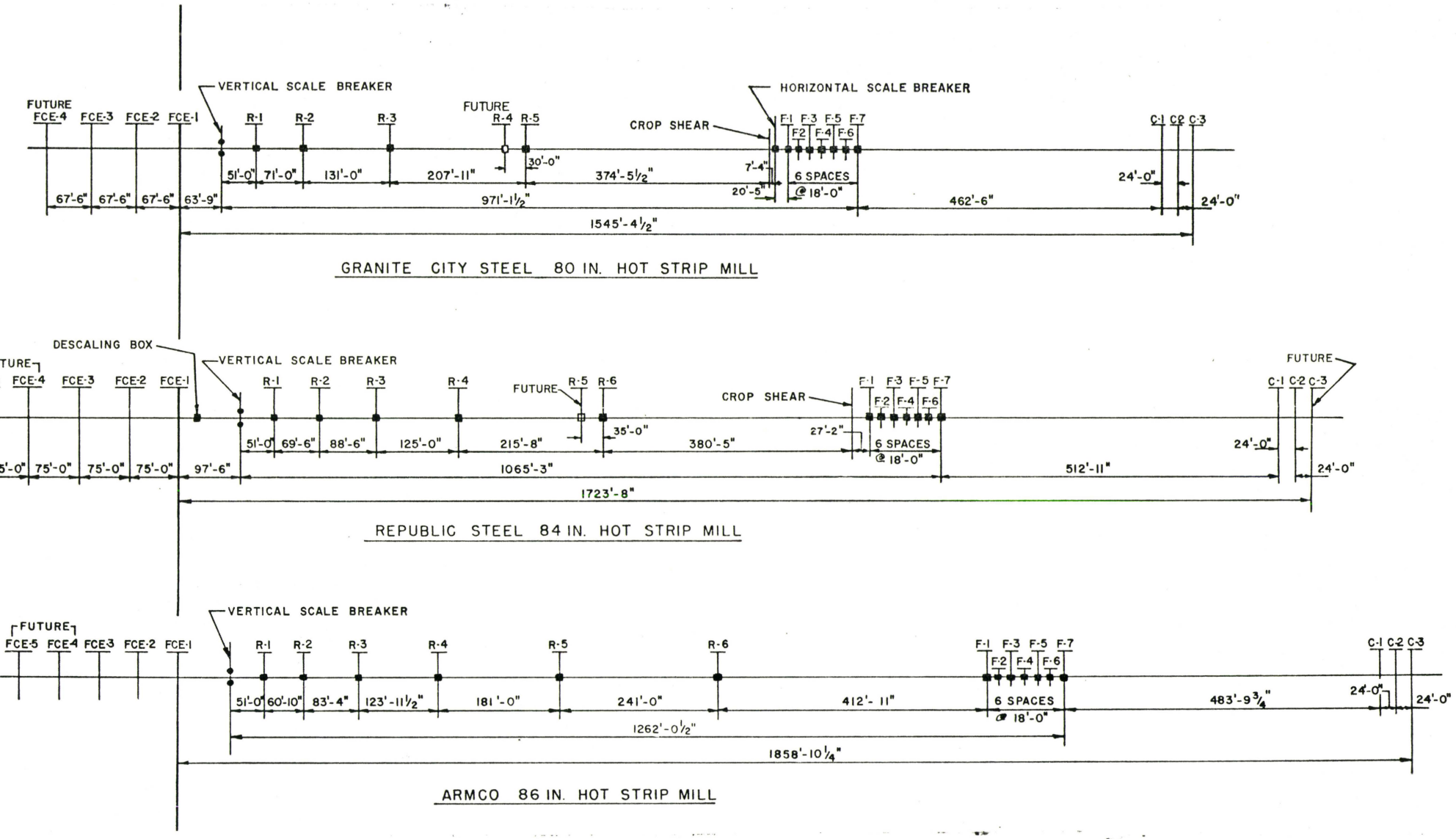

FIG. 2 HOT STRIP MILL ARRANGEMENT

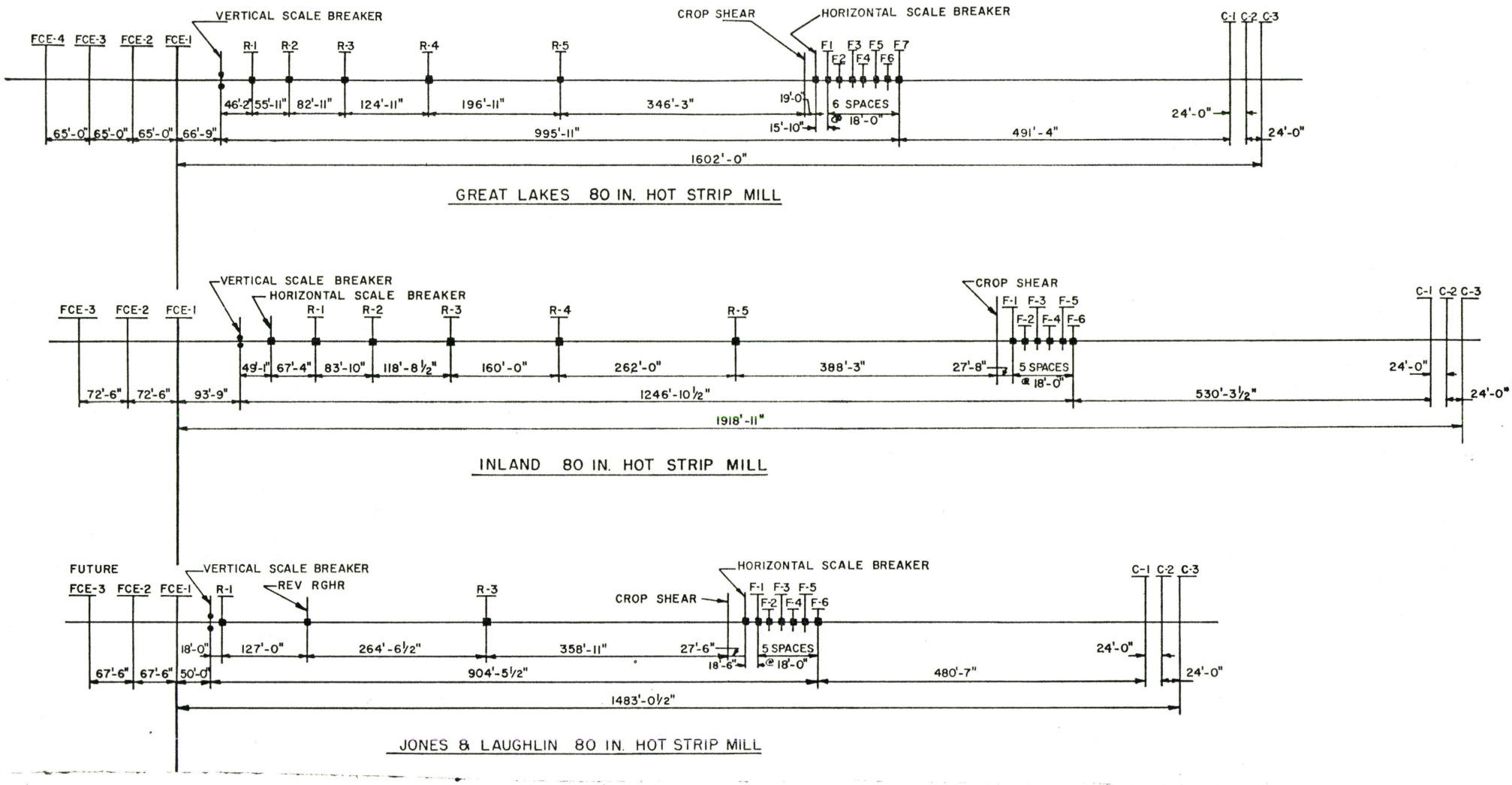

FIG. 3 HOT STRIP MILL ARRANGEMENT

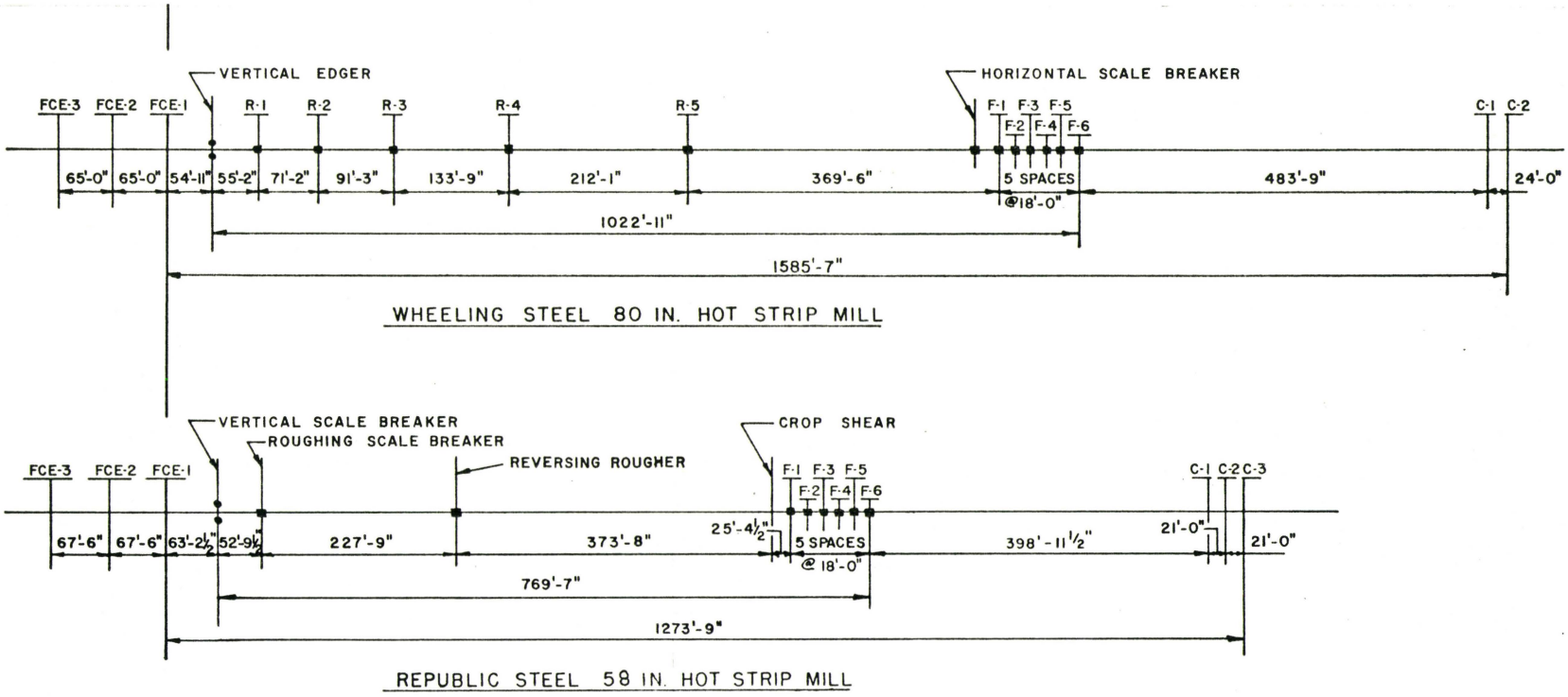

FIG. 4 HOT STRIP MILL ARRANGEMENT

b) Metallurgy of Hot Strip

Wide hot rolled strip from a modern continuous mill may be used with or without the application of such auxiliary treatments as pickling, shearing and flattening. When produced as hot rolled breakdowns for cold reduction, it is pickled in coil form, cold reduced as much as 90 percent of its original thickness.

The metallurgical requirements of the great bulk of the product are relatively simple and lend themselves to best operating conditions on the hot strip mill and subsequent processing units.

The last hot rolling operation (in the last finishing stand) should be conducted above the upper critical temperature on virtually all continuous hot mill flat rolled products. Such a practice permits the rolled steel to pass through a phase transformation after all hot work is finished and produces a uniformly fine ferritic grain throughout all portions of the strip. For the low carbon steels generally used, proper finishing temperatures will have been attained when the product temperature at the last rolling stand is over 1,550°F. This finishing temperature is practical over most thicknesses rolled on modern mills at normal maximum rolling speeds.

If part of the hot rolling is conducted on steel which already has transformed partially to ferrite, the deformed ferrite grains usually will re-crystallize and form patches or layers of abnormally coarse grains during the self anneal induced by coiling or piling at the usual temperatures of 1,200 to 1,350°F. Such a structure is more likely to occur at the surface of the product, which is colder than the interior during rolling. Very thin hot rolled material, inadvertently finished far below the upper critical and coiled too cold to self anneal may retain microstructural evidence of hot working.

Neither condition is suitable for some types of severe drawing applications, both must be corrected by normalizing the strip.

A special case occurs in the steels of the so-called "pure iron" compositions in which the sum of the carbon and manganese contents may be well under 0.10 percent. Such compositions often exhibit a hot short temperature range between 1,650 to 1,900°F, and normal hot rolling in that range may produce deep cracks on the edge of the product.

Accordingly, it is the practise on many mills to complete the roughing operations above the hot short range, to allow the steel to cool through the range by holding it on the conveyor table between the last roughing strand and the finishing train, and to resume rolling by passing the product into the finishing train below the hot short range. By this practice it is impossible to finish above the upper critical temperature of these steels.

The run-out table following the last rolling stand of most hot strip mills is long enough and equipped with enough quenching sprays to cool the single thickness of rolled product $\frac{200°F}{500°F}$ below the finishing temperatures.

In addition, some mills have auxiliary tables or holding beds which allow single-thickness cooling to a take-off temperature of 500°F or lower. The cooling practice is determined by the metallurgical properties of the steel, its suitability for further processing and its final applicability to the intended use.

On hot rolled products properly finished above the upper critical temperature, a uniform ferrite grain has been established and the runout cooling practice determines the carbide characteristics and, to some extent, the grain size. The self annealing effect of a large mass

of steel coiled or piled at around 1,350°F produces considerable carbide agglomeration, a coarse ferrite grain and a soft, ductile sheet. Coiling around 1,200°F yields a fine, dispersed spheroidal carbide in a finer ferrite matrix, resulting in a somewhat harder strip, which still retains excellent ductibility. Even more drastic quenching produces various transformation states of carbide, down to and including martensite. For most low carbon steel made either for use as hot rolled strips or as breakdowns for subsequent cold reduction, coiling temperatures of 1,200 to 1,300°F are employed. This range provides optimum uniformity of mechanical properties without excessive scale formation or over-annealing.

Steels of 0.15 to 0.30 percent carbon content and alloy steels often are quenched drastically to attain higher strength levels from finer carbide dispersions or are coiled very hot to facilitate cold reduction.

3.0 Hot Strip Mill Control

For continuous hot strip mill the most important elements for computer control are: stand speeds, sideguard position, product gauge, and initial section.

Each element must be considered an essential part of any integrated system of computer control of the entire operation of a hot strip mill. In addition to the sensing devices (tachometers, load cells, x-ray gauges) and actuating mechanisms required for successful operation of each individual control system, an overall system controlled by a computer requires further instrumentation. The additional instrumentation is required to enable the computer to accept, analyze and correlate data describing conditions at various stages in the process, perform any necessary calculations, and develop a new set of operating conditions to correct any deviation at any stage of the actual process from the program shoved in the computer's memory by operating regulators and actuating mechanisms that will bring the process within the desired controlled limits.

Since uniformity of grain size and mechanical properties of hot rolled steel are influenced by the temperatures at which finish rolling and coiling occur, the computer exercises further control over the mill operation through both the mill pacing and mill set-up functions to maintain the temperatures of these points within

specified limits over the entire length of each coil. With the assistance of temperature measuring sensors at several points in the mill, the finish mill delivery speed together with all roll openings in both the roughing and finishing mills are modified as required. Run-out table sprays are also subject to computer control, with spray patterns varied according to rolling conditions.

3.1 Control of Strip Temperature

Achieving and maintaining the correct temperature of the strip at the exit of the finishing mill and at the entry to the coiler is one of the most important factors governing the quality of the final product since it vitally effects the grain structure and hence the ductility of the steel. Accurate control of temperature by computer is made difficult by a number of factors which include:

a) Inconsistent heating along the length of and between consecutive slabs.

b) Difficulties of accurate temperature measurement especially at mill entry caused by atmospheric pollution and scale formation.

c) Varying temperature requirements dictated by steel grade and customer requirements.

d) Difficulty of developing accurate mathematical models defining the heat transfer and cooling characteristics of the finishing mill and runout table sprays respectively.

The philosophy largely adopted to date on computer projects on hot strip mills has been that of utilizing one computer to perform all the separate control and logging functions on the mill. Author's thoughts of splitting the duties between a number of computers might be extremely controversial. Such a configuration

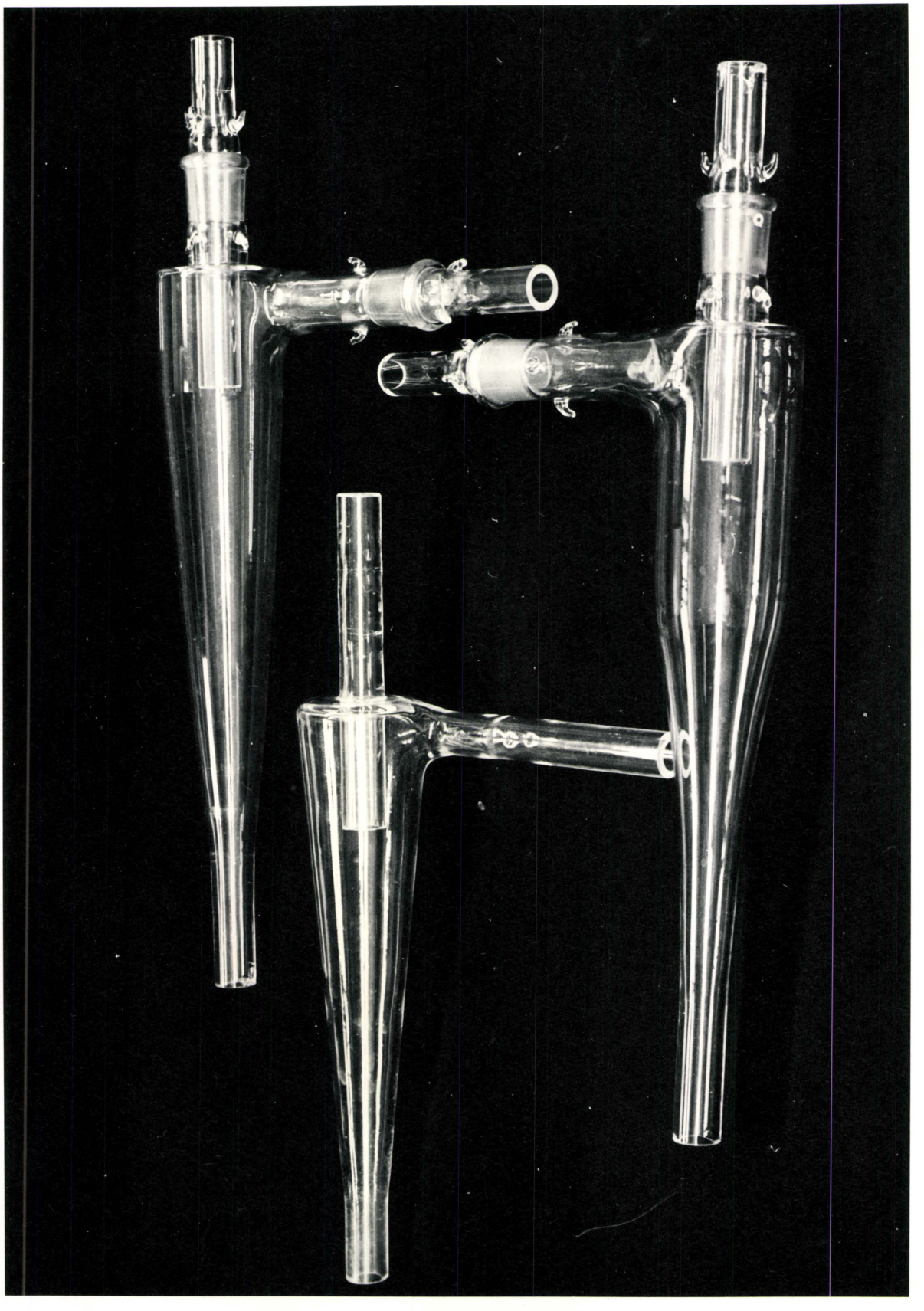

could consist of a control computer which would perform the combined duties of A.G.C. and all mill auxiliaries position control, utilizing direct digital control techniques, a process computer to perform all mill set-up duties, *a process computer to perform all temperature control duties including slab furnace control* and a logging computer to perform all quality, engineering and production logging duties.

Figure 5 illustrates in schematic form the temperature control.

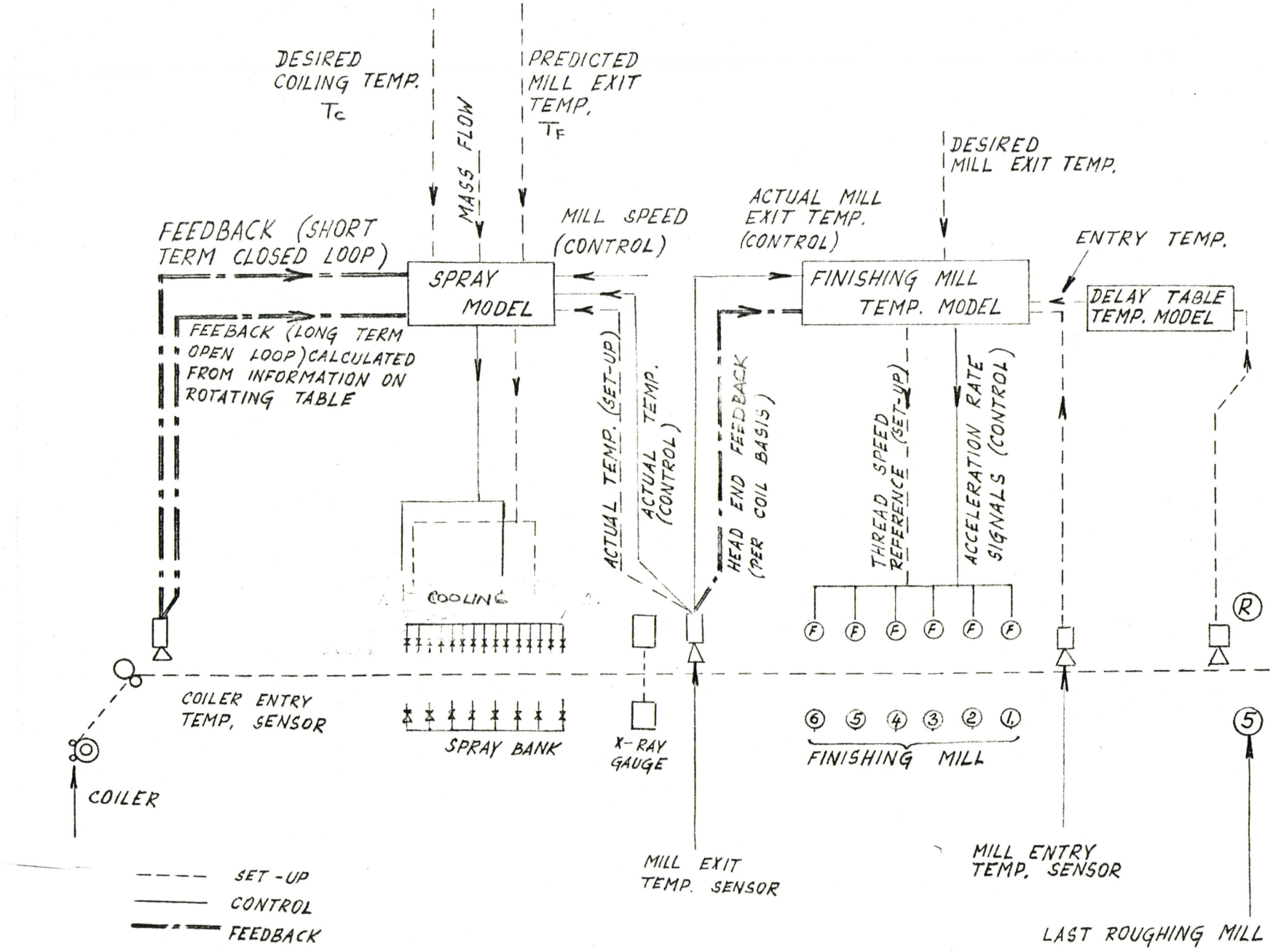

FIG. 5 HOT STRIP MILL CONTROL

4.0 Conventional Hot Strip Mill Runout Table

Runout table is located between the last stand of finishing mill and the coiler. It is the last place where some action may be done to achieve the changes in strip structure by means of water cooling.

For runout table arrangements see figures 1,2,3 and 4.

4.1 Conveying

The runout table, which is usually 450 to 500 ft. long, uses hollow cast iron rollers on forged steel hubs. Rollers are 12 in. diameter, on 18 in. centers, and are skewed and canted to keep the strip centered as it travels over the table.

The rollers run in roller bearings, spherical type on the drive side and cylindrical type on the free end, or perhaps spherical on both sides. The entire roller assembly, including bearing cages and motor, is mounted on a common independent frame which is bolted to the table beams. The rollers are driven by individual d-c motors of 4 or 5 hp under adjustable voltage control, at speeds slightly in excess of the finishing speed. After the coiler mandrel picks up the load the table speed drops to match speed with the finishing stand. The table is divided into five or six control sections, and designed to accelerate at rates of 200 to as much as 400 fpm per sec. The rates normally used are lower 5 to 40 fpm per sec.

Following sketches show typical modern design of runout table and its lengths in recently built hot strip mills.

For runout table roll see drawing. Table 1 shows table lenths, numbers of rollers, roller diameter, roller

spacing and maximum roller table speed in recently built mills.

Table 2 shows type of drives used for driving runout table rollers.

ble 1 : Runout Tables

Plant No.	Table Length	No. of Rollers	Roller Diameter	Roller Spacing	Max. Speed
	ft		in	in	fpm
1	400	267	-	18	2 500
2	472	316	-	18	3 455
3	474	305	-	18	3 750
4	459	306	12	18	3 770
5	530	342	12	18	4 000
6	478	318	-	18	3 730
7	444	297	12	18	3 770
8	483	321	12	18	4 400
9	500	336	12	18	4 000
10	495	319	12-1/4	18	4 320
11	493	322	12	18	4 200

Table 2 : Runout Table Drives

Plant No.	Drives	
1	individual	3 - horsepower d-c motors
2	individual	4/5.88 horsepower d-c motors
3	individual	5.6/11.2 - horsepower d-c motors
4	individual	4 - horsepower 750/1200 tpm d-c motors
5	individual	4/6.7 - horsepower d-c motors
6	individual	4/6.4 - horsepower d-c motors
7	individual	4 - horsepower 750/1200 rpm d-c motors
8	individual	4/7.5 - horsepower d-c motors
9	individual	5 - horsepower d-c motors
10	individual	5/9 - horsepower d-c motors
11	individual	4/7.2 - horsepower d-c motors

4.2 Cooling

Between 250 and 350 ft. of the runout table is equipped with cooling water systems. Top cooling may consist of banks of headers carrying nozzles operating at pressures of 200 to 250 psi or it may consist of a low pressure stream flow system, wherein water flows at almost no pressure from overhead siphon tubes of about 3/4 in. diameter.

Tests have shown the low pressure system to be 30 to 40 percent more efficient than turbulent jets. Table 3 shows typical modern installations which provide 20,000 to 45,000 gpm for top cooling and 6,000 to 15,000 gpm for bottom cooling.

Table shows strip finishing temperature, coiling temperature and water quantity used for strip cooling.

ble 3 : Runout Cooling

Plant No.	Strip Temperature		Cooling
	Finishing T_F (°F)	Coiling T_C (°F)	Water Quantity
1	Up to 2000	1000/1600	Top - 12 000 GPM @ 150 psi Bottom - 4000 GPM @ 50 psi
2	1530/1700	950/1350	Top - 12 000 GPM @ 30-300 psi Bottom - 4 400 GPM @ 60
3	1400/1800	1000/1700	Top - laminar 10 000 GPM Bottom - + sprays at top and bottom
4	-	900/1400	Top - 1800 GPM @ 200 psi Bottom - 6000 GPM @ 10 psi
5	1400/1750	900/1300	Top - 21 000 GPM at 250 psi Bottom - 4875 GPM @ 60 psi
6	1450/1600	950/1300	Top - laminar 45 000 GPM Bottom - 15 000 GPM
7	1500/1650	-	Top - laminar Bottom - at 35 psi
8	1440/1605	900/1600	Top - laminar 21 000 GPM Bottom - 25 000 @ 10 psi
9	1500 +	950/1450	Top - 28 000 GPM @ 250 psi Bottom - 32 000 GPM @ 45 psi
10	1500/1750	900/1300	Top - laminar 45 000 GPM Bottom - 15 000 GPM @ 5-20 psi
11	1450/1850	1060/1700	Top - laminar 33 000 GPM Bottom - 7 000 GPM @ 29 psi

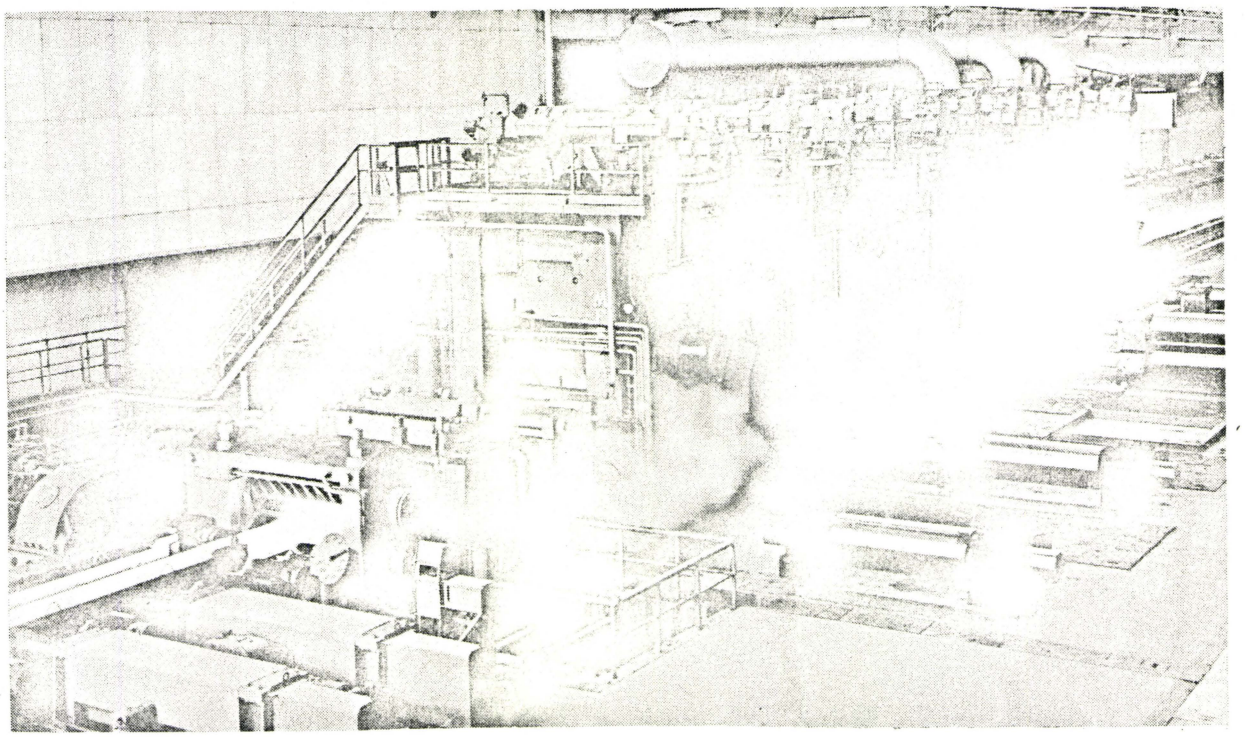

FIG. 6. GENERAL VIEW OF FINISHING TRAIN, SHOWING CROP SHEAR AND DESCALING UNIT PRECEDING THE TRAIN

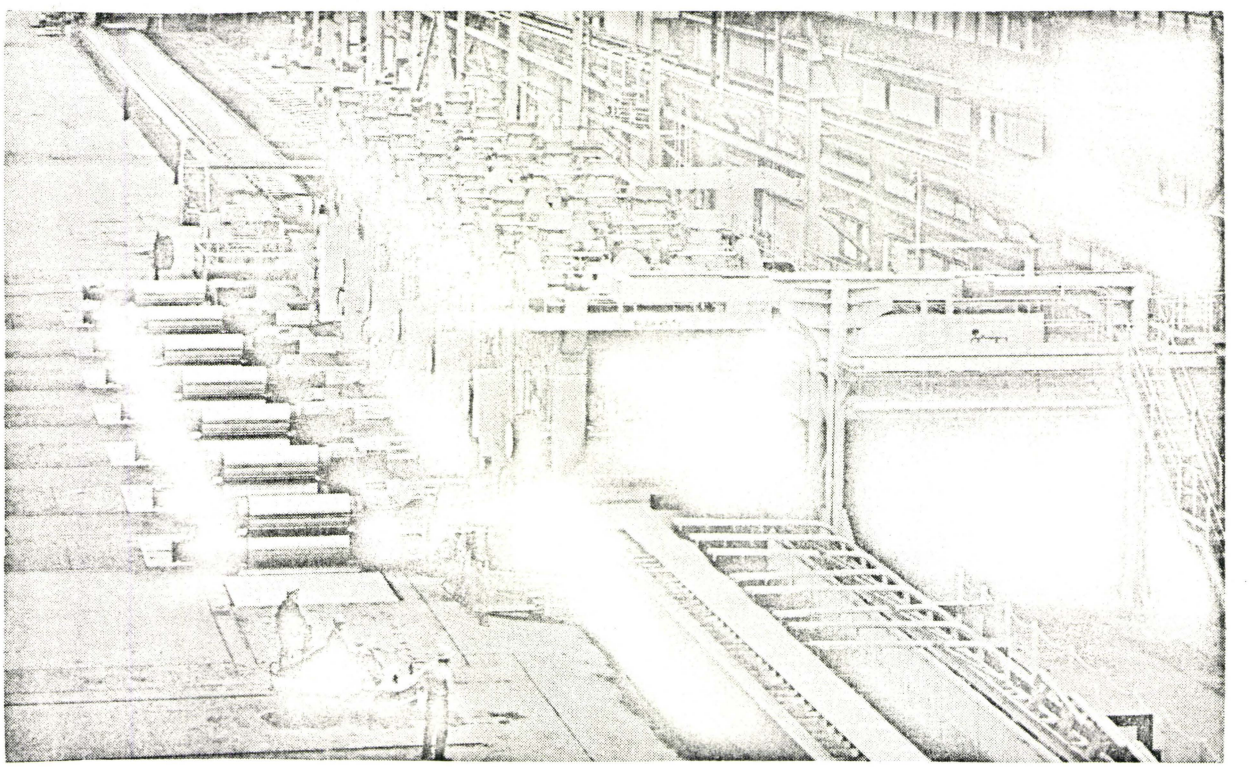

FIG. 7. GENERAL VIEW OF FINISHING TRAIN, SHOWING EXIT AND PART OF RUNOUT TABLE WITH COOLING SPRAYS

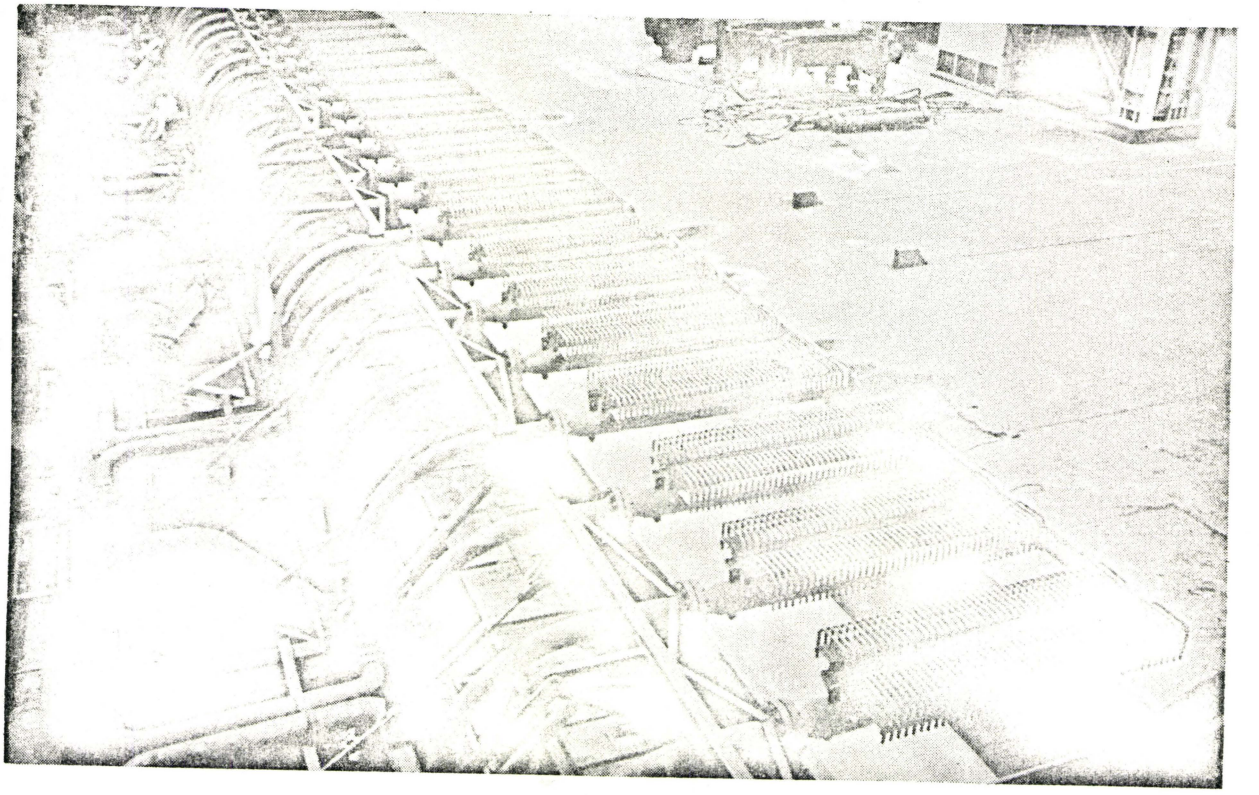

FIG. 8. VIEW SHOWING ARRANGEMENT OF HEADERS AND PIPES FOR LOW PRESSURE STREAM COOLING ON RUNOUT TABLE

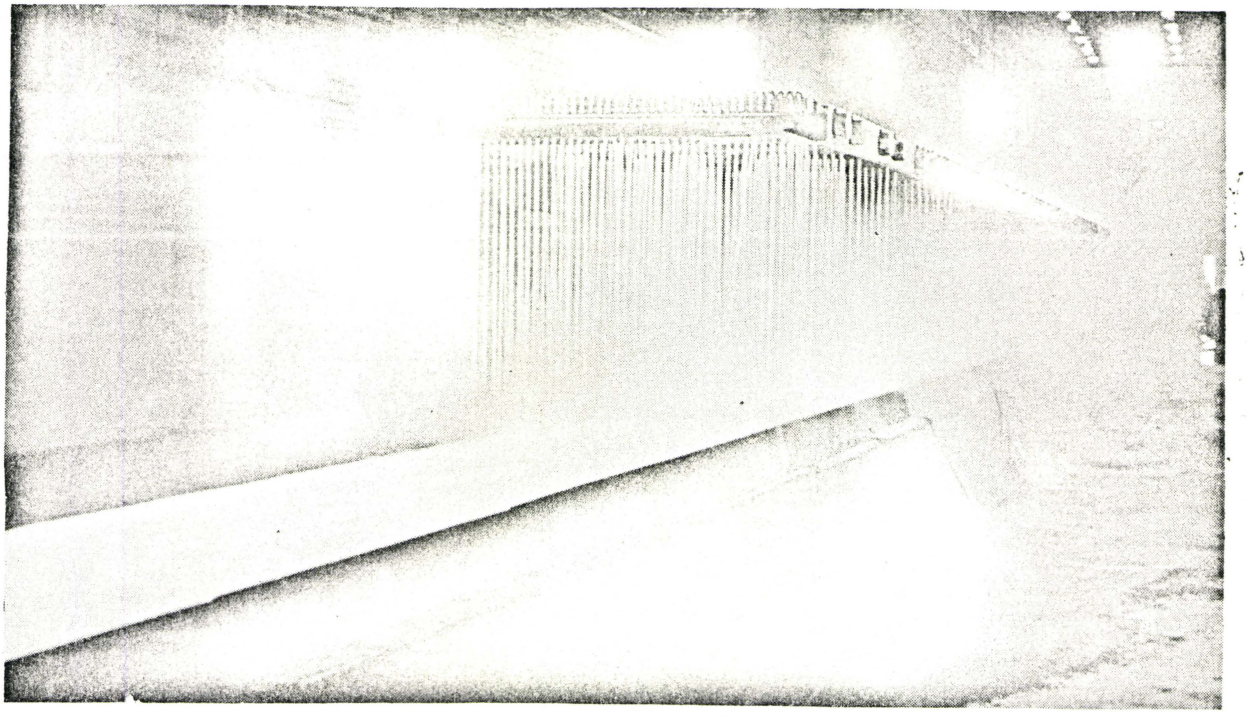

FIG. 9. LOW PRESSURE STREAM COOLING ON THE RUNOUT TABLE IS FAVORED BY MOST RECENT MILLS

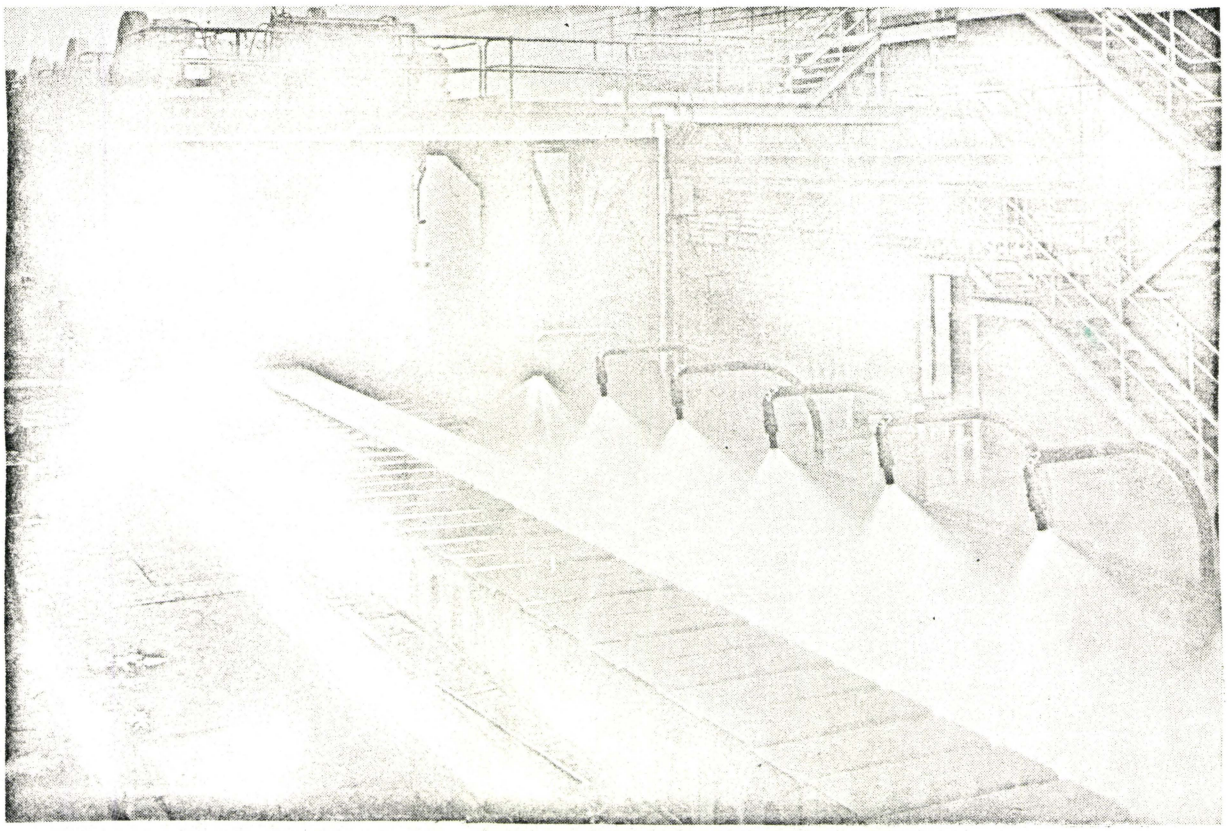

FIG. 10. COOLING ON THIS RUNOUT TABLE IS ACCOMPLISHED THROUGH WATER SPRAYS OF PRESSURE UP TO 200-250 psi

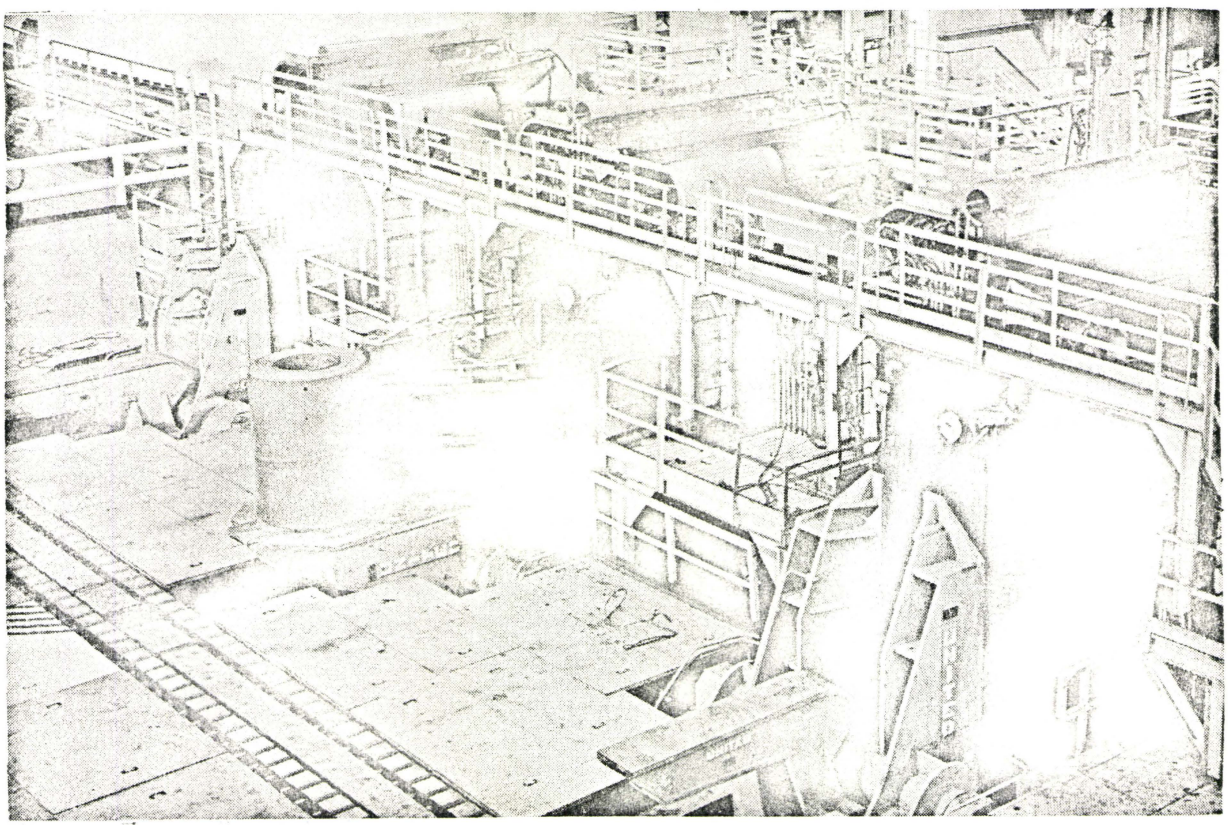

FIG. 11. END OF THE RUNOUT TABLE - THREE DOWNCOILERS ON 24 ft. CENTERS

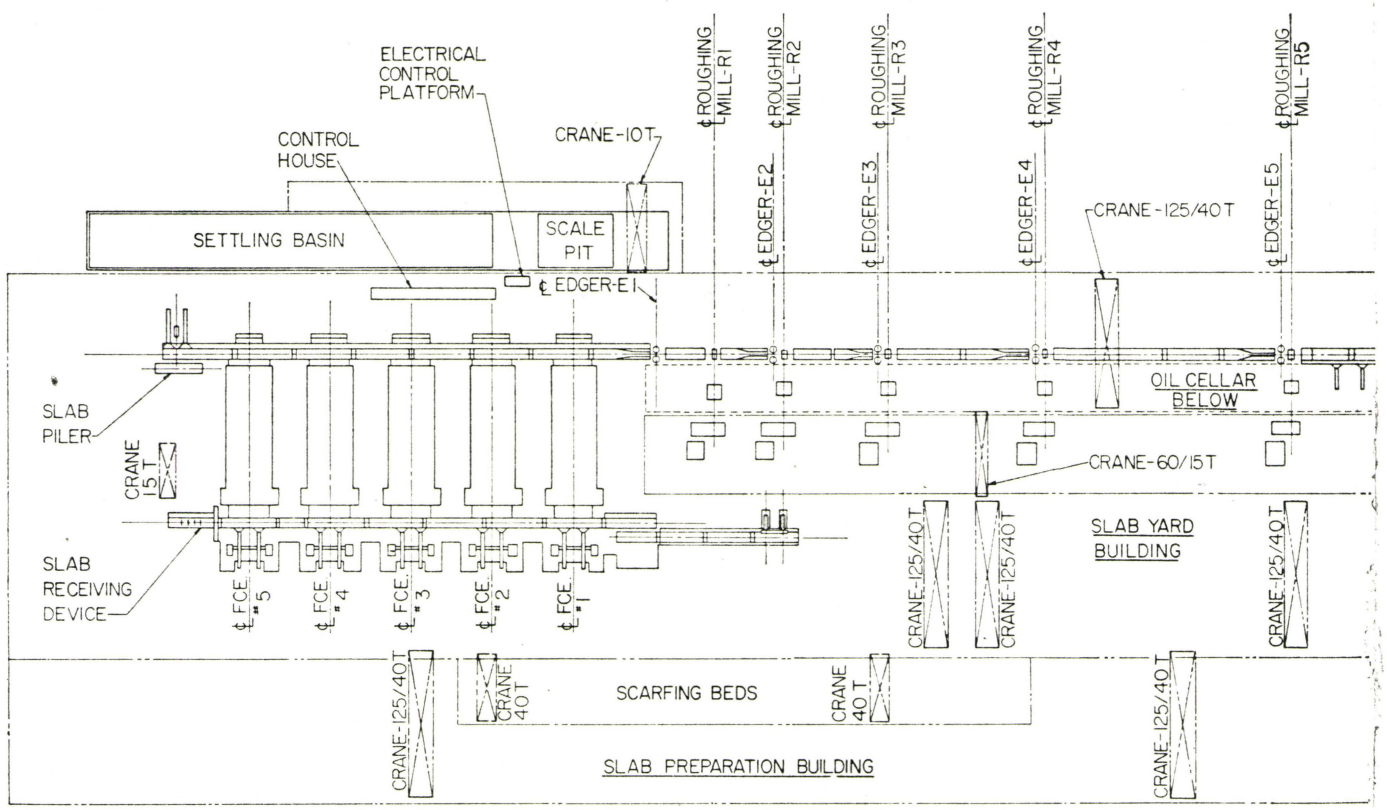

FIG. 12. GENERAL ARRANGEMENT OF HOT STRIP MILL

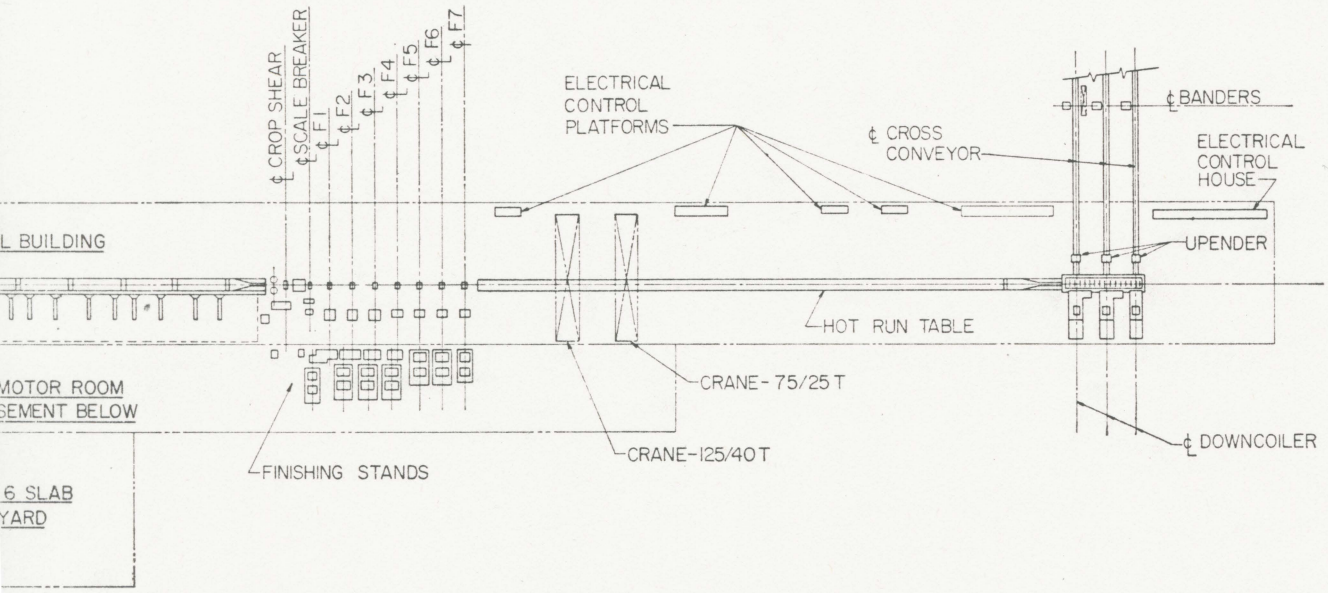
¢ CROP SHEAR
¢ SCALE BREAKER
¢ F1
¢ F2
¢ F3
¢ F4
¢ F5
¢ F6
¢ F7
ELECTRICAL CONTROL PLATFORMS
¢ CROSS CONVEYOR
¢ BANDERS
ELECTRICAL CONTROL HOUSE
L BUILDING
UPENDER
HOT RUN TABLE
MOTOR ROOM
SEMENT BELOW
CRANE - 75/25 T
CRANE-125/40 T
¢ DOWNCOILER
FINISHING STANDS
6 SLAB
YARD

5.0 Air Cushion Principles

It is well known that two surfaces may be kept apart by introducing a supply of liquid between them. This arrangement constitutes a bearing with a very low friction between the surfaces. The potential advantages inherent in the application of this principle to a strip runout table are great, in that it is possible to avoid differential speeds of the strip and the roller without the necessity for adjusting and maintaining the speed of the rolling mill and the roller table. The strip surface will not be marked by contact with the rolls. Due to the simple design without moving parts the capital and operating costs are only a fraction of the conventional runout table costs.

Type of Liquid

From operating cost point of view there are only two types of liquids which could be economically used as a lubricant between the moving strip and the supporting surface:

1) water
2) air.

However, runout table is used primarily as a place for lowering the strip temperature to desired level. High rolling speeds does not allow sufficient time necessary for natural cooling the strip (unless the table is extraordinarily long), water is used as a cooling

medium. The amount of water used for cooling differs according to the strip thickness G, and metallurgical requirements. Therefore water cannot be used in this particular application.

An air cushion device requires air to be supplied between the support and body surface at a pressure which will provide resultant forces to maintain the body above the support. The leakage of this air from beneath the device must be kept to a minimum to reduce power losses. The clearance between the air cushioned body and the surface of the support may be only a fraction of an inch.

This clearance, or "air gap" must be adequate to prevent surface contacts in order to take advantage of the low friction forces of the supporting layer of air. Air is a nearly ideal supporting medium because it is a low density mixture of gases with an extremely low viscosity.

A strip supported on a cushion of air, therefore, has a relatively friction-free surface to travel upon and is thus capable of high speeds for a given amount of thrust. Movement of air supported strip at low speeds is easily accomplished with almost insignificant thrust forces.

There are several types of air-cushion arrangements in general use today. The plenum type is the simplest from a mechanical standpoint, but it is not as stable as is desired, see figure 13.

The peripheral-air curtain type of air cushion proved to be the most successful in Hovercraft vehicles. It is more efficient than the plenum type, although somewhat more complicated. The peripheral system would appear to be always preferable. Figure 14.

For wider supported bodies is convenient to use recirculation principle where under surface intakes recover the air curtain and re-issue it to give secondary and even tertiary air curtains, see figure 15.

THE HYDROSTATIC THRUST BEARING

This system requires air to be supplied under pressure through a number of small orifices recessed in pockets in the bearing surface. The air escapes through the bearing clearance to atmosphere. The load which this form of bearing can support is proportional to the number and area of the pockets, and to the air supply pressures. Also, for a given pressure, the volumetric air flow rate determines the bearing lift. The principle is very simple, however, the power required for air supply is prohibitive. Clearance gap H obtained is very small (0.005 in.), see figure 16.

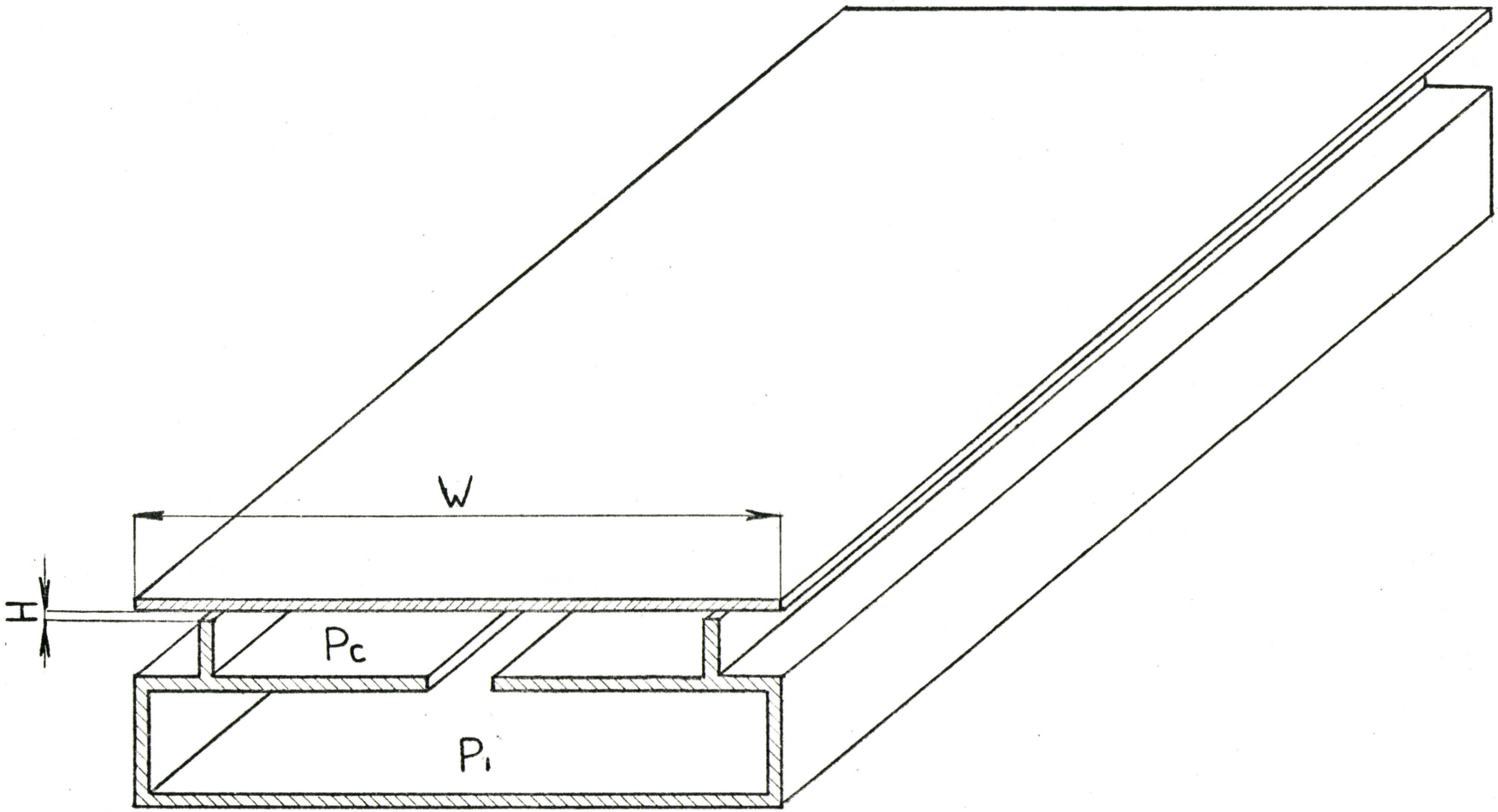

FIG. 13. THE PLENUM CHAMBER

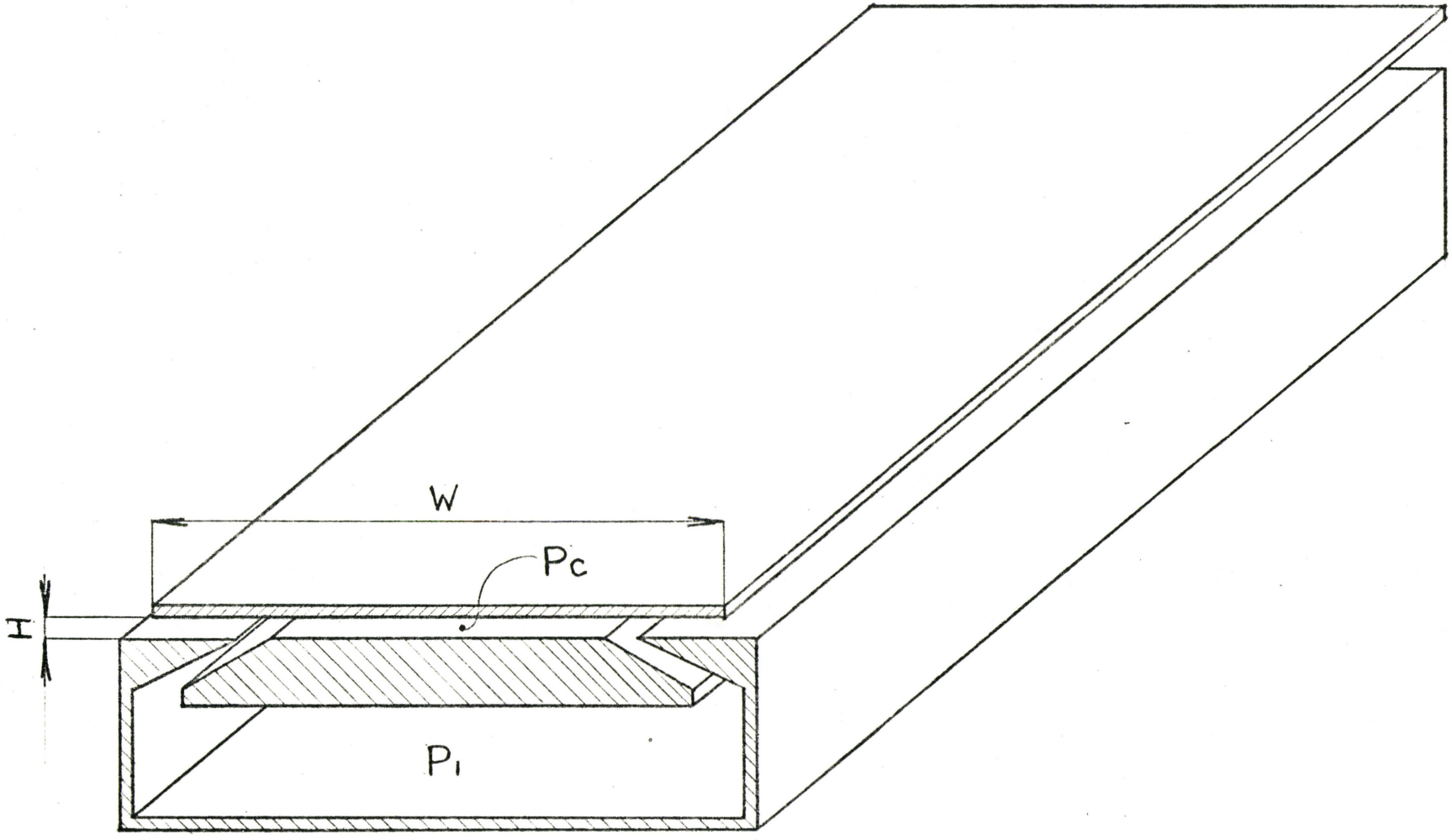

FIG. 14. PERIPHERAL JET PRINCIPLE

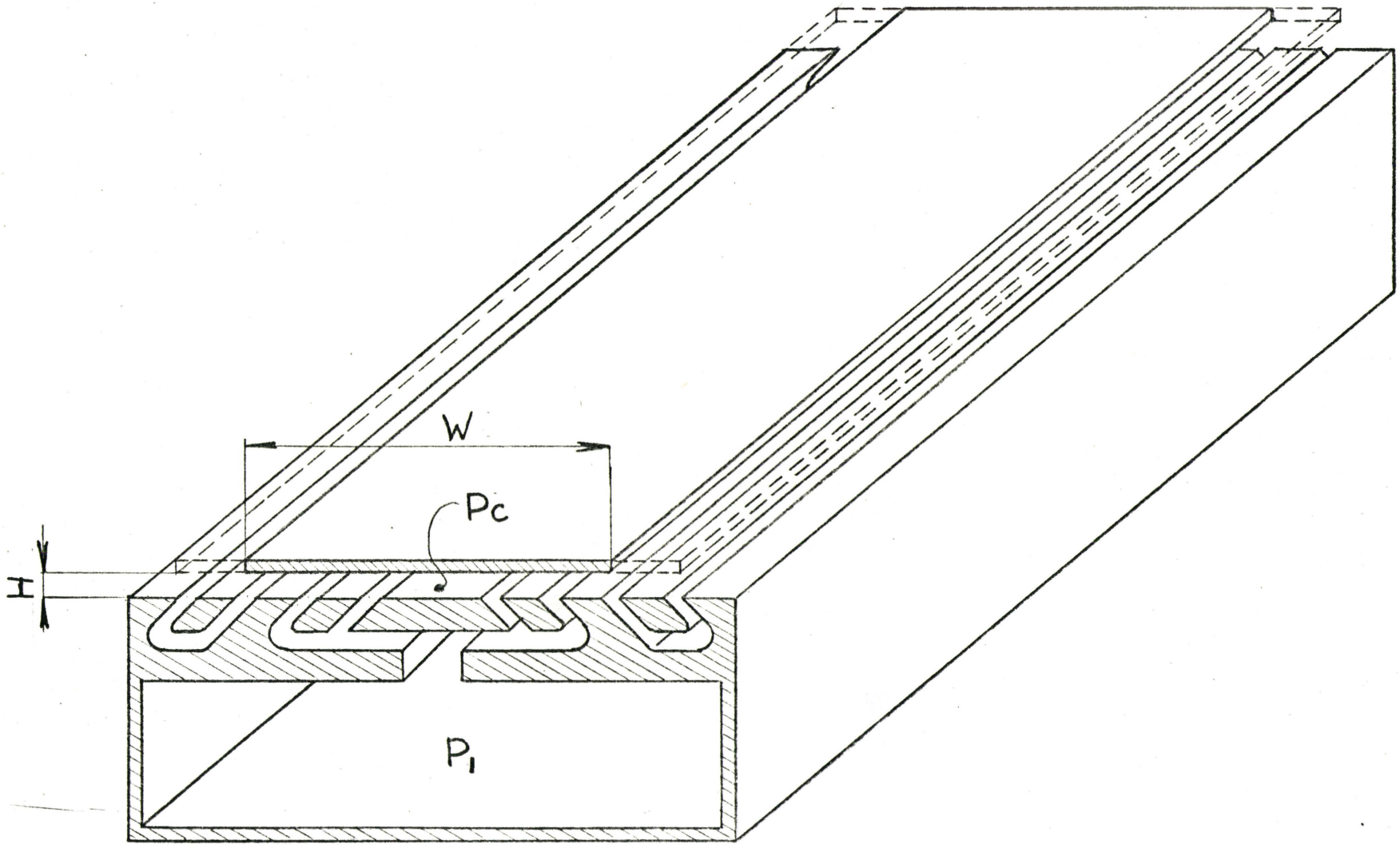

FIG. 15. RECIRCULATION SYSTEM

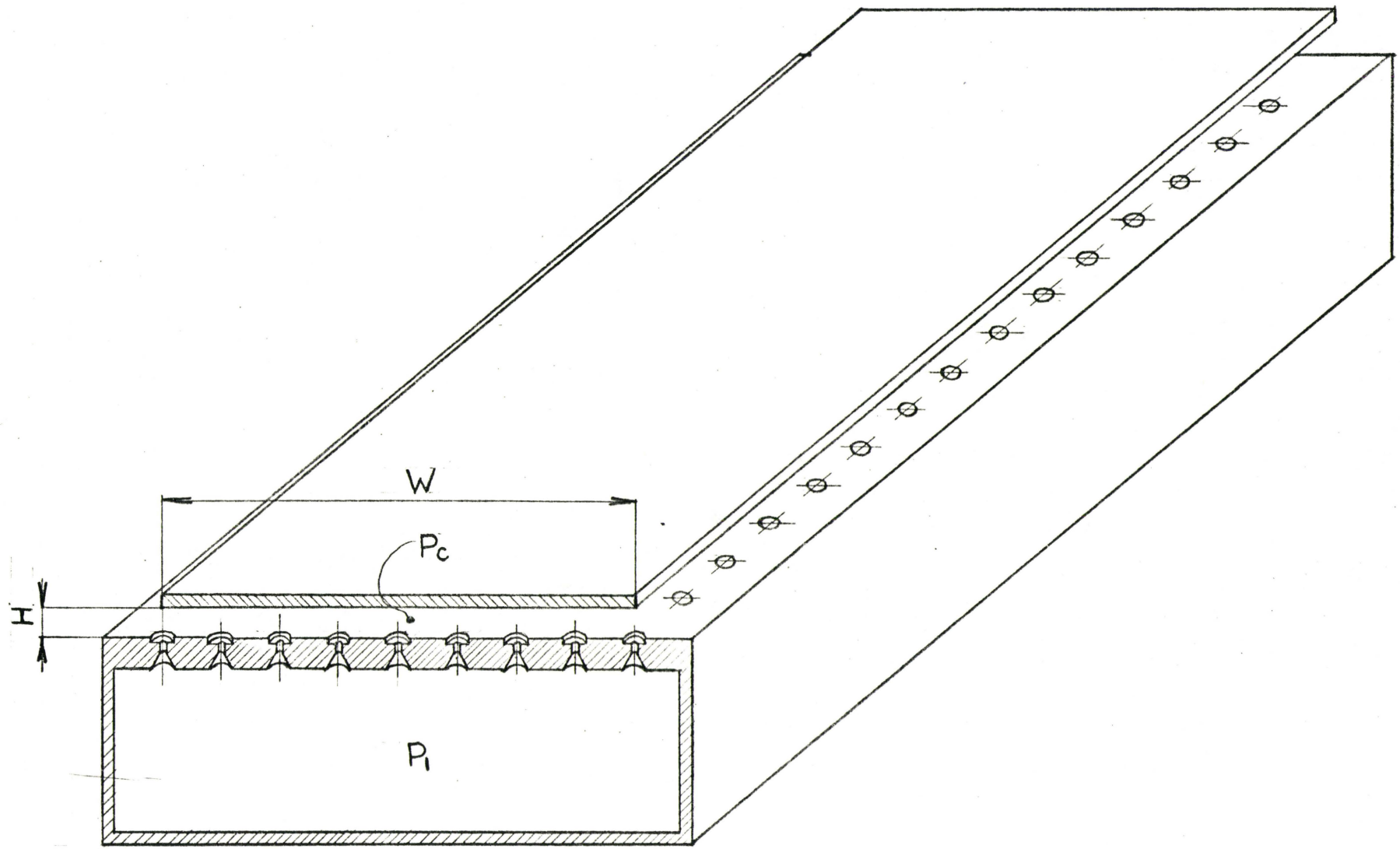

FIG. 16. THE HYDROSTATIC THRUST BEARING

6.0 Practical Application of Air-Cushion Principles

6.1 Hovercrafts

6.2 Hover Pulley

6.3 Aero-Go System

6.4 Air-Jet Conveying Method

6.1 Hovercraft

The air-cushion principle is proving to be practical concept, economically feasible for military, commercial and pleasure vehicles. The experimental applications of these principles to other devices such as trains on special rails, tracks or tubes is indicative of the trend toward utilizing this principle in practical way. (Figure 17).

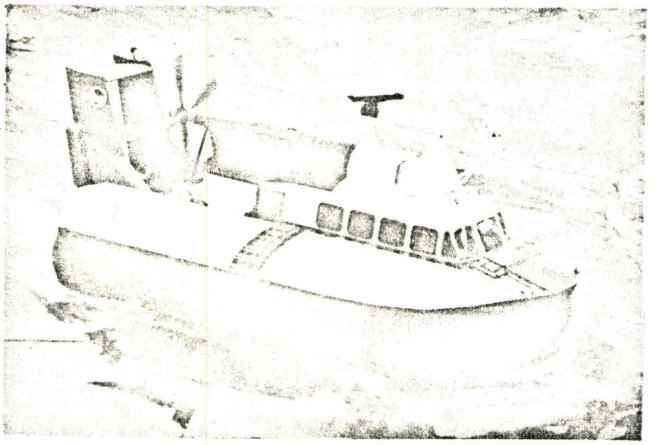

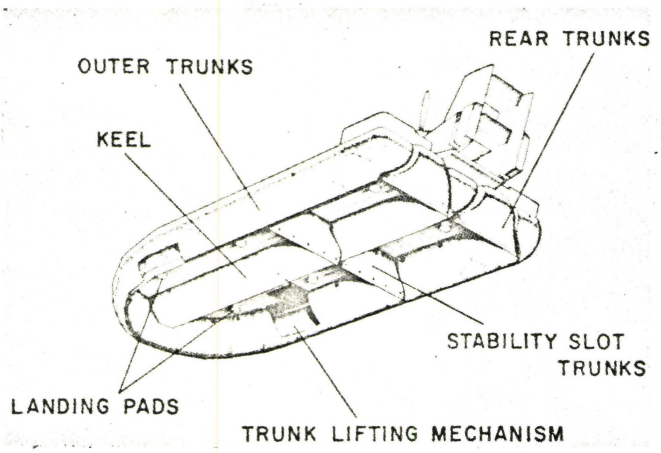

FIG. 17. HOVERCRAFT

6.2 Hover Pulley

BISRA have developed a new device, the Hover Pulley, which enables thin steel strip to be guided through mill processing lines on cushions of gas or liquid, so avoiding the use of guide rolls.

The cushion is formed by blowing a quantity of low pressure gas or liquid between the strip and the guide service. In principle the method is similar to that used in the hovercraft in that a pressure rise occurs within the area bounded by jets, if the jets are in close proximity to a boundary surface.

The laboratory rig built by BISRA supplies air for the cushion at between 20 and 30 in Hg. Strip 12 in. wide by 0.008 in. thick has been used on the tests and the gap between the strip and the bearing surface is in the order of 1/10 in. The jets are 10 in. apart and about 1/10 in. wide. It appears that as long as the edge of the strip overlaps the peripheral slits of the jet, sufficient lift is obtained.
(Figure 18)

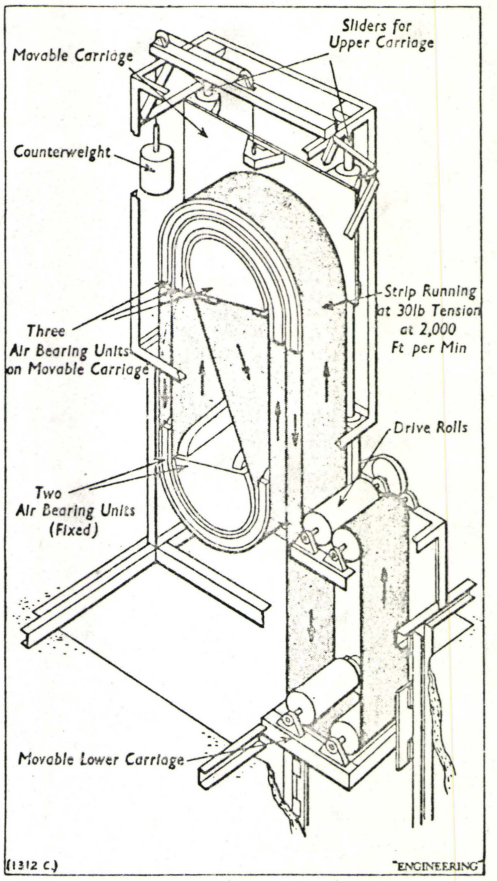

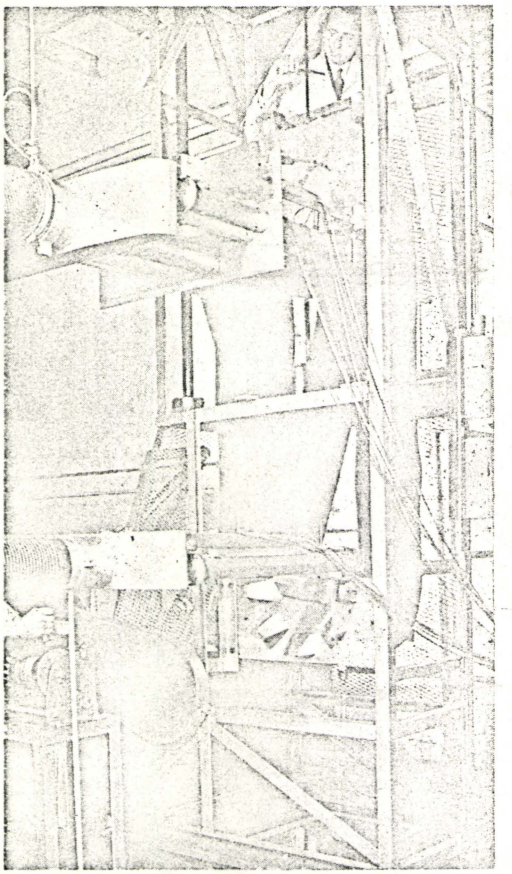

FIG. 18. HOVER PULLEY - THE LABYRINTH LOOPING TOWER AT BISRA'S BATTERSEA LABORATORIES SUPPORTS STRIP 12 in WIDE, 0.008 in THICK ON A CUSHION OF AIR

6.3 Aero-Go System

With Aero-Go's air bearing transporters, loads are lifted from the ground and held suspended - in effect "floated" on a friction-eliminating cushion of air.

First, low pressure air is introduced into the flexible torus bag. As the "doughnut" inflates, air is also forced into the plenum chamber. When the total downward force of the air in the flexible chamber exceeds the payload, the load floats off the floor. Since there is a direct and unique path of air between torus bag and plenum chamber, the aero caster is self-stabilizing. No external tanks are needed to assure stability. Within the limit of the caster design capacity, the load lifted is in direct proportion to the air pressure applied. Air source may be plant air fed by the hose, self-contained electrical or gas engine driven blower. (Figure 19).

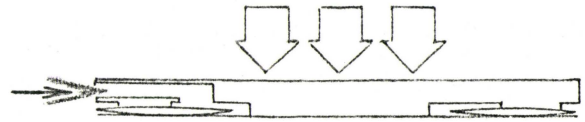

STEP ONE: AERO-CASTER AT "REST". THE LOAD IS SOLIDLY SUPPORTED ON THE LANDING PADS. BLACK ARROWS REPRESENT AIR FLOW.

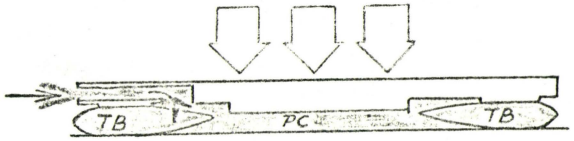

STEP TWO: AIR ENTERS FLEXIBLE TORUS BAG (TB) AND PLENUM CHAMBER (PC). TORUS BAG INFLATES.

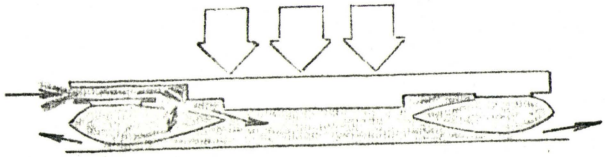

STEP THREE: WHEN AIR FORCE IN PLENUM CHAMBER EXCEEDS TOTAL LOAD, CASTERS THEN FLOATS LOAD OFF THE FLOOR.

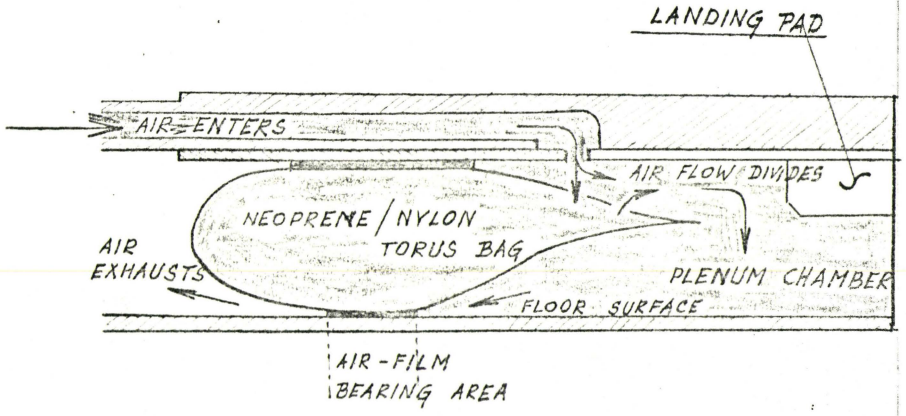

FIG. 19. AERO-60 SYSTEM

6.4 Air-Jet Conveying Method

The conveyor consists of a multiorificed plate or "deck" which forms the top of a pressurized plenum chamber. The air is introduced through relatively large openings at a high velocity (on the order of 100 FPS). The orifices are formed such that there are significant air-velocity components parallel to the conveyor deck.

Since the openings are arranged to give a directional flow, the family of co-operative jets produces a resultant sheet of air just above the deck which is capable of entraining solid and liquid matter and transporting it in a layer which need only be contained by sidewalls.

When air is introduced throughout the length of the plenum, the jets always provide a vertical component of air velocity which lifts the material to negate frictional drag by "floating" the material in the airstream where the horizontal component can take over to accomplish lateral motion of the entrained material.

Advantages which are unique to the air-jet system are:

1) Power requirements are lower since the material need not to be accelerated to excessive velocities.

2) The conveyor can be fed at any point since it is open to the atmosphere.

3) A wide variety of sizes and shapes of materials can be handled since they need not fed or discharged from the conveyor through air locks.

4) In most cases there is little or no contact between the conveyed materials and the conveyor. (Figure 20).

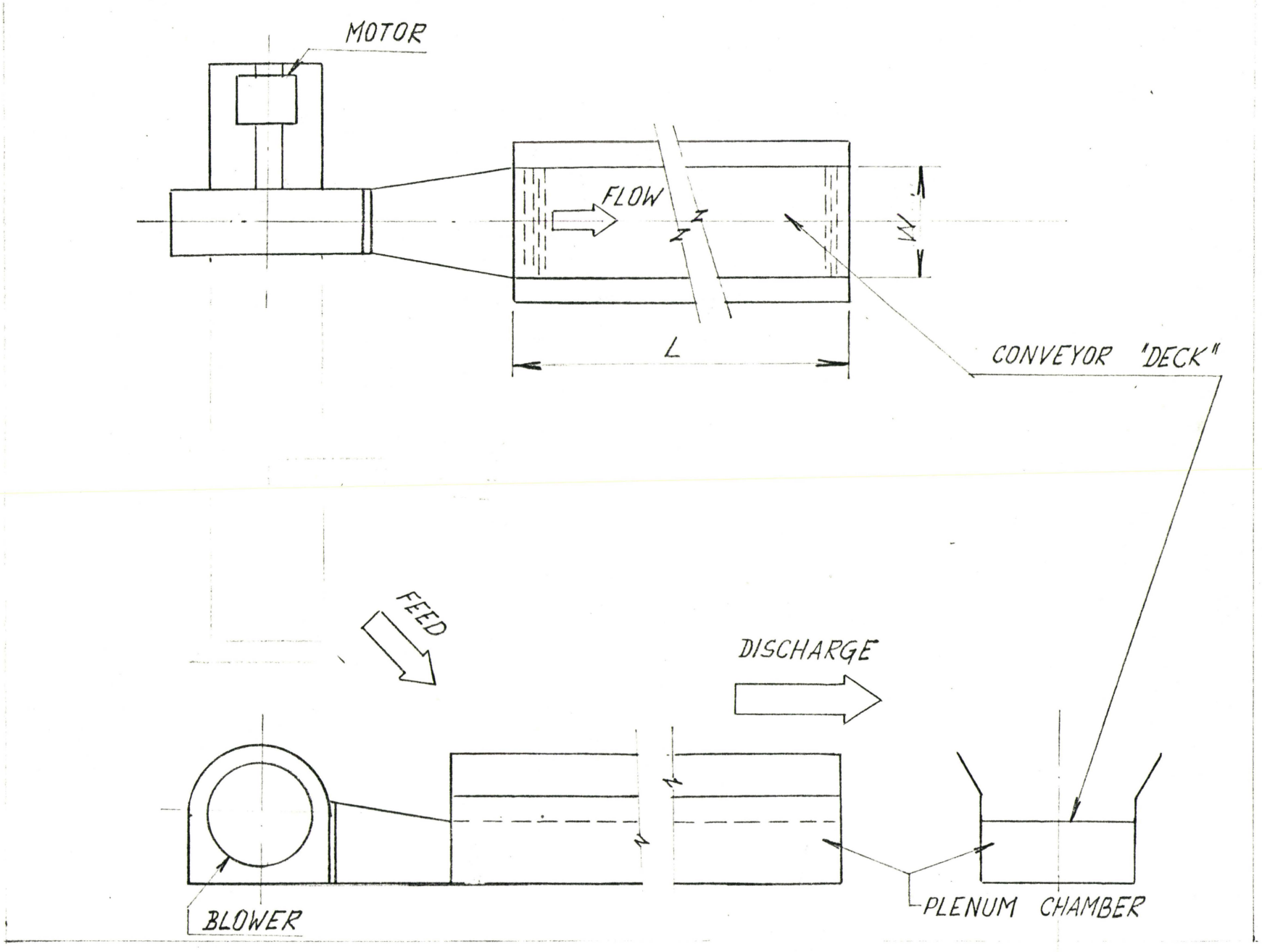

FIG. 20. AIR JET CONVEYING SYSTEM

7.0 Air Cushioned Runout Table

The conventional Hot Strip Mill Runout Table as used today has several weak points.

a) High Capital Cost - (expensive bearings, electro motors, heavy, forged rollers, complicated speed control).

b) High Operating Cost - frequent maintenance which results in mill delays (production losses) and numerous maintenance crew (expensive labor). - Energy consumption is unproportionally high (D.C. current is used for driving the rollers).

c) Damaged Product - due to the difference between strip speed and roller speed the strip surface is damaged by the rough roller surface.

The purpose of Runout Table is conveying hot strip from rolling mill to coiler. The strip dimensions which varies insignificantly help to find a solution for a new type of runout table.

7.1 Air Cushioned Run-Out Table - Derivation of Basic Equation

Considering the two-dimensional flow,it is assumed that the velocity v of the jet is uniform across the nozzle.Escaping air fills the gap between the strip and table surface.

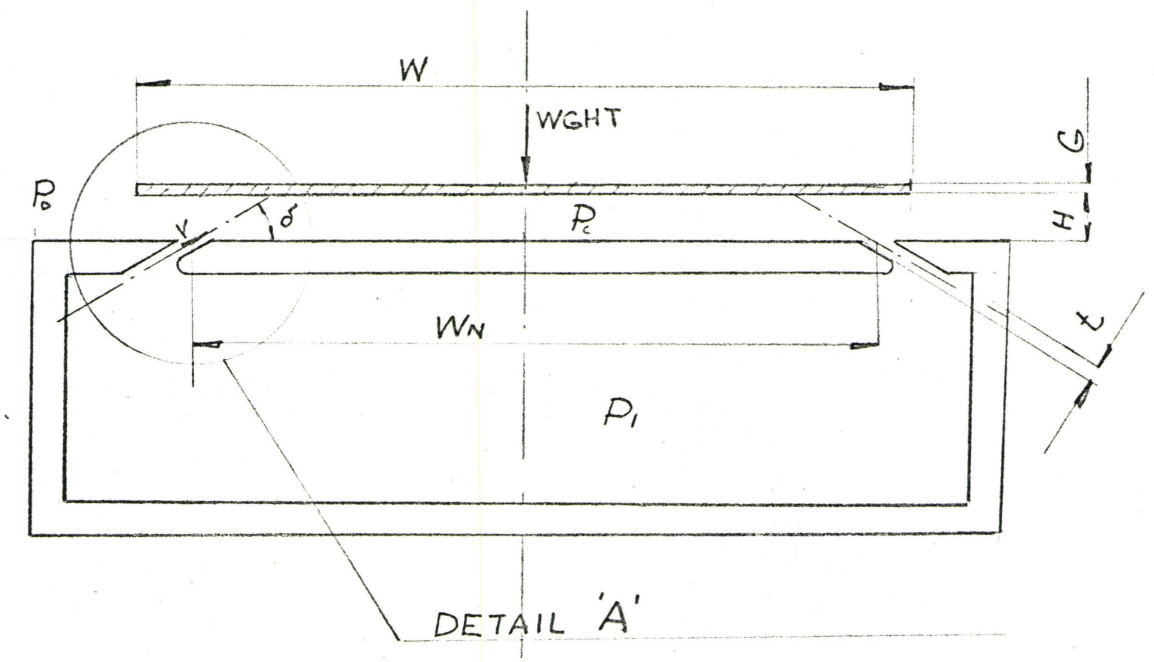

FIG. 21. TWO-DIMENSIONAL JET SYSTEM - HOVERCRAFT PRINCIPLE

Detail "A" - Formation of Air Curtain, see page 52

Without considering boundary layer effects and frictional losses through the nozzle orifice, the total thrust on unit length of the curtain due to the air pressure in the cushion must equal the rate of change of momentum of the air jet in the direction parallel to the surface.

Mathematical expression of the mechanism:

$$-P \times H = \int_{y=0}^{H} \rho \cdot V_x \cdot dy = \int_{\delta=\delta_o}^{\Pi} \frac{d(V_m.\cos\delta)\ d\delta}{d\delta} \qquad (1)$$

$$P \times H = \int_{y=0}^{H} \rho \cdot V_x\ (V_x + V_x.\cos\delta_o)\, d\delta \qquad (2)$$

$$P \times H = \rho \cdot V_x \cdot H\ (V_x + V.\cos\delta) \qquad (3)$$

The volume flow past all points is assumed constant

$$V_x \times H = V \times t \qquad (4)$$

Therefore

$$\underline{\underline{P \times H = \rho \cdot V^2 \cdot t\ (\frac{t}{H} + \cos\delta)}} \qquad (5)$$

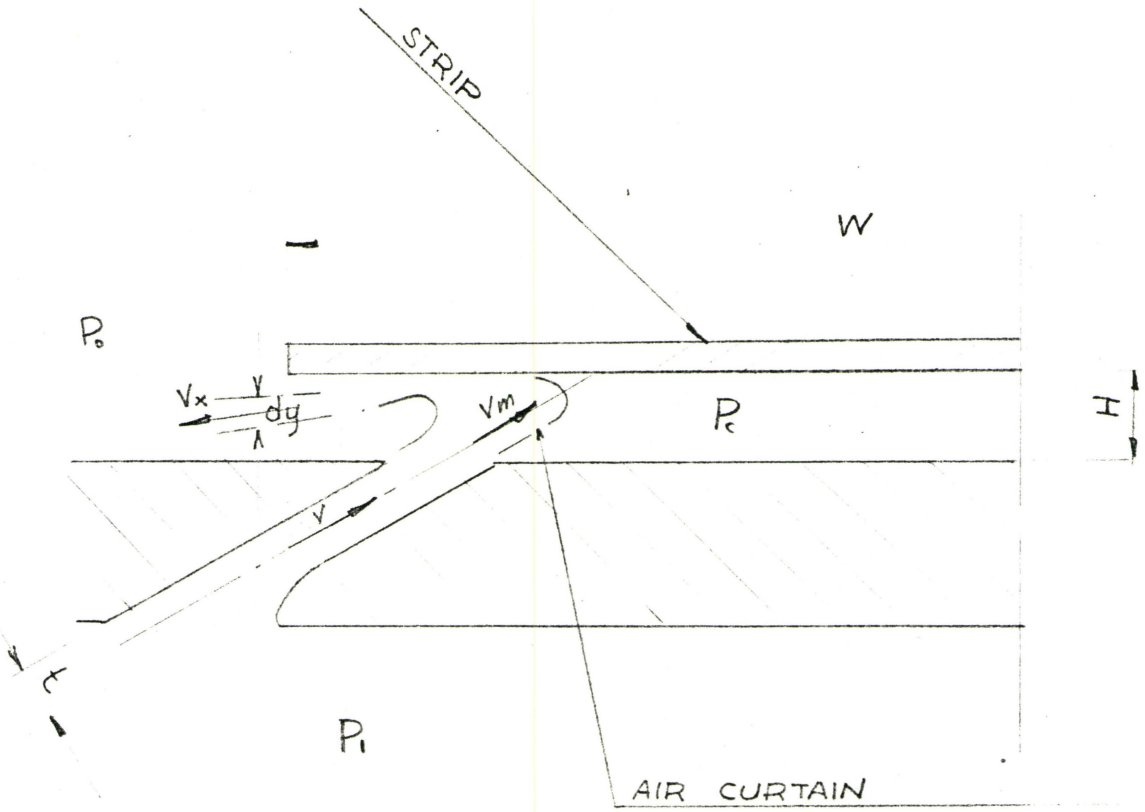

FIG. 22. SIMPLIFIED CONDITIONS AT FORMATION OF AIR CURTAIN

This diagrammatic representation of air curtain formation serves for basic derivation of air cushion formulae.

No consideration is given at this time to the flow split, friction losses and water presence.

8.1 Purpose of the Experiment

Although there is a considerable volume of literature on the technicalities of hovercraft principles, only a small portion of it is available. The working devices using air cushion principles are still in a state of experimentation and design is an art combined with technical knowledge.

Experiments can be used to verify relationships which have been derived theoretically. A theoretical approach to a problem always involves the making of assumptions, some of which may not be valid in practice, and some may be applicable only in certain ranges. Experiments are therefore required to determine any modifications to a theoretical law needed to make it usable in actuality - and this is author's main concern.

8.2 Description of the Experimental Equipment

The predominant aim in designing the apparatus should be simplicity. Author"s first intention was using plenum chamber principle.The equipment was built using that principle.

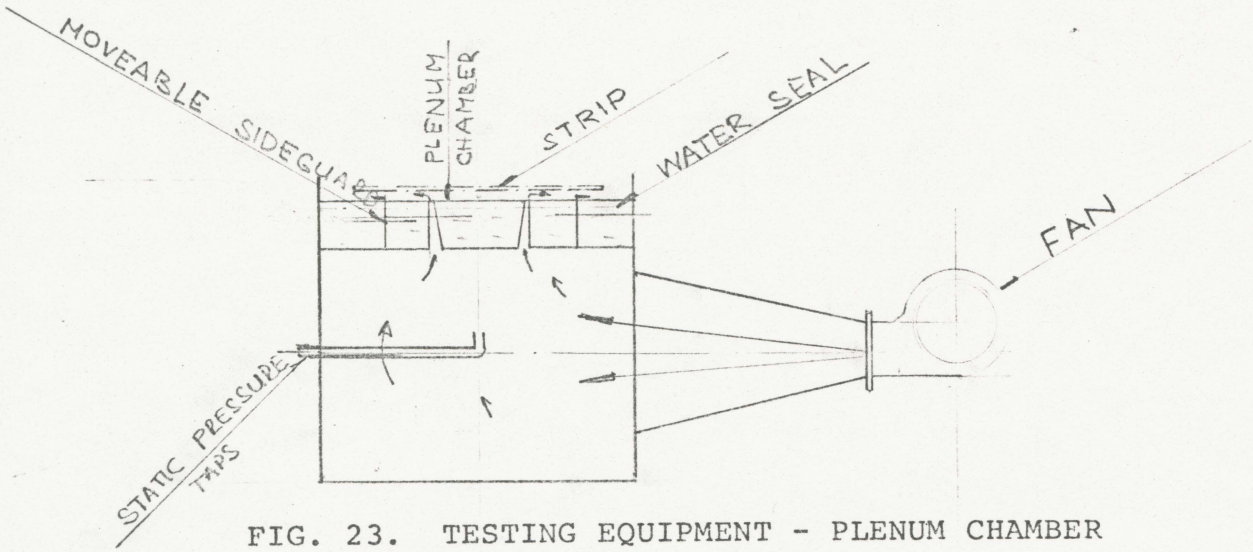

FIG. 23. TESTING EQUIPMENT - PLENUM CHAMBER

As shown in figure 23 a motor-driven centrifugal blower is attached to the plenum chamber with an interconnecting transition section. The plenum chamber is designed with a relatively large cross-sectional area in order to insure a uniform pressure. The plenum chamber is 120 in. long.

Two slots at the upper part of the chambers enable the air to get under the strip and form air cushion.

Because of a very small lift (about 0.01 in.),the plenum chamber principle was

---

* Static pressure taps are located along the chamber length.

abandoned and the author decided to re-design and rebuild the equipment.

The peripheral jet principle seems to be superior to the plenum chamber principle. It was necessary to make a new top part of the equipment where two pairs of air nozzles are located. The inner nozzles were used for narrower strips in order to obtain more data. The testing equipment is shown in Figure 24 and Drawing ME-1.

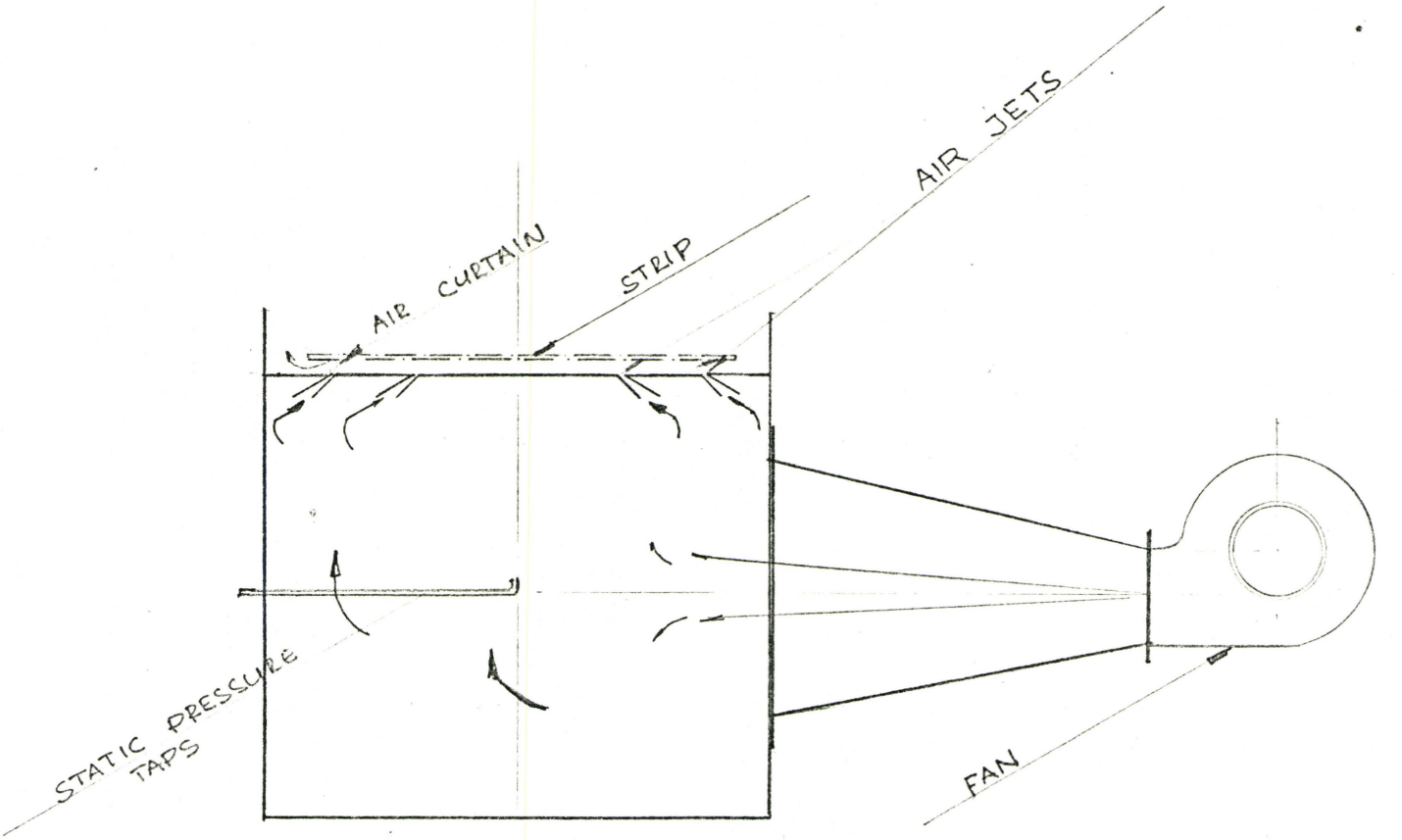

FIG. 24. TESTING EQUIPMENT - PERIPHERAL JETS

8.3 Performance of an Experiment

Experiments were made with thin galvanized cold rolled sheets of three different gauges and two widths.

Exhibit A shows experimental and calculated data for Test No. 5. The results of all tests are shown in Tables 4 and 5.

Exhibit A

Test No. 5

1) Strip Dimensions

Gauge: 0.0209 in.
Width: 9 in.
Length: 60 in.

2) Air Cushion Nomenclature

Pc	- air cushion pressure	lb/ft^2
H	- gap between the table base and the strip	In.
Po	- atmospheric pressure	lb/ft^2
P_1	- air pressure in the chamber	lb/ft^2
t	- jet thickness	In.
V	- air velocity at the jet exit	FPM
W	- strip width	In.
G	- strip gauge	In.
W_N	- jet separation	In.
δ	- jet angle	Radius
HPair	- air horsepower	HP
Q	- air flow rate	lb^3/min
ρ	- air density	lb/ft^3
ψ	- coefficient of nozzle losses	--

Data

$t = 0.1$ in.
$W = 9$ in.
$G = 0.0209$ in.
$W_N = 6$ in.
$\delta^N = 30°$
$\rho = 0.075$ lb/ft^3
$\psi = 0.7$
$L = 60$ in.

Experimental Data:

Air pressure observed at the plenum chamber

$P_1 = 0.5$ inches water gauge

Air cushion pressure

$Pc = 0.25$ inches water pressure

Gap between the table base and strip

$H = 0.15$ inches

Calculated Data:

Air supported area As.

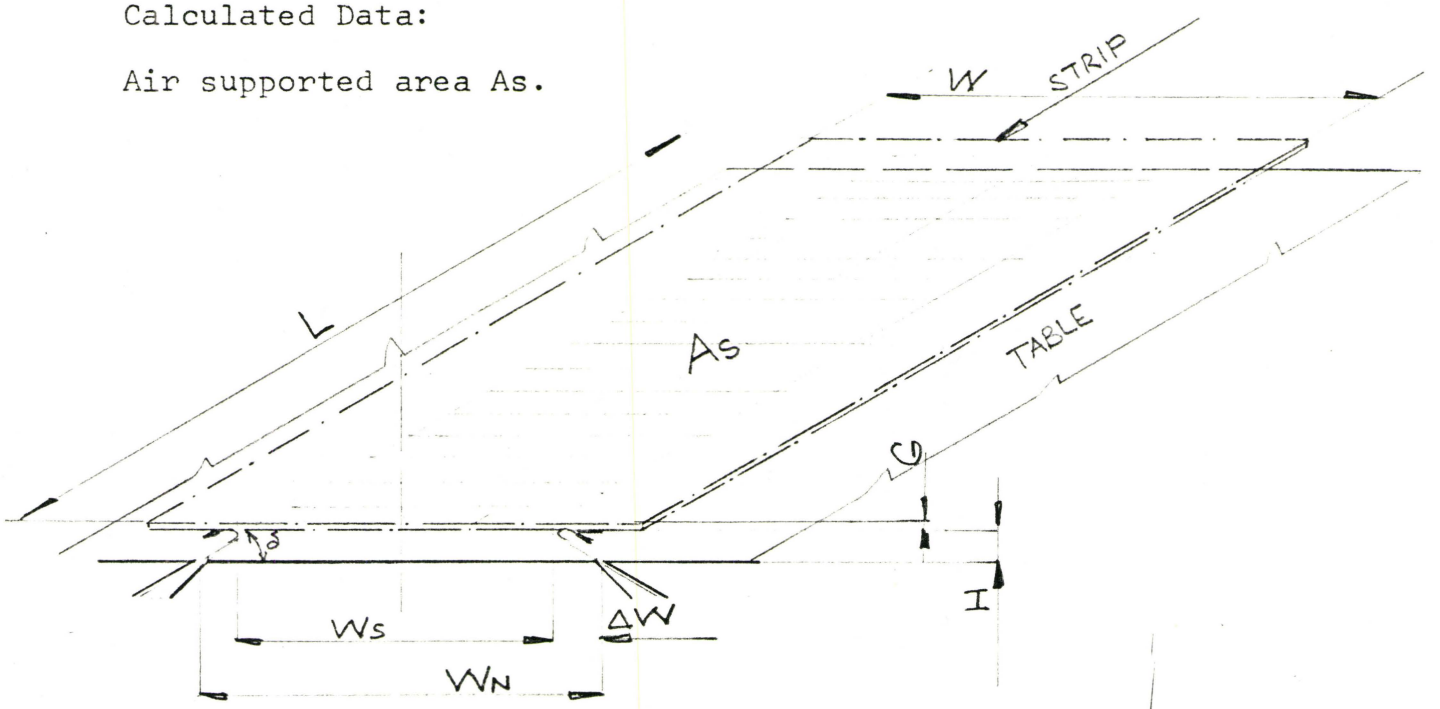

FIG. 27. AIR SUPPORTED AREA

$$\Delta W = \frac{0.15}{0.5774} = 0.26 \text{ in.}$$

$$Ws = W_N - 2\ \Delta W \tag{31}$$

$$= 6 - 0.52$$

$$\underline{Ws = 5.48 \text{ in.}}$$

$$As = Ws\ x_2 \times L$$

$$\underline{As = 330 \text{ in}^2 = 2.30 \text{ ft}^2}$$

Strip Weight:

$$\underline{WGHT = 3.20 \text{ lbs.}}$$

Required Air Cushion Pressure:

$$Pc = \frac{WGHT}{As} \tag{33}$$

$$= \frac{3.20}{2.30}$$

$$\underline{Pc = 1.39 \text{ lbs/ft}^2}$$

Corresponding air volume from fan characteristics Q = 129 CFM @ 0.5 inch water gauge. See Fig. 28.

Air velocity at the jet exit.

$$V = \frac{Q}{t \times L} \tag{6}$$

$$V = \frac{129}{2 \times 0.1 \times 60} \times 144 = 1{,}550 \text{ ft/min}$$

$$\underline{V = 26 \text{ ft/sec}}$$

$\frac{t}{H}$ Ratio: (7)

$$\frac{t}{H} = \frac{0.1}{0.15} = 0.67 \tag{7}$$

$$\underline{\left[\frac{t}{H} + \cos\delta\right] \text{expression}}$$

$$\frac{t}{H} + \cos\delta = 1.536 \tag{8}$$

Theoretical air cushion pressure PcT (calculated from observed figures)

$$PcT = \rho V^2 \frac{t}{H}\left[\left(\frac{t}{H} + \cos\delta\right)\right] \tag{5}$$

$$PcT = \frac{0.075}{32.2} \times 675 \times 0.67 \times 1.536$$

$$\underline{PcT = 1.620 \text{ lbs/ft}^2}$$

The higher calculated pressure is attributed to the losses between strip and table where the area is not enclosed by the air jets.

Total pressure rise across the fan:

$$P_T = Pc + \left[(1 + \psi)\frac{\rho V^2}{2}\right] \tag{9}$$

$$= 1.39 + \left[(1.7)\frac{0.075}{32.2} \times 26.0\right]$$

$$\underline{P_T = 2.7 \text{ lb/ft}^2}$$

Air horsepower:

$$\text{HP air} = \frac{P_T \times Q}{33{,}000} \tag{36}$$

$$\text{HP air} = \frac{2.7 \times 129}{33{,}000} = \underline{0.0106 \text{ HP}}$$

TABLE 4. EXPERIMENTAL DATA I

Test	Air Cushion Pressure Pc (lb/ft^2)	Calculated Values			
		Air Velocity V (FPS)	Air Volume Q (CFM)	Total Air Pressure P_T (lb/ft^2)	Air Horsepower HPair (HP)
1	2.33	23	116	3.34	0.0118
2	1.89	24.8	121	3.10	0.0114
3	1.86	24.5	122	3.01	0.0111
4	1.58	25.1	125	2.80	0.0106
5	1.36	26.0	129	2.7	0.0106
6	1.11	26.6	131	2.47	0.0098

TABLE 5. EXPERIMENTAL DATA II

Test	Gauge No.	Thickness (In.)	Weight (Lbs.)	Measured Values				
				Gap H (In.)	Pressure P_1		Pressure Pc	
					(In. W.G.)	(Lb/Ft^2)	(In. W.G.)	(Lb/Ft^2)
1	20	0.0359	5.503	0.1	0.9	4.66	0.45	2.33
2	20	0.0359	9.176	0.12	0.73	3.79	0.36	1.89
3	22	0.0299	4.585	0.12	0.72	3.74	0.36	1.86
4	22	0.0299	7.642	0.13	0.61	3.16	0.30	1.58
5	25	0.0209	3.205	0.15	0.50	2.59	0.26	1.36
6	25	0.0209	5.34	0.15	0.43	2.23	0.21	1.11

8.4 Results

Results obtained are shown in tabular form in Tables 4 and 5.

Measured values correspond rather well with the calculated ones and the air cushion theory used may serve also for the calculation of an air cushion for industrial applications.

8.5. Conclusion

Obtained results give good guide lines for calculation and design of strip runout tables. Though not accurately manufactured, testing equipment was a good help in final conclusions for the type of air cushion for this particular application.

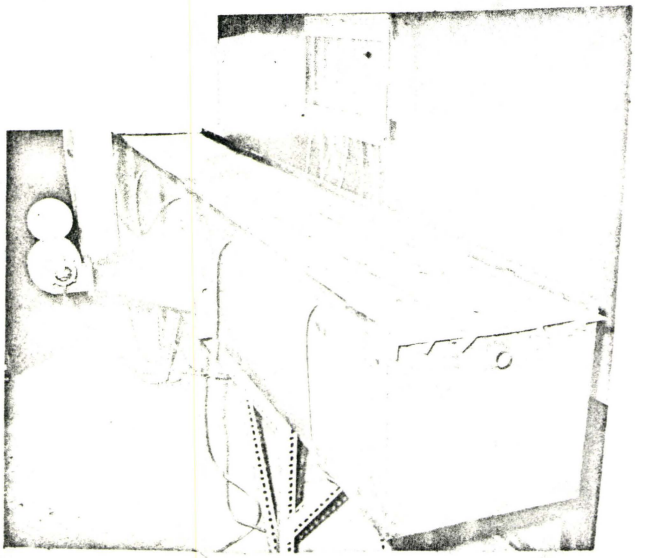

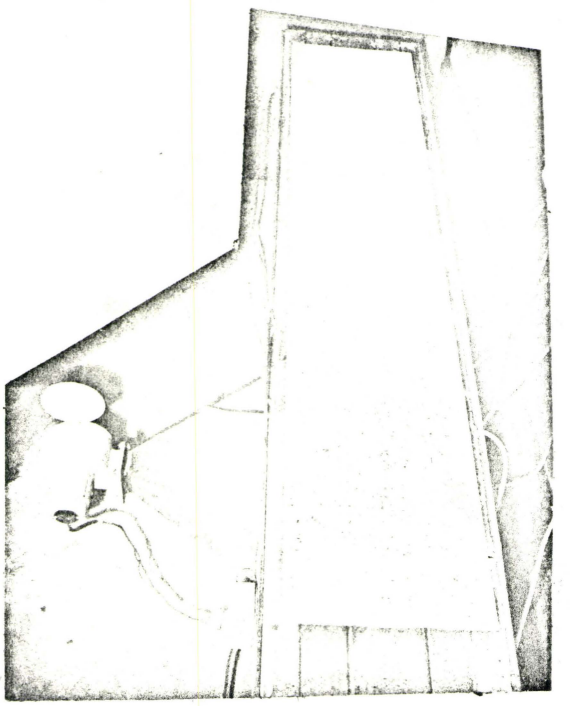

FIGS. 25 & 26 EXPERIMENTAL SET-UP

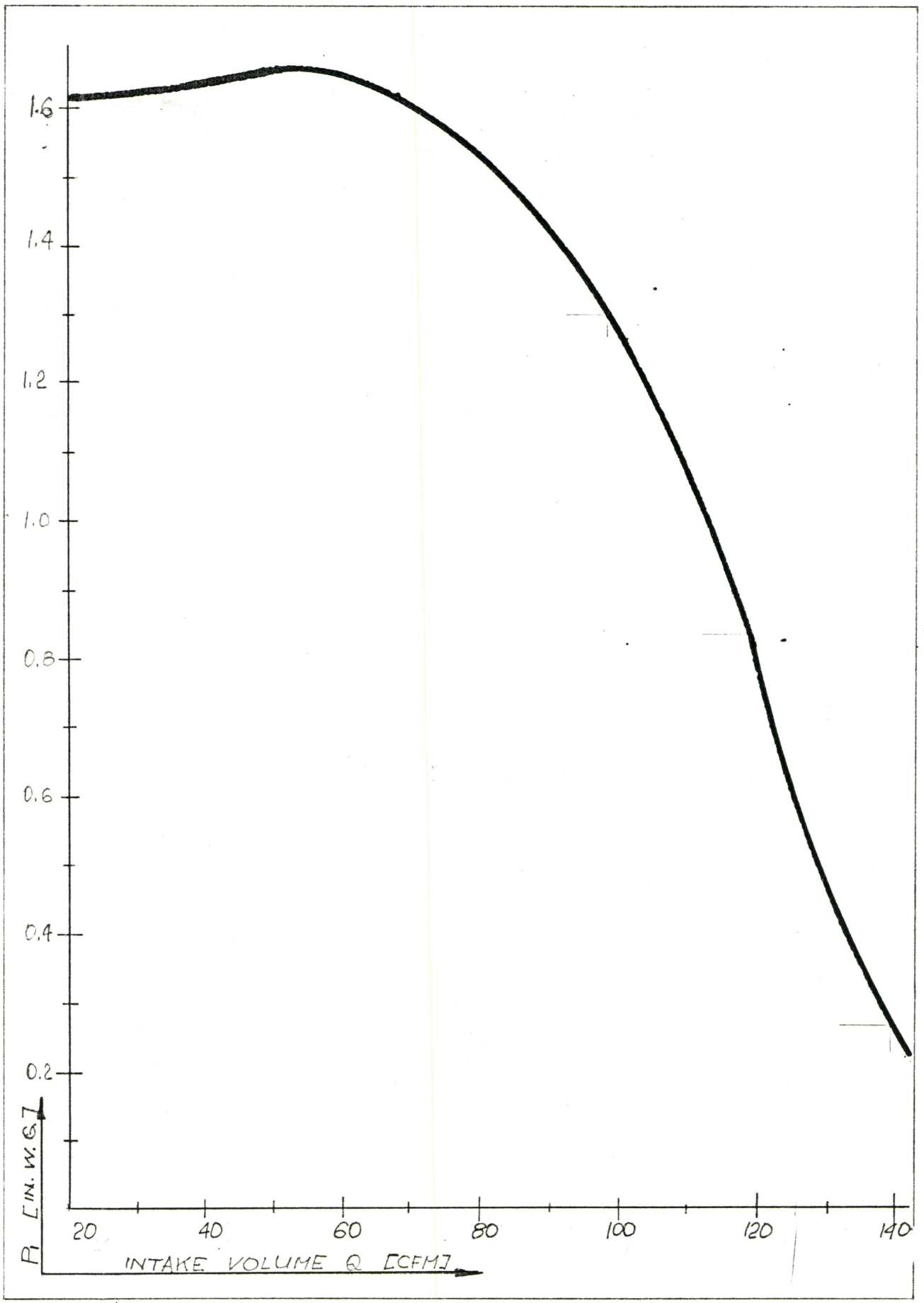

FIG. 28. 4-1/4 in DIA. CENTRIFUGAL FAN CHARACTERISTIC

9.0 The Cooling of Hot Strip

The desired coiling temperature Tc is a function of finishing temperature Tf,rolling speed Vs and strip gauge.

The cooling on run-out table consists of three sections.

Section I - between last stand and water cooling section - L1

Section II - water cooling section - L2

Section III - between water cooling section and coiler. Section L3

The length of each section varies according to the cooling requirements. A whole spectrum of cooling rates are possible between the finishing and coiling temperature. The physical properties of the steel will be different if there is a different way of cooling the strip.

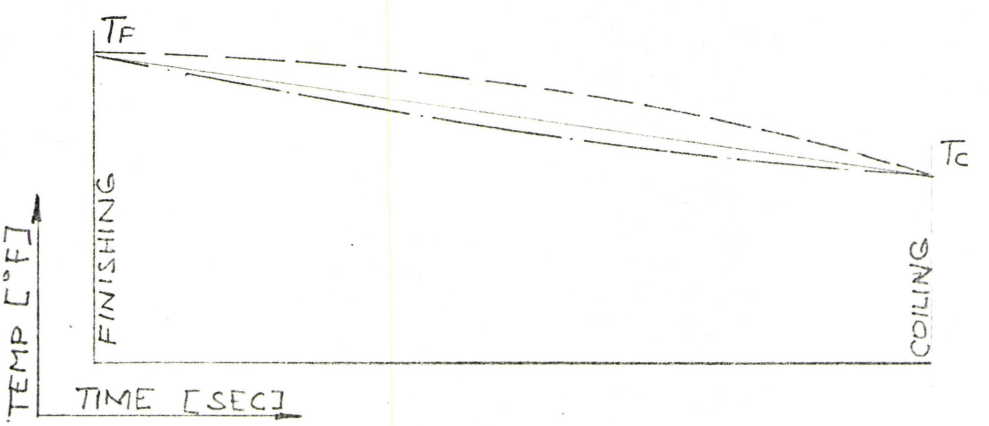

FIG. 29. DIFFERENT WAYS OF COOLING

Cooling in the sections I and III is by radiation -- there is no water contact with the strip surface.

Cooling in the section II is by radiation and convection.

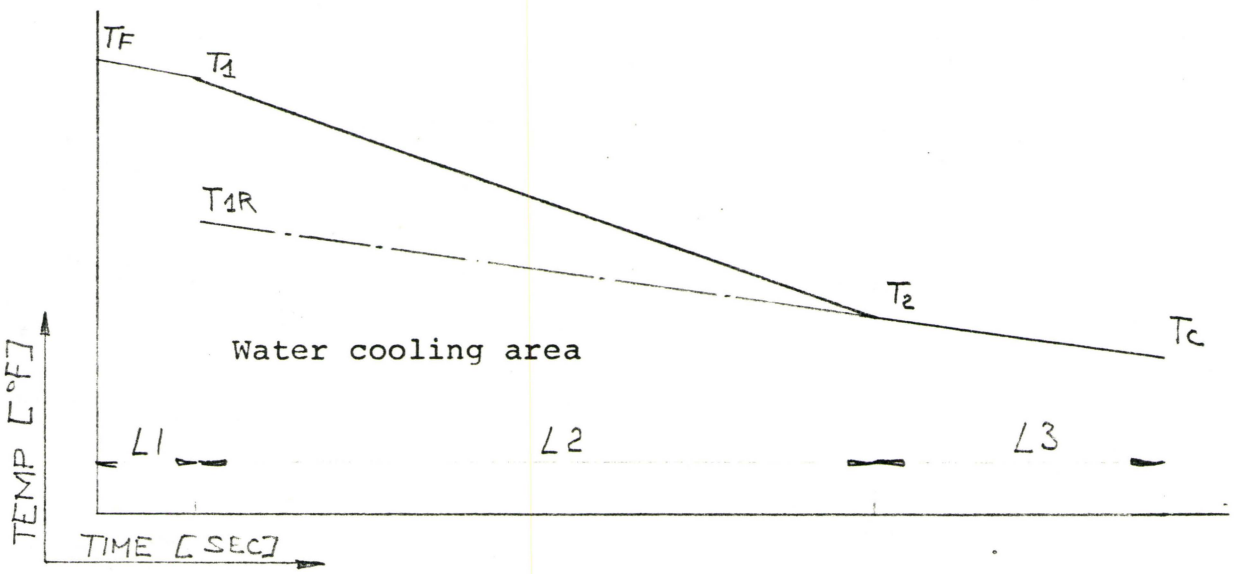

FIG. 30. THE COOLING OF STRIP ON RUNOUT TABLE

Section 1

Neglecting the temperature gradients through the thickness of the strip the basic equation of radiation heat flow is:

$$2E\sigma T^4 dt = \rho c G dT \tag{10}$$

Time for cooling in zone I

$$t_1 = \frac{L1}{Vs} \tag{11}$$

$$t_1 = \int_{T_1}^{T_F} \frac{\rho \; c \; G \; dT}{2E \; \sigma \; T^4} \tag{12}$$

After integration and re-arrangement the temperature at the end of section I is:

$$T1 = \frac{T_F}{\left(1 + \frac{6 \sigma \; E \; L_1 \; T_F^3}{Vs \; \rho \; c \; G}\right)^{1/3}} \tag{13}$$

Assuming that the required temperature Tc would be realized only by radiation, the strip temperature at the beginning of second section should have been Tlr.

To achieve the required coiling temperature Tc, a quantity of heat must be removed from the strip surface corresponding to the temperature difference Tl - Tlr.

In the same manner as for cooling zone I.

$$t_{23} = \int_{Tlr}^{Tc} \frac{\rho \; c \; G \; dT}{2 \; E \; \sigma \; T^4} \tag{14}$$

and also

$$t_{23} = \frac{L_2 + L_3}{Vs} \tag{15}$$

$$T_{lr} = \frac{Tc}{\left[1 - \frac{G\,\sigma\,E\,(L_2 + L_3)\,Tc^3}{Vs\,\rho\,c\,G}\right]^{1/3}} \tag{16}$$

$$T_1 - T_{lr} = \frac{T_F}{\left[1 + \frac{G\,\sigma\,E\,L_1\,T_F^3}{\rho\,c\,G\,Vs}\right]^{1/3}} - \frac{Tc}{\left[1 - \frac{G\,\sigma\,E\,(L_2 + L_3)\,Tc^3}{\rho\,c\,G\,Vs}\right]^{1/3}} \tag{17}$$

Various types of water sprays are used to cool strip prior to coiling. The quantities of water used for removing the amount of heat from strip are disproportionate.

In 1957 BISRA[17] developed the concept of cooling hot steel strip with water jets. This type of cooling is now being used on almost all new installed Hot Strip Mills. However, the water jet system has been applied only for cooling the top surface.

For cooling of the bottom surface pressure sprays are being still used.

In order to get uniform mechanical properties across the strip thickness and width author suggests using "continuous water jets" for both top and bottom surface (Figure 32). This pattern provides symmetrical cooling and ensures homogeneous grain structure of the strip. Continuous water jets are in comparison with laminar jets more efficient and simple.

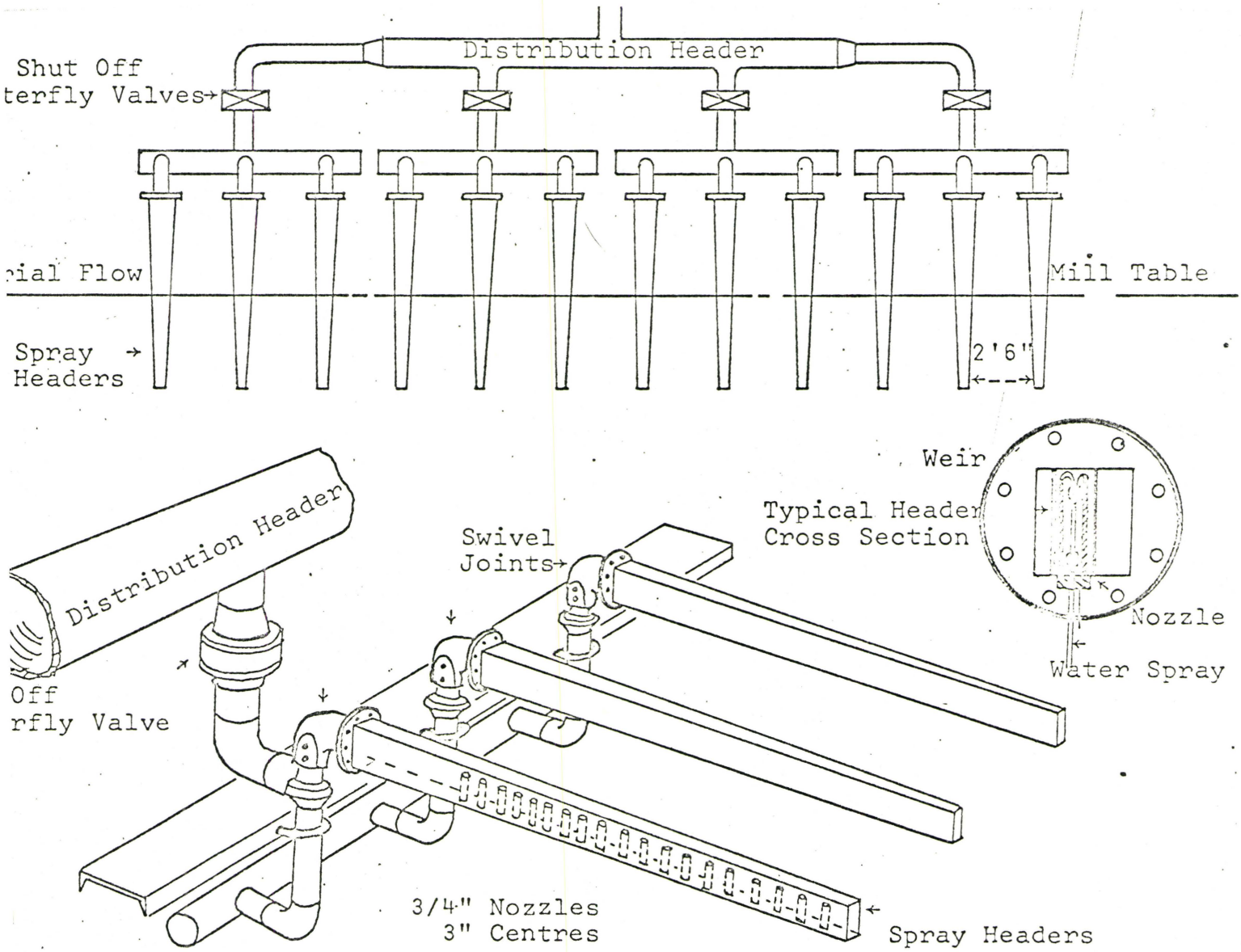

FIG. 31. LAMINAR WATER JETS

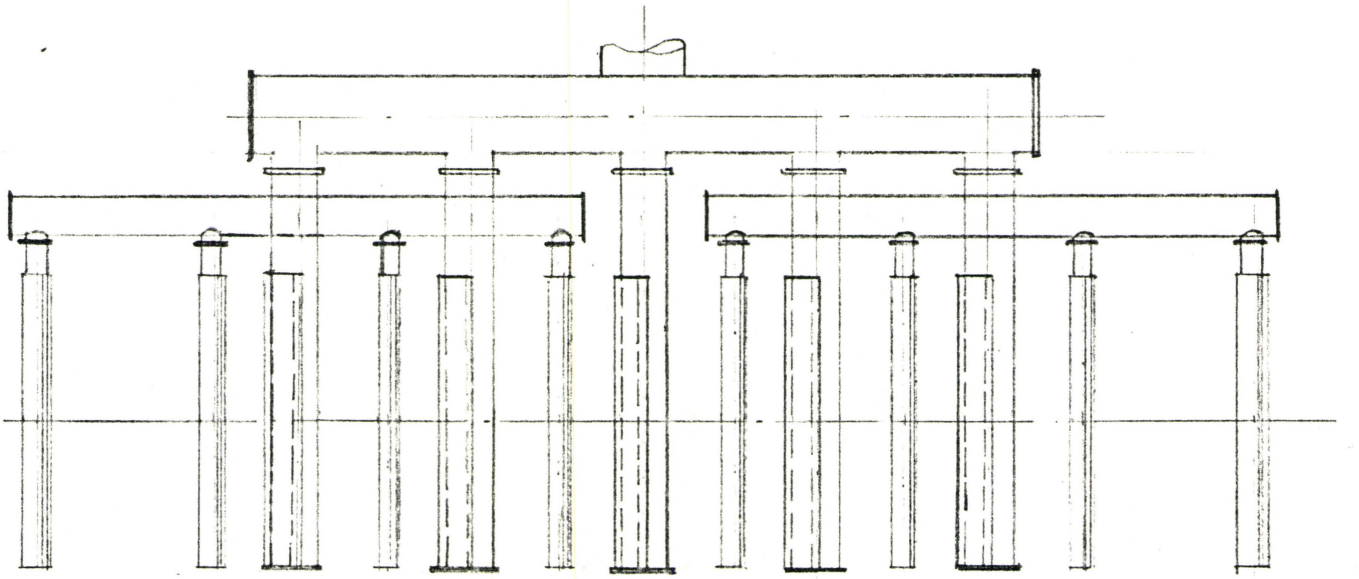

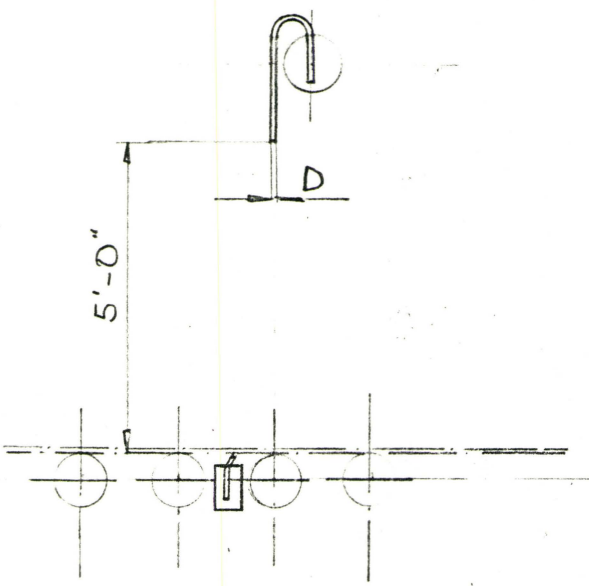

FIG. 32. CONTINUOUS WATER JETS

9.1 Theory of "Continuous Water Jets" Cooling

This theory is very similar to that developed by BISRA for laminar jet cooling. The heat transfer from a semi-infinite body, initially at a temperature T^1 and instantaneously cooled at its surface to T^{11} is equal to

$$q = k(T^1 - T^{11})\ (\pi\ kt)^{-1/2} \tag{18}$$

If the thickness of the jet is D, then the heat Q removed from an area A,

$$A = D \times W \tag{19}$$

during a time interval t is given by

$$Q = D \times W \int_0^t q\ dt \tag{20}$$

$$Q = D \times W \int_0^t k(T^1 - T^{11})\ (\pi\ Kt)^{-1/2}\ dt \tag{21}$$

$$Q = D \times W \times k \times (T^1 - T^{11})\ \left(\frac{t}{\pi K}\right)^{1/2} \tag{22}$$

The cooling duration t of strip (while the strip element is in contact with water jet) at speed Vs and length D is given by

$$t = \frac{D}{Vs} \tag{23}$$

Therefore the heat removed from the strip element by one continuous water jet is given by;

$$Q = D \times W \times k \times (T^{1} - T^{11}) \left(\frac{D}{Vs \times \pi \times K} \right)^{1/2} \tag{24}$$

The number of sprays along the strip length required to reduce the temperature from T_1 to T1r is expressed by the following equation.

$$N_R \times D \times W \times k \, (T^{1} - T^{11}) \left(\frac{D}{Vs \times \pi \times K} \right)^{1/2} = H \tag{25}$$

$$H = \rho \times c \times G \times W \times D \times (T_1 - T1r) \tag{26}$$

Mean temperature during cooling may be expressed as

$$Tm = \frac{T_1 + T1r}{2} \tag{27}$$

and the water temperature T^{11} can be neglected and

$$T^{1} = Tm = \frac{T_1 + T1r}{2} \tag{28}$$

therefore

$$Q = 2 \times D \times W \times k \, (T_1 + T1r) \tag{29}$$

and equation for number of continuous water jets in final form is

$$Ne = \frac{H}{Q} \tag{30}$$

10.0 Calculation of Air Cushion for Typical Hot Strip Mill Product

The runout table is divided into three sections of which the last, section III, is using an air cushion for carrying the strip to the coilers. It covers 150 ft. and is located between the last roller of section II and pinch rolls at the entry to the coiler. From manufacturing point of view section III is divided into 12 subsections.

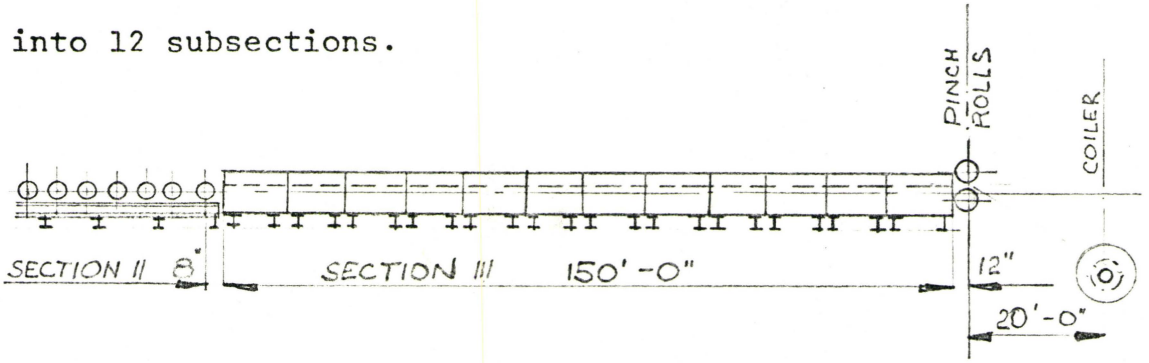

Strip dimensions:

Gauge: 0.100 in.
Width: 50.00 in.

Exhibit B

a/Nomenclature

Pc	Air cushion pressure	lb/ft^2
H	Gap between the table and the strip	in.
Po	Atmosphere pressure	lb/ft^2
P_1	Air pressure in chamber	lb/ft^2
t	Jet thickness	in.
v	Air velocity at the jet exit	ft/min
W	Strip width	in.
G	Strip thickness	in.
Ws	Air cushion width	in.
As	Air supported area	ft^2
Wn	Jet separation	in.
δ	Jet angle	radians
HP air	Air horsepower	HP
ρ	Air density	lb/ft^2
Q	Air flow rate	ft^3/min

	Steel density	lb/ft^3
WGHT	Strip weight along the subsections	lb
ψ	Coefficient of nozzle losses	-

b/Data

H = 0.50 in.
t = 0.125 in.
W = 50.00 in.
G = 0.100 in.
Wn = 38.00 in.
δ = 30°
ρ = 0.075 lb/ft^3
ψ = 0.70
L = 150.00 in.

c/Calculation of Required Air Cushion Pressure

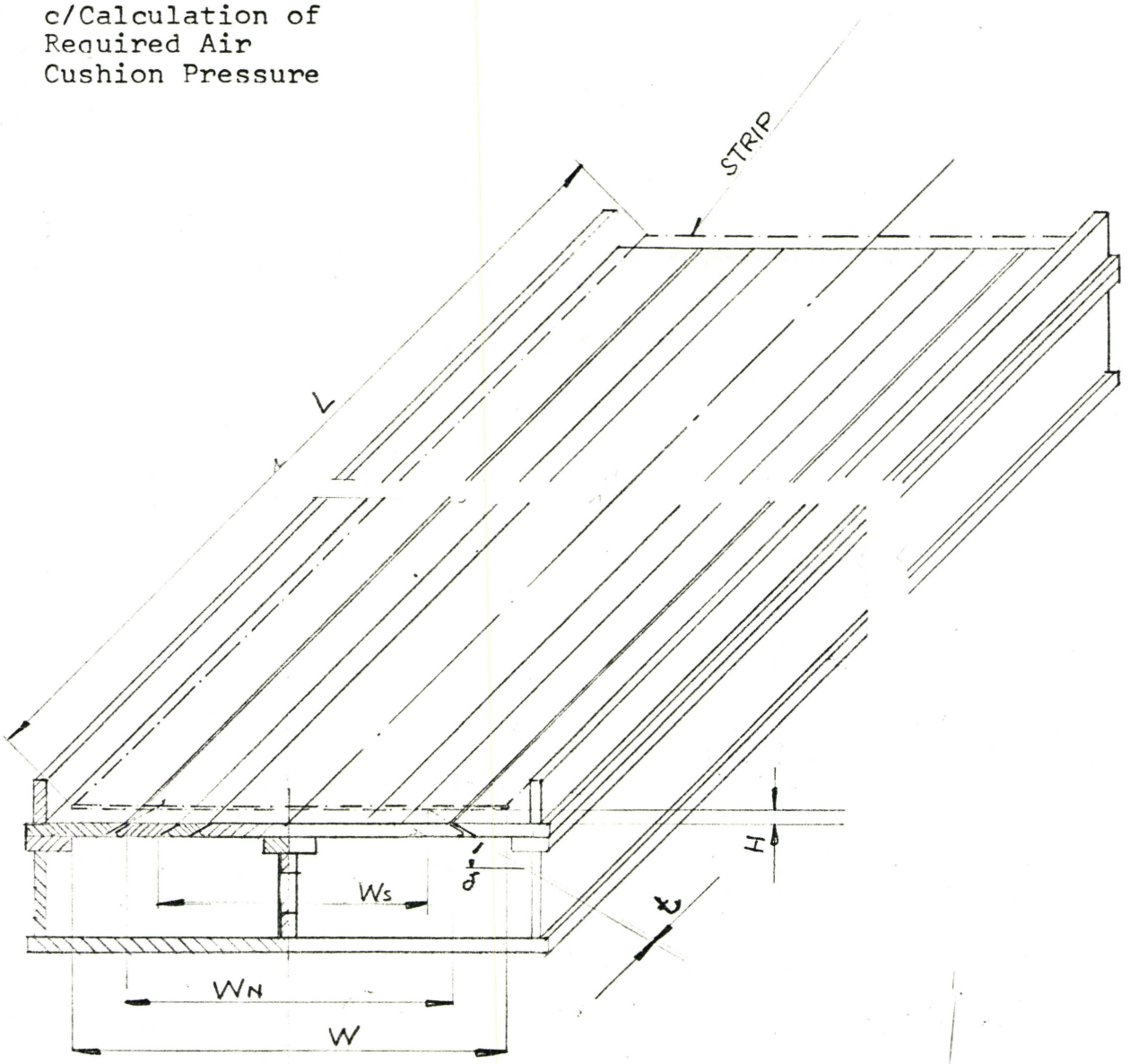

FIG. 33. SKETCH ILLUSTRATING RUNOUT TABLE SUBSECTION

Strip Weight:

$$WGHT = L \times W \times G \times \rho_s \tag{35}$$
$$= 150.00 \times 50.00 \times 0.100 \times 0.283$$
$$\underline{WGHT = 212.25 \text{ lbs.}}$$

Air Supported Area:

For dimensions see Fig. 33.

$$Ws = Wn - 2 \times \frac{H}{tg\,\varphi_s} \tag{31}$$

$$= 38 - 2 \times \frac{0.500}{0.5774}$$

$$\underline{Ws = 36.268 \text{ in.}}$$

$$As = L \times Ws$$

$$= \frac{150.00 \times 36.268}{144} \tag{32}$$

$$\underline{As = 37.779 \text{ ft}^2}$$

Air Cushion Pressure:

$$Pc = \frac{WGHT}{As} \tag{33}$$

$$= \frac{212.25}{37.779}$$

$$\underline{Pc = 5.63 \text{ lb/ft}^2}$$

Air Velocity Through
the Nozzles:

$$v = \left[\frac{Pc \times H}{\rho \times t \times (\frac{t}{H} + \cos\delta)} \right]^{\frac{1}{2}} \tag{5}$$

$$= \left[\frac{5.63 \times \frac{0.5}{12}}{\frac{0.075}{32.2} \times \frac{0.125}{12} \quad \frac{0.125}{0.500} + \cos 30°} \right]^{\frac{1}{2}}$$

$\underline{v = 5585.7 \text{ ft/min.}}$

Air Flow Rate:

$$Q = 2\ (t \times L) \times v$$

$$= 2 \left(\frac{0.125 \times 150.00}{144} \right) \times 5585.7 \tag{34}$$

$\underline{Q = 1454.6 \text{ ft}^3\text{/min.}}$

Total Pressure Rise
Across the Fan:

$$PT = Pc + (1 + \psi)\ \frac{\rho v^2}{2} \tag{9}$$

$$= 5.63\ (1 + 0.7)\ \frac{0.075}{32.2} \times \left(\frac{5585.7}{60} \right)^2 \times 1/2$$

$\underline{PT = 22.78 \text{ lb/ft}^2}$

Air Horsepower for
One Subsection:

$$HP\ air = \frac{PT \times Q}{33{,}000} \tag{36}$$

$$= \frac{22.78 \times 1454.6}{33{,}000}$$

$$\underline{HP\ air = 1.004\ HP}$$

Air Horsepower for
the Section III:

$$HPT\ air = HP\ air \times \text{Number of subsections} \tag{37}$$

$$= 1.004 \times 12$$

$$\underline{HPT\ air = 12.05\ HP}$$

d/ Deceleration Force

It is a resistance of air to strip movement.

$$D_f = \frac{0.074}{Rex^{1/5}} \times 1/2 \times \rho \times Vs^2 \times As \tag{38}$$

$$\underline{D_f = 0.1526 \quad lb}$$

Reynolds number

$$Rex = \frac{\rho \times Vs \times X}{\mu} \tag{39}$$

Calculation of deceleration force, boundary layer
thickness shown in computer run.

Critical Force

The buckling of the strip occurs when the deceleration force is equal or greater than critical force Pcr.

$$Pcr = \frac{\pi^2 \times E \times I}{X^2_e} \tag{40}$$

$$\underline{Pcr = 0.3548 \text{ lb.}}$$

Calculation of critical force shown in computer run together with the deceleration force.

11.0 Calculation of Strip Cooling for Typical Hot Strip Mill Product

For Time-Temperature diagrams see Figures 37 and 39.

Fig. 39 shows the strip cooling in TTT diagram at different rolling speeds and cooling rates. It results in different final grain structure.

Finishing mill reduces the rolling stock thickness continuously in each of its 6 stands. The strip is delivered on the runout table to the coiler, where the strip is coiled.

Slab Dimensions:

Thickness:	7.50	in
Width:	51.00	in
Length:	216.00	in
Weight:	22,310	lbs

Strip Dimensions:

Gauge:	0.100	in
Width:	50.00	in

a/Nomenclature:

TF	Finishing strip temperature	°F
T_1	Strip temperature at the end of section I	°F
T_{1r}	Hypothetical strip temperature at the end of section II	°F
T_2	Strip temperature at the end of section II	°F
T_c	Strip coiling temperature	°F
G	Strip gauge	in

Vs	Strip velocity	FPM
L_1	Length of the section I	ft
L_2	Length of the section II	ft
L_3	Length of the section III	ft
σ	Stephan-Boltzman constant	BTU/sec,ft^2,R^9
E	Emissivity coefficient of steel strip	-
ρ	Specific density of steel	lb/ft^3
C	Specific heat of steel	BTU/lb°F
t_1	Time needed for strip to pass section I	sec
t_{23}	Time needed for strip to pass section II and III	sec
D	Water jet thickness	in
K	Thermal diffusivity of steel	ft^2/sec
k	Thermal conductivity of steel	BTU/sec,ft,°F
N_R	Number of jets required	-
t^R	The cooling duration of strip element	sec

b/Data:

T_F = 1,600°F
T_C = 1,000°F
G = 0.10 in
Vs_1 = 1,425 FPM
Vs_2 = 2,850 FPM
L_1 = 20 ft
L_2 = 300 ft
L_3 = 150 ft
σ = 4.75×10^{-13}
E = 0.9
ρ = 490 lbs/ft^3
C = 0.15
D = 0.75 in
K = 8.079×10^{-5} ft^2/sec
k = 3.333×10^{-3} BTU/sec,ft,°F
w = 50.00 in

c/Time for Cooling in Section I

$$t_1 = \frac{L_1}{Vs_1} \qquad (11)$$

$$t_1 = \frac{20.00}{1425.00} \times 60.00 \quad \text{(Sec.)}$$

$$\underline{t_1 = 0.842 \text{ Sec.}}$$

For speed, Vs_2 time t_1 = 0.421 Sec.

d/Temperature at the
End of Section I

Due to radiation the temperature of the strip drops from T_F to T_1.

$$T_1 = \frac{T_F}{\left(1 + \frac{6\sigma E T_F^3}{\rho x C x G} \times t_1\right)^{1/3}} \qquad (13)$$

$$T_1 = \frac{(1600.00 + 460.00)}{\left(1 + \frac{6 \times 4.75 \times 10^{-13} \times 0.9 \times (2060)^3}{490.00 \times 0.15 \times \frac{0.100}{12.0}} \; 0.842\right)^{1/3}} \quad (°R)$$

T_1 = 2057.90°R
$\underline{T_1 = 1597.90°F}$

For speed Vs_2 temperature $\underline{T1 = 1598.90°F}$

e/Time for Cooling
in Sections II and III

$$t_{23} = \frac{L_{II} + L_{III}}{Vs_1} \qquad (15)$$

$$t_{23} = \frac{300.00 + 150.00}{1425.} \times 60.00 \quad \text{(Sec.)}$$

$$\underline{t_{23} = 18.947 \text{ Sec.}}$$

For speed Vs_2 $\underline{t_{23} = 9.473 \text{ Sec.}}$

f/Hypothetical
Temperature T_{IR}

$$T_{IR} = \frac{Tc}{\left(1 - \frac{6\sigma E\, Tc^3}{\rho CG} \times t_{23}\right)^{1/3}} \qquad (16)$$

$$T_{IR} = \frac{(1000.00 + 460.00)}{\left(1 - \frac{6 \times 4.75 \times 10^{-13} \times 0.9}{490.00 \times 0.15 \times \frac{0.100}{12.00}} \times 18.947\right)^{1/3}} \quad (°R)$$

$$T_{IR} = 1472.20°R$$
$$\underline{T_{IR} = 1012.20°F}$$

For speed Vs_2 the temperature $T_{IR} = 1466.10°R$
$T_{IR} = 1006.10°F$

g/Heat Removed by One
Top Continuous Water Jet

$$Q = (T_1 + T_{IR})\ W \times D \times k \times \left(\frac{D}{Vs \times \pi \times K}\right)^{1/2} \qquad (24)$$

$$Q = (2057.90 + 1472.20) \times \frac{50.00}{12.00} \times \frac{0.75}{12.00} \times 3.333 \times 10^{-3}$$

$$\times \left(\frac{\frac{0.75}{12.00}}{\frac{1925}{60} \times \pi \times 8.071 \times 10^{-5}}\right) \quad \text{(BTU)}$$

$\underline{Q = 10.255 \text{ BTU}}$

For Vs_2 $\underline{Q = 7.241 \text{ BTU}}$

h/Total Heat to be Removed
From the Strip Element in
Order to Reach Temperature T_{IR}

$$H = (T_1 - T_{IR})\ \rho \times C \times W \times D \times G \qquad (26)$$

$$H = (2057.90 - 1472.20) \times 490.00 \times 0.15 \times \frac{50.00}{12.00}$$

$$\times \frac{0.75}{12.00} \times \frac{0.100}{12.00} \quad \text{(BTU)}$$

$\underline{H = 97.08 \text{ BTU}}$

For Vs_2 total heat to be removed $\underline{H = 98.27 \text{ BTU}}$

i/ Theoretical Number of Continuous jets

$$NR = \frac{H}{Q} \tag{30}$$

$$NR = \frac{97.08}{10.25} = 9.465 \text{ continuous jets for rolling speed } V_{S1}$$

$$NR = 14 \text{ continuous jets for } V_{S2}$$

j/Water Quantity for
Top Cooling Jet

$$WOT = Ajt \times Vwt$$

Water Jet Area

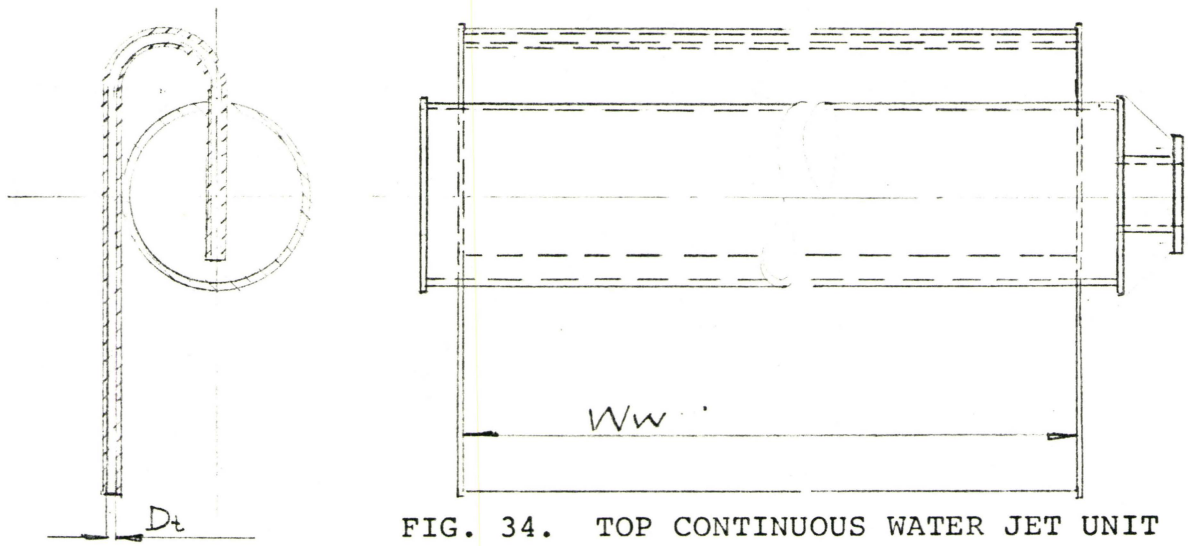

FIG. 34. TOP CONTINUOUS WATER JET UNIT

$$Ajt = Ww \times Dt \tag{41}$$

$$= \frac{54 \times 0.75}{144}$$

$$Ajt = 0.281 \ ft^2$$

Water velocity

$$Vwt = \sqrt{2gh_t} \tag{42}$$

ht water pressure at the end of the water nozzle = 6 In.

$$= \sqrt{2 \times 32.2 \times 1/2}$$

$$\underline{Vwt = 5.7 \ ft/sec}$$

Water quantity

$$WOF = Ajt \times Vwt \tag{43}$$

$$= 0.281 \times 5.7 \times 60$$

$$\underline{WOT = 96.01 \ ft^3/min/Jet}$$

$$\underline{WOT = 598.3 \ Gal/min/Jet}$$

k /Water Quantity for
Bottom Cooling Jet

$$WOB = Ajb \times Wwb \qquad (44)$$

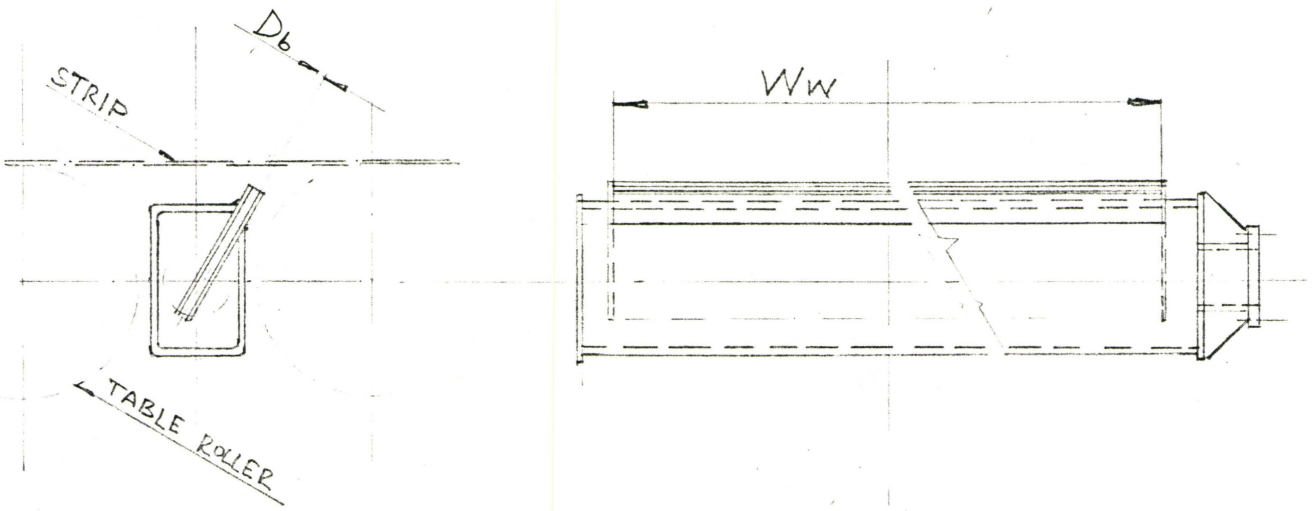

FIG. 35. BOTTOM CONTINUOUS WATER JET UNIT

$$Ajb = Ww \times Db \qquad (45)$$

$$= \frac{54 \times 0.5}{144}$$

$$\underline{Ajb = 0.188\ ft^2}$$

Water velocity

$$Vwb = \sqrt{2gh_b}$$

h_b - water pressure at the end of the water nozzle = 12 In. (46)

$$= \sqrt{2 \times 32.2 \times 1}$$

$$\underline{Vwb = 8.05\ ft/sec}$$

Water quantity

$$WOB = Ajb \times Vwb$$

$$= 0.188 \times 8.05 \times 60 \qquad (44)$$

$$\underline{WOB = 90.5\ ft^3/min.}$$

$$\underline{WOB = 564.0\ Gal/min.}$$

1/Water Requirements

Top Cooling

$$WRT = N_T \times WOT$$

$$= 5 \times 598.3$$

WRT = 2991.5 gal/min at pressure of 6 in. of water for strip speed Vs_1

WRT = 4188.1 gal/min at pressure of 12 in. of water for strip speed Vs_2

To provide symmetrical cooling both top and bottom nozzles have the same initial rate of heat extract However, the test on existing hot strip mill using laminar cooling (jet diameter 0.75 in.) have shown that the efficiency of cooling water for the bottom unit is roughly 1.5 times less than for the top. The same may apply to continuous water nozzles.

Thus, this results in a cooling effect of 5 top cool units and 8 bottom cooling units.

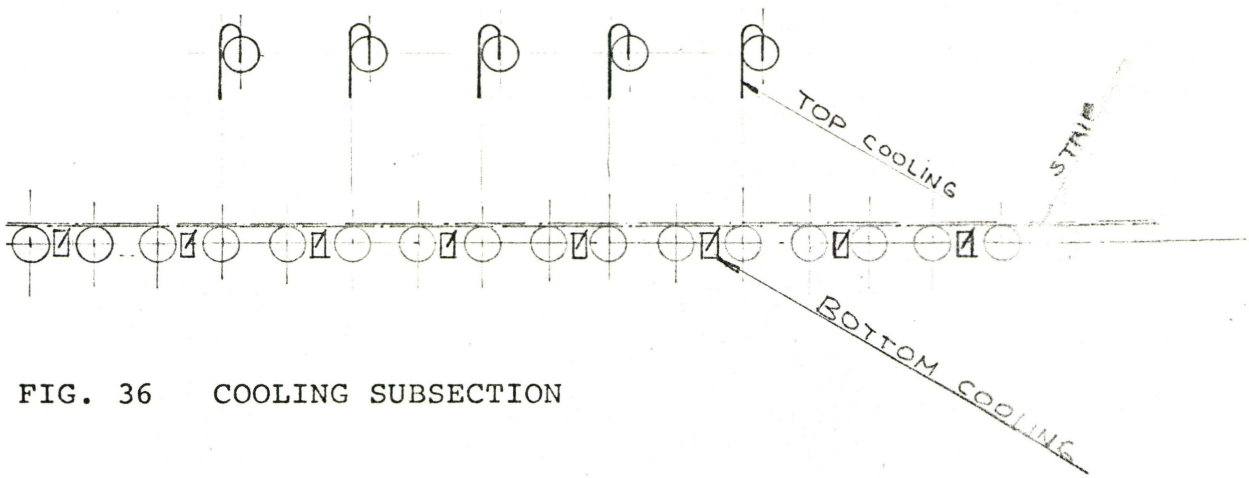

FIG. 36 COOLING SUBSECTION

Number of top continuous water jets:

$$N_T = \frac{N_R}{2} \qquad (48)$$

$$= \frac{10}{2}$$

N_T = 5 top continuous water jets for strip speed Vs_1

N_T = 7 top continuous water jets for strip speed Vs_2

Number of bottom continuous water jets.

$$N_B = \frac{N_R}{2.x\ 0.625} \tag{49}$$

$$= \frac{10}{1.25}$$

N_B = 8 bottom continuous water jets for strip speed Vs_1

N_B = 11 bottom continuous water jets for strip speed Vs_2.

12.0 Runout Table Design Application

Generally, runout table consists of three sections:

a) Section I - between stand G and the first cooling subsection. Width and thickness gauges are installed in the area.

b) Section II - cooling section which comprises subsections with top and bottom cooling units.

c) Section III - between the last cooling subsection and pinch rolls before the coiler.

Decisions should concern:

1) Length of the runout table - section I, II, and III.

2) Type and dimension of the cooling units.

3) The cooling water flow.

4) The number of sprays in a subsection.

5) The total number of sprays.

6) Control of the cooling process.

7) Type of the conveying system.

7a) The conventional roller table in section I and II.

Roller diameter
Roller spacing
Maximum speed
Drive

7b) Air cushioned table - section III.
Required air pressure Pc.
Air velocity through the nozzles.
Air flow rates.
Total pressure rise across the fan.
Air horsepower for the subsection.
Total air horsepower for section III.
Deceleration force.
Critical force.

Typical calculating procedures are shown at EXHIBITS for calculation of air cushion and strip cooling at chapter 10.0 and 11.0.

Following charts are summary of results for air cushion and strip cooling for the product mix rolled on 56 In. Hot Strip Mill.

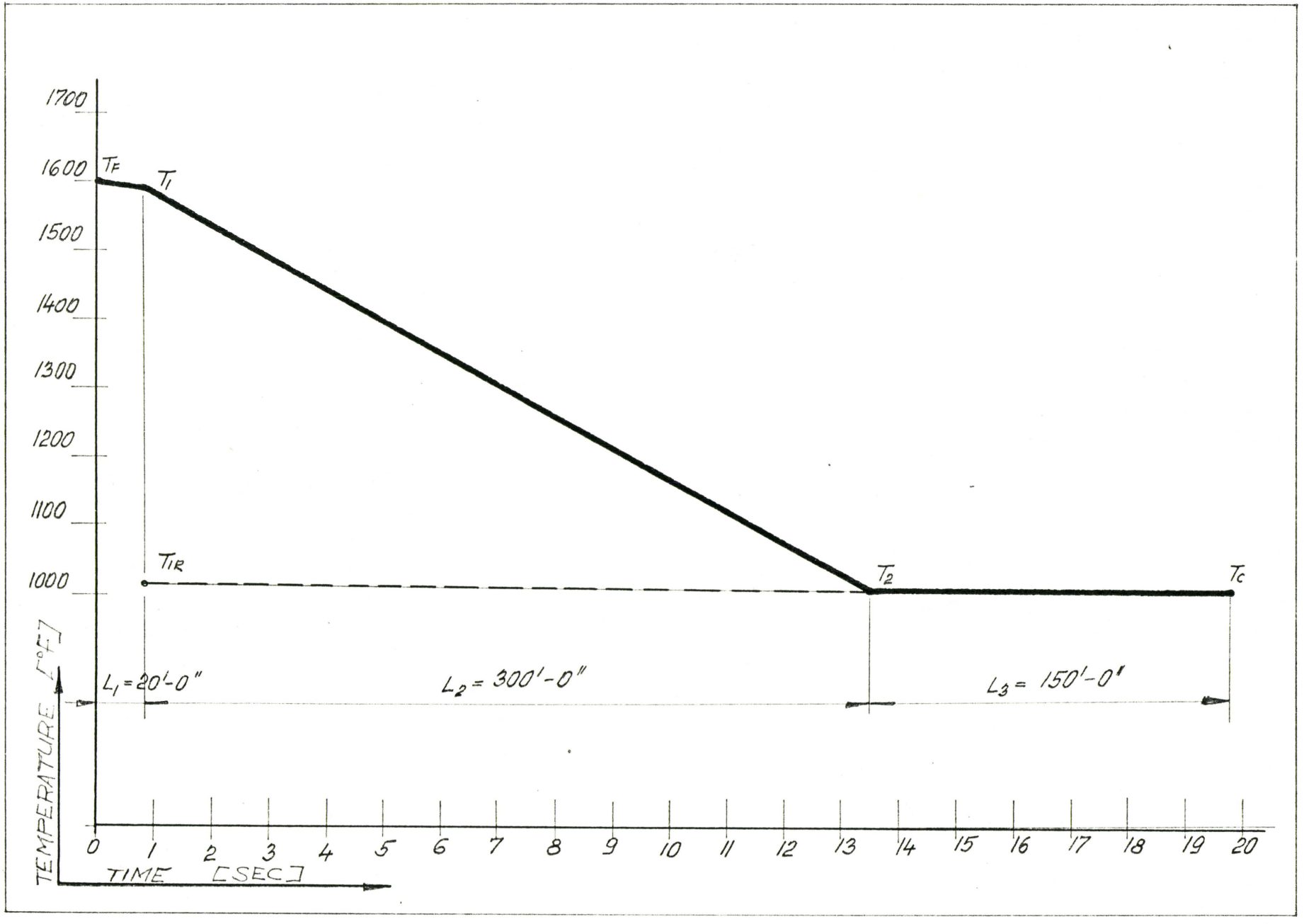

FIG. 37. STRIP COOLING ON RUNOUT TABLE AT V_{S1}

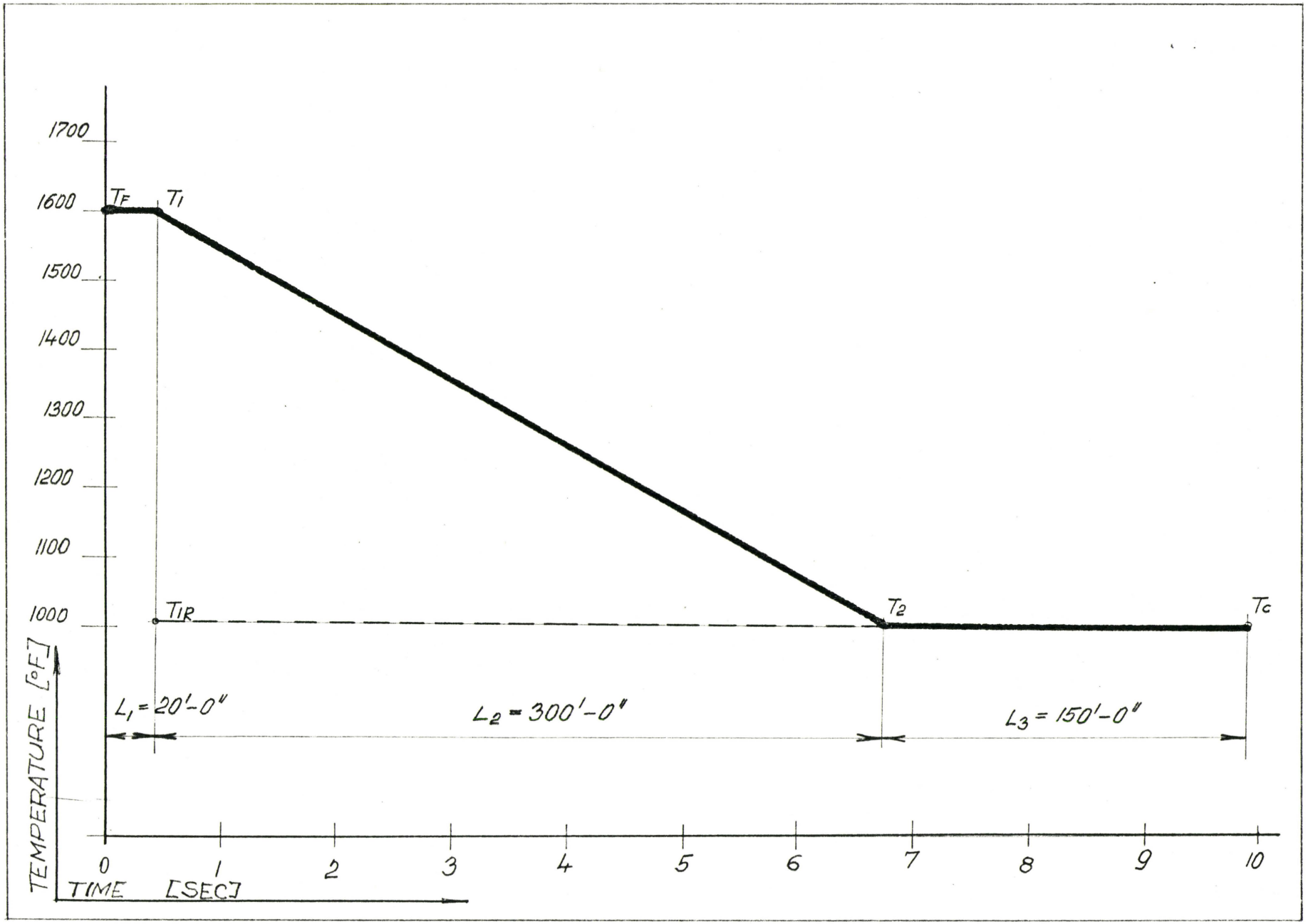

FIG. 38. STRIP COOLING ON RUNOUT TABLE AT V_{S2}

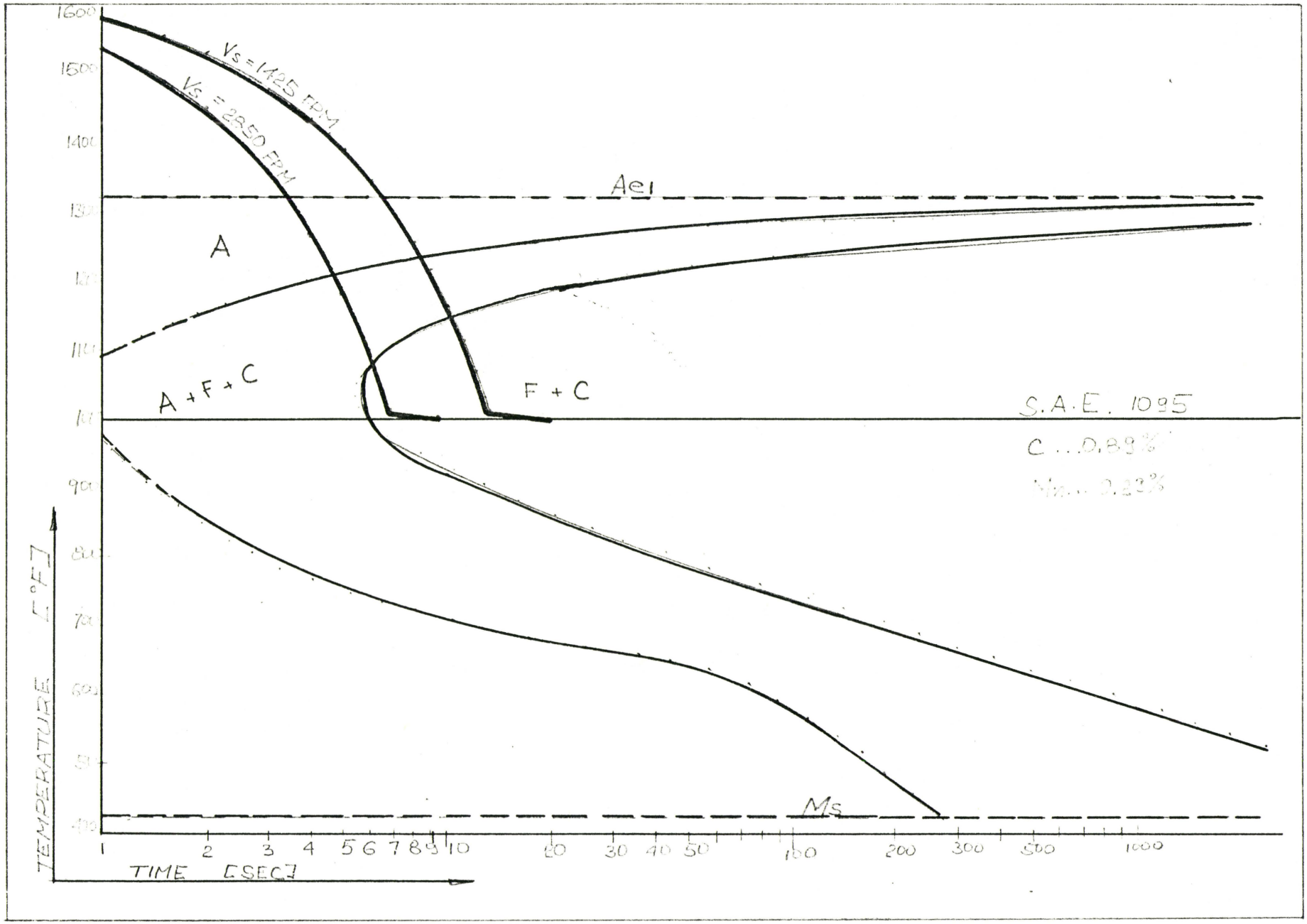

FIG. 39. STRIP COOLING IN TTT DIAGRAM

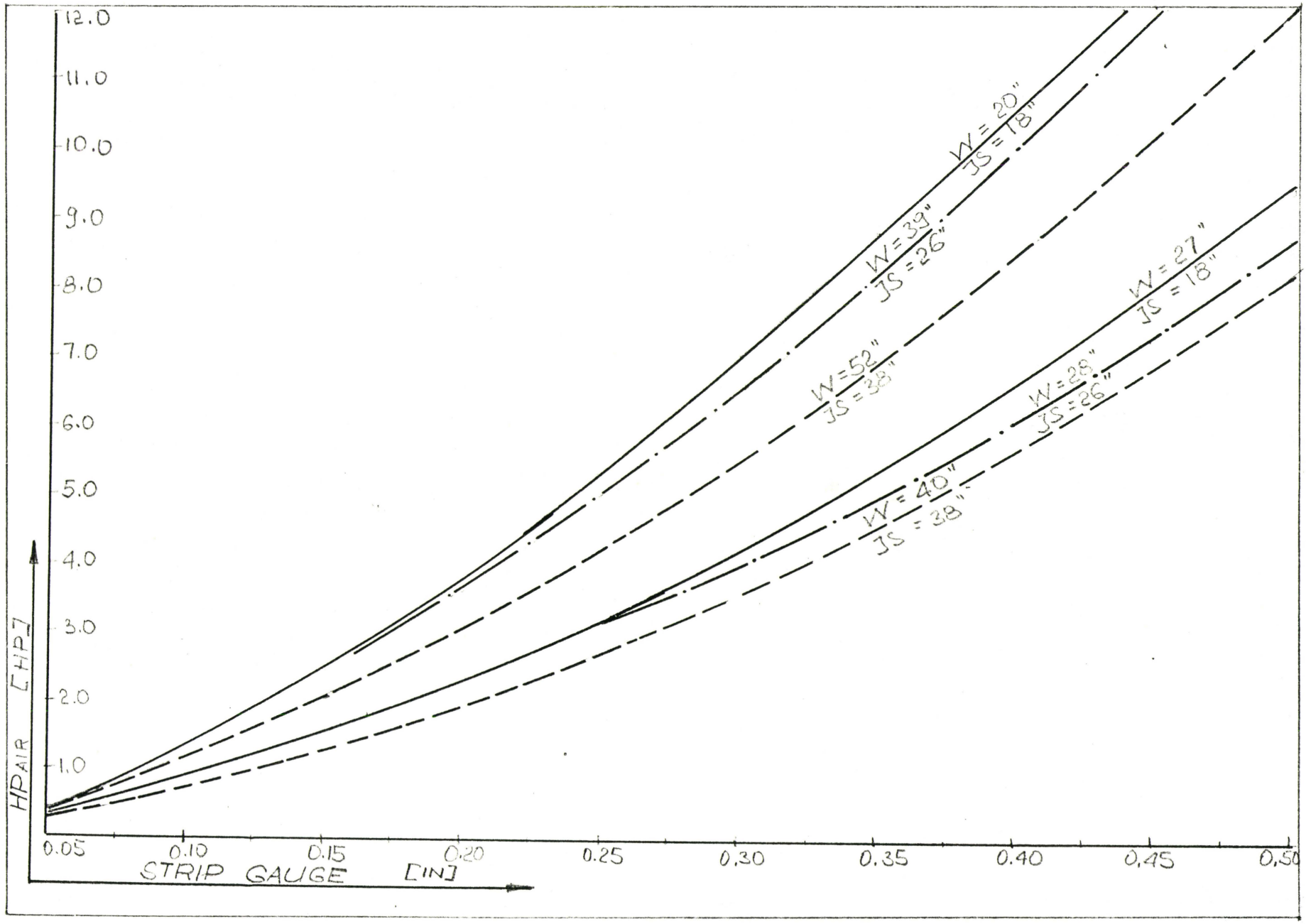

FIG. 40. AIR HORSEPOWER vs. STRIP GAUGE

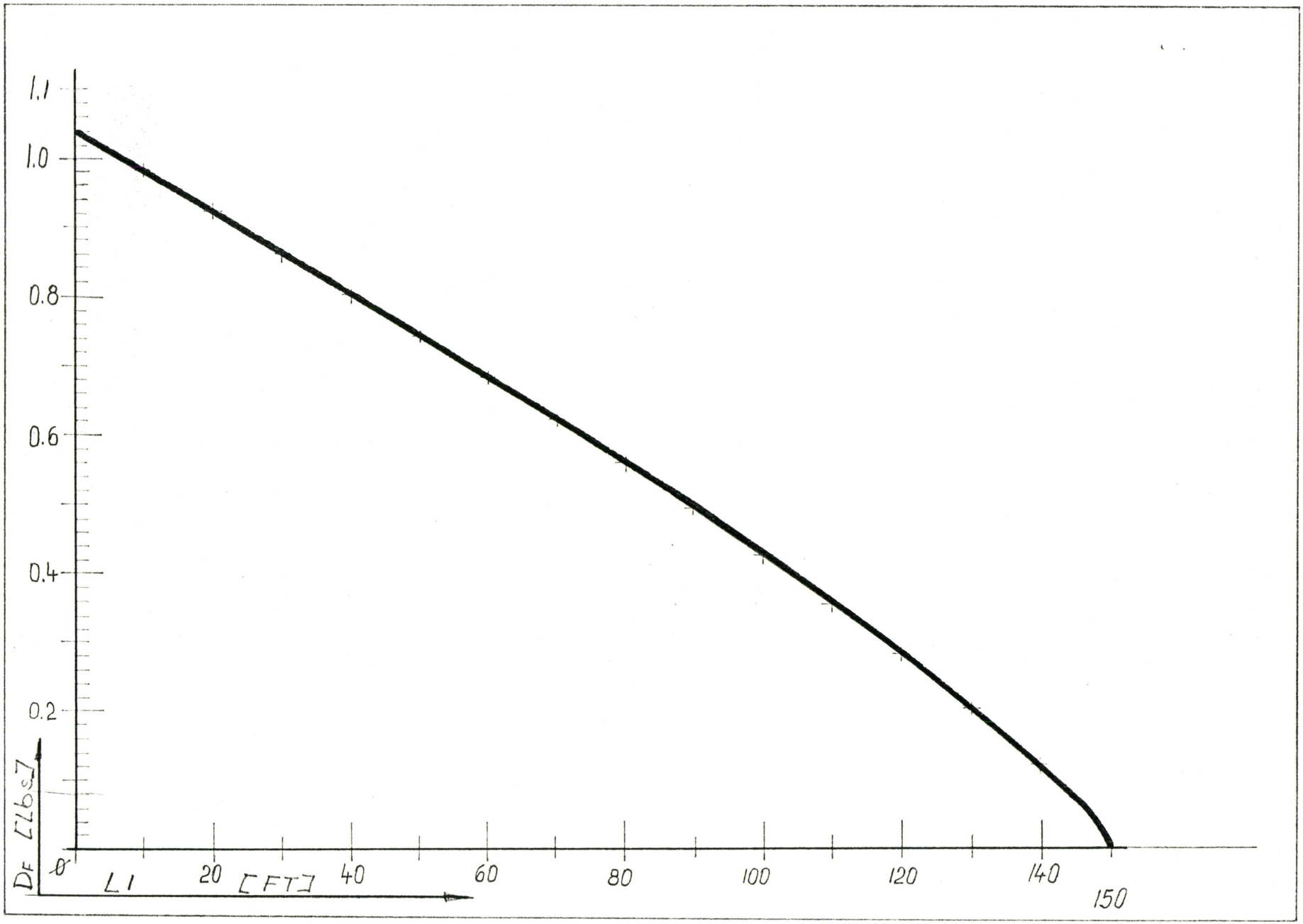

FIG. 41. DECELERATION FORCE ALONG THE STRIP LENGTH

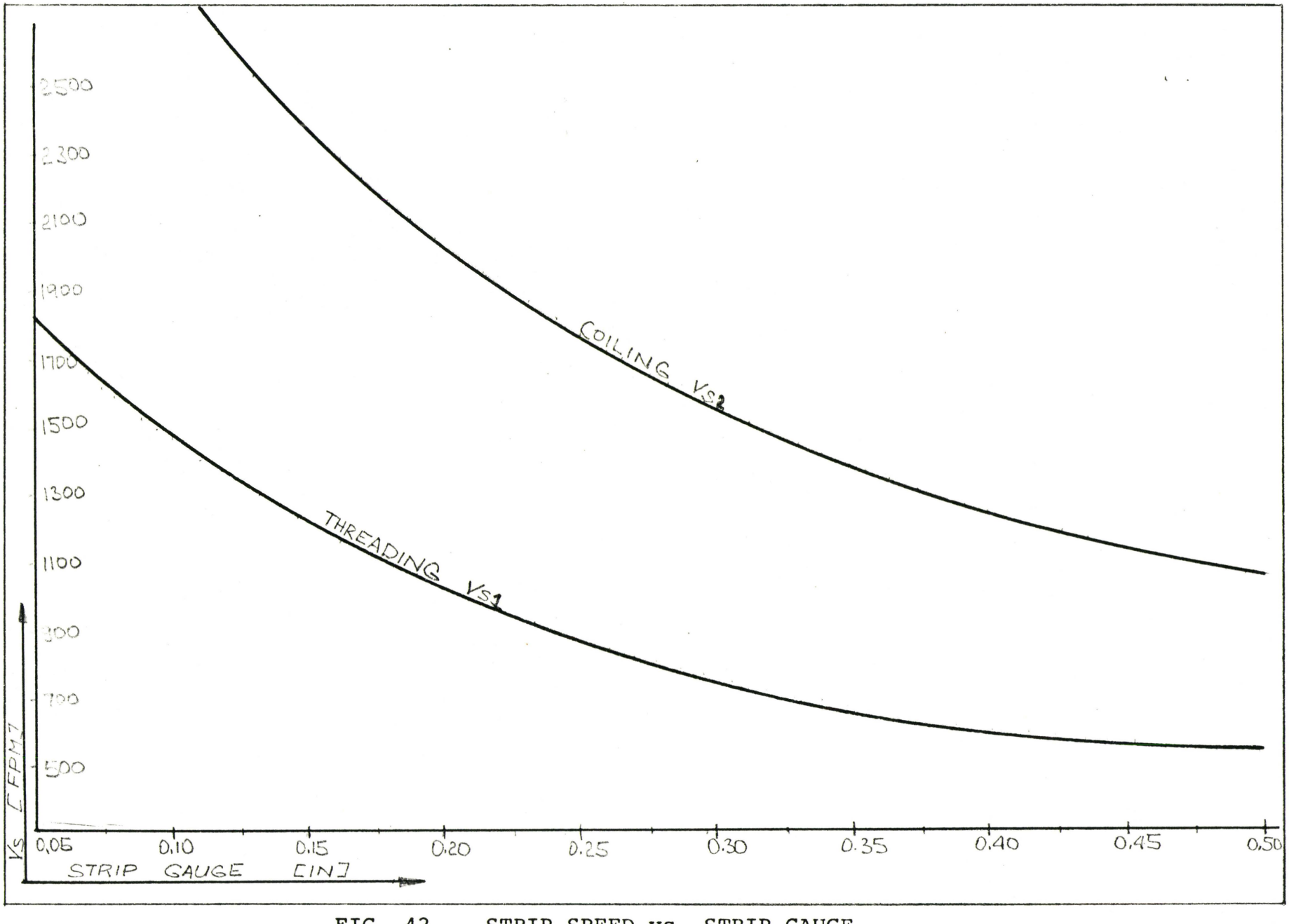

FIG. 42. STRIP SPEED vs. STRIP GAUGE

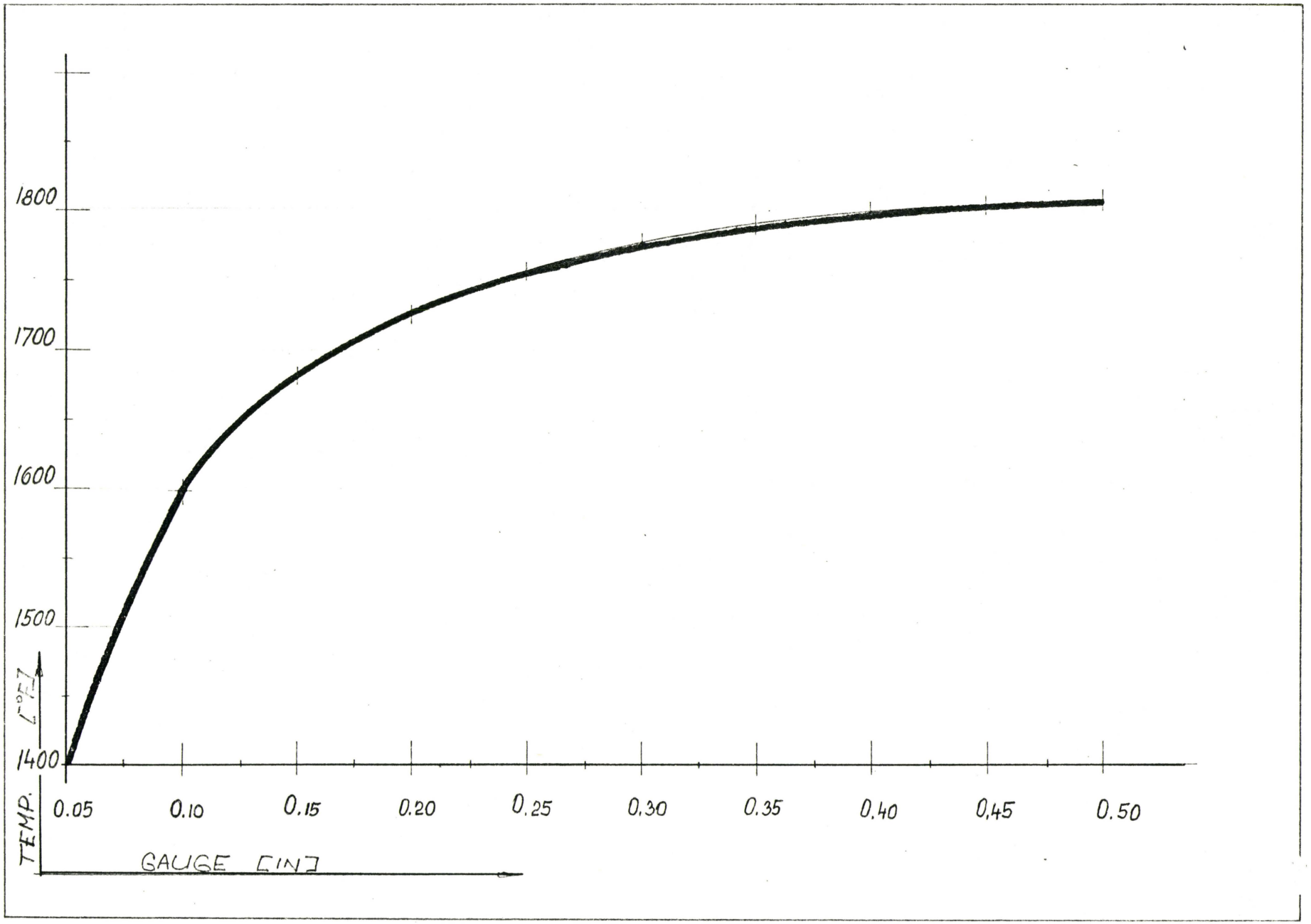

FIG. 43. FINISHING TEMPERATURE vs. STRIP GAUGE

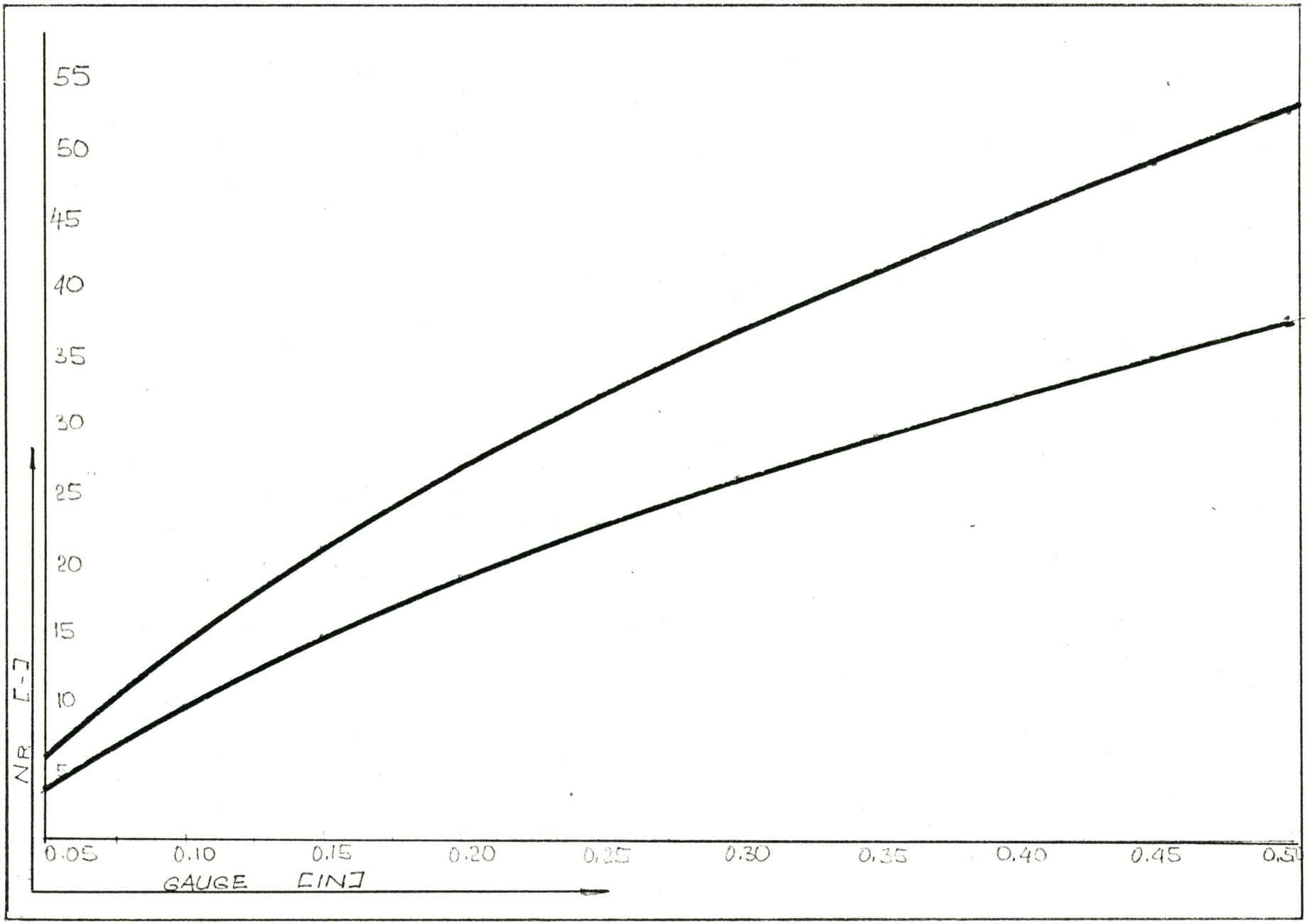

FIG. 44. THEORETICAL NUMBER OF CONTINUOUS JETS vs. STRIP GAUGE AT V_{S1} AND V_{S2}

13.0 Economical Comparison of Conventional and Air Cushioned Runout Table

The benefits realized in capital outlay are listed in tabular form below.

TABLE 6. CAPITAL COSTS

Item	Conventional Runout Table	Air Cushioned Runout Table
Mechanical part	$5000/ft	$840/ft
4-HP DC Motor ($2600 each)	$1730/ft	-
15HP AC Motor + Fan	-	$70/ft
Foundations	same	same
Total cost/ft	$6730	$920

Total capital expenditure for 150 ft long conventional runout table is $1,009,500 and $138,000 for the same length of air cushioned runout table.

Due to the complexity of accounting in an operation of this size, individual benefits from maintenance, power and quality can not be precisely calculated.

TABLE 7. OPERATING COSTS

Item	Conventional Runout Table	Air Cushioned Runout Table
Maintenance	$121,200/yr	$28,960
Cobbles (rejects)	$ 72,000/yr	$12,000
Power	High	Low
Lubrication	High	Low
Surface defects	High	Low
Metallurgical rejects	High	Low

Many Hot Strip Mills at present are working the maximum possible number of hours. To supplement mill production, hot strip is purchased from steel mills with surplus capacity, for which a premium is paid. As a result, any decrease in delays on the mill is highly profitable to the company, as it offsets these purchases. As an example, delays incurred by cobbles, if reduced by 50%, would result in increased profits of about $400,000/yr. Reduced maintenance time for an air cushioned runout table would allow other preventive maintenance to be carried out, again reducing delays in similar savings.

14.0 Conclusion

Forty-six years of experience have been realized on continuous Hot Strip Mills. In that period, mills have proliferated and technology has expanded at ever-increasing rates. While principles have changed little since continuous mill inception, machinery and tool materials have become highly sophisticated.

To achieve any marked improvement in the profit picture, it is now time that principles of individual components of the system are revised. This thesis is an alternative proposal for improving a particular problem area in such a system.

Subject of this thesis, runout tables conventionally consist of extended series of iron rollers, bearinged at both ends, individually driven by small D/C shunt-wound motors. Speed matching is difficult, as surface speeds exceed 40 mph on 12" O.D. rollers. The conventional runout tables have long been a source of waste and quality reduction. The alternative proposed is a peripheral jet air-cushioned runout table with no moving parts contacting the strip. Construction costs and maintenance are low.

Conventional cooling of the Hot Strip as it exits from the finishing mill train is accomplished by a combination of high-pressure sprays and a recently-devised laminar flow system from individual nozzles.

The alternative proposed is a continuous laminar flow curtain of water delivering uniform cooling across the width of the strip.

Surface quality productivity, control of physical properties of the strip and capital investment are benefited by these proposals. The present financial situation of the Steel Industry prohibits large capital investments to circumvent these problems.

The application of a proven principle, air-cushioned transport, offers a solid procedural change, at low cost, to virtually eliminate the problems currently experienced. Design data, graphically represented in this paper, were calculated and verified experimentally with large-scale models.

It should be kept in mind that while present proposals for air-cushioning applies only to the terminal section of the runout table, further investigations may reveal convenient applications for the cooling section of the table where water must be supplied to both top and bottom of the strip.

An obvious application for air-cushioning is the short span (about 20') immediately at the exit of the final finishing mill. In this section, width and gauge monitoring are carried out. Conventional runout tables cause excessive vertical movement of the strip, hindering these measurements. Discussion of this area in detail is excluded as tangible savings from the short span involved would be small.

Much costly unscheduled processing is caused by inefficient and poorly regulated cooling of the Hot Strip. Structures not initially achieved on cooling on the runout table must be obtained by subsequent annealing.

In many instances, desired structures cannot be attained at all by present industrial reprocessing. Some of the problems causing this poor structure control would be alleviated by a continuous cooling water curtain, exposing the full width of the strip to identical conditions. Due to more efficient cooling, the length of table required could be shortened, again reducing large capital investments.

As the production capacity of present Hot Strip Mills is being pushed by product demand (except for a recent short-term recession in restricted geographical areas), productivity of such mills is at a premium. Importation of Hot Strip from countries utilizing low-cost labour to achieve competitive prices cannot be continued indefinitely for obvious reasons. Any reduction in capital investment that can be realized should be seriously considered, as competitive pricing can be maintained for extended periods by this means alone.

Both these proposals offer such a reduction. Tangible evidence of this is that by substituting only one-third of a conventional runout table with an air-cushioned table, capital investment is reduced by more than 3/4 million dollars. Over a conservative

mill life expectancy of thirty years, maintenance costs are reduced by over 2 million dollars. Current costs for maintaining a conventional runout table are well documented.

16.0 References

1. Frank Kreigh, 1967, Principles of Heat Transfer.

2. Association of Iron and Steel Engineers, 1970, The Hot Strip Mill Generation II.

3. Association of Iron and Steel Engineers, 1941, The Modern Strip Mill.

4. A. Geleji, 1967, Forge Equipment, Rolling Mills and Accessories.

5. Engineering Digest, June, 1969, Design Principles for Air Cushion Devices.

6. Automation, January 1970, Directed Air Jets Convey Material.

7. Blast Furnace and Steel Plant, April 1970, The Influence of Past Experience of Automated Hot Strip Mills on Future Mill Designs.

8. Product Engineering, November 1967, Designing a New Generation of Air-Cushion Vehicles.

9. Iron and Steel Engineer, January 1965, Algoma's 10G in Wide Hot Strip Mill.

10. Stelco Research Department, 1969, A Study of Laminar Spray Cooling of Strip on the 56 In. Hot Strip Mill.

11. Product Engineering, August 1967, Good-by wheels? Air and Magnetic-lif Bid for Job.

12. The Professional Engineer and Engineering Digest, September 1966, Hovercraft Operating Principles and General Design.

13. Casiorek and Carter, 1967, Mechanics of Fluids for Mechanical Engineers.

14. National Aeronautics and Space Administration, 1969, Compressed Gas Handbook.

15. C. Harold Berry, 1963, Flow and Fan.

16. M. Kratky, D. Boyle, Stelco, Industrial Engineering, 1970, 56 In. Mill Improved Throughput.

17. Journal of Iron and Steel Institute, May 1957, The Cooling of Hot Steel Strip with Water Sets.

APPENDIX 1

Calculation of decelerating force, critical force, and boundary layer along the air cushioned runout table.

	DF(I)	PCR(I)	BLT(I)
2.	.0203187426	1996.1470833333	.2878182774
3.	.0236082455	887.1764814815	.3525039591
4.	.0296034788	499.0367708333	.4070365114
5.	.0293275787	319.3835333333	.4550806544
6.	.0318333517	221.7941203704	.4985158798
7.	.0341626287	162.9507823129	.5384586918
8.	.0363472717	124.7591927083	.5756365548
9.	.0384101063	98.5751646091	.6105547671
10.	.0403692480	79.8458833333	.6435812334
11.	.0422386956	65.9883333333	.6749936921
12.	.0440296048	55.4485300926	.7050079183
13.	.0457510228	47.2460848126	.7337955064
14.	.0474103993	40.7376955782	.7614955848
15.	.0490139519	35.4870592593	.7882228150
16.	.0505669309	31.1897981771	.8140730228
17.	.0520738168	27.6283333333	.8391272650
18.	.0535384684	24.6437911523	.8634548322
19.	.0549642364	22.1179732225	.8871155098
20.	.0563540525	19.9614708333	.9101613088
21.	.0577104986	18.1056424792	.9326378121
22.	.0590358625	16.4970833333	.9545852340
23.	.0603321829	15.0937397606	.9760392663
24.	.0616012851	13.8621325231	.9970317596
25.	.0628448116	12.7753413333	1.0175912785
26.	.0640642461	11.8115212032	1.0377435572
27.	.0652609346	10.9527960677	1.0575118774
28.	.0664361025	10.1844238946	1.0769173837
29.	.0675908690	9.4941597305	1.0959793482
30.	.0687262597	8.8717648148	1.1147153951
31.	.0698432172	8.3086246965	1.1331416913
32.	.0709426102	7.7974495443	1.1512731096
33.	.0720252412	7.3320370370	1.1691233696
34.	.0730918536	6.9070833333	1.1867051587
35.	.0741431373	6.5180312925	1.2040302380
36.	.0751797342	6.1609477881	1.2211095342
37.	.0762022428	5.8324239104	1.2379532200
38.	.0772112218	5.5294933056	1.2545707853
39.	.0782071940	5.2495649792	1.2709710995
40.	.0791906496	4.9903677083	1.2871624669
41.	.0801620485	4.7499038271	1.3031526758
42.	.0811218234	4.5264106198	1.3189490426
43.	.0820703816	4.3183279250	1.3345584503
44.	.0830081070	4.1242708333	1.3499873843
45.	.0839353625	3.9430065844	1.3652419632
46.	.0848524908	3.7734349401	1.3803279678
47.	.0857598166	3.6145714501	1.3952508660
48.	.0866576474	3.4655331308	1.4100158366
49.	.0875462751	3.3255261697	1.4246277899
50.	.0884259770	3.1938353333	1.4390913870
51.	.0892970165	3.0698148148	1.4534110570
52.	.0901596446	2.9528803008	1.4675916128
53.	.0910141002	2.8425020767	1.4816352660
54.	.0918606112	2.7381990169	1.4955476394
55.	.0926993951	2.6395333333	1.5093317800
56.	.0935306597	2.5461059736	1.5229911696

	DF(I)	PCR(I)	BLT(I)
57.	.0943546034	2.4575525803	1.5365291351
58.	.0951714165	2.3735399326	1.5499488583
59.	.0959812807	2.2937628076	1.5632533844
60.	.0967843705	2.2179412037	1.5764456300
61.	.0975808529	2.1458178805	1.5895283906
62.	.0983708884	2.0771561741	1.6025043479
63.	.0991546310	2.0117380532	1.6153760755
64.	.0999322287	1.9493623861	1.6281460456
65.	.1007038238	1.8898433925	1.6408166339
66.	.1014695531	1.8330092593	1.6533901254
67.	.1022295483	1.7787008985	1.6658687184
68.	.1029839364	1.7267708333	1.6782545300
69.	.1037328397	1.6770821956	1.6905495993
70.	.1044763760	1.6295078231	1.7027558922
71.	.1052146590	1.5839294452	1.7148753041
72.	.1059477986	1.5402369470	1.7269096644
73.	.1066759008	1.4983277038	1.7388607390
74.	.1073990679	1.4581059776	1.7507302333
75.	.1081173989	1.4194823704	1.7625197957
76.	.1088309896	1.3823733264	1.7742310195
77.	.1095399326	1.3467006803	1.7858654460
78.	.1102443176	1.3123912448	1.7974245663
79.	.1109442312	1.2793764354	1.8089098241
80.	.1116397575	1.2475919271	1.8203226176
81.	.1123309782	1.2169773409	1.8316643013
82.	.1130179720	1.1874759568	1.8429361880
83.	.1137008156	1.1590344511	1.8541395507
84.	.1143795834	1.1316026550	1.8652756241
85.	.1150543473	1.1051333333	1.8763456063
86.	.1157251776	1.0795819813	1.8873506602
87.	.1163921420	1.0549066367	1.8982919151
88.	.1170553068	1.0310677083	1.9091704679
89.	.1177147361	1.0080278164	1.9199873843
90.	.1183704923	.9857516461	1.9307437003
91.	.1190226361	.9642058125	1.9414404232
92.	.1196712265	.9433587350	1.9520785325
93.	.1203163211	.9231805218	1.9626589815
94.	.1209579757	.9036428625	1.9731826976
95.	.1215962448	.8847189289	1.9836505837
96.	.1222311814	.8663832827	1.9940635192
97.	.1228628371	.8486117901	2.0044223605
98.	.1234912623	.8313815424	2.0147279418
99.	.1241165060	.8146707819	2.0249810764
100.	.1247386161	.7984588333	2.0351825570
101.	.1253576392	.7827260399	2.0453331564
102.	.1259736209	.7674537037	2.0554336285
103.	.1265866054	.7526240299	2.0654847086
104.	.1271966362	.7382200752	2.0754871144
105.	.1278037555	.7242256992	2.0854415461
106.	.1284080046	.7106255192	2.0953486876
107.	.1290094239	.6974048680	2.1052092065
108.	.1296080526	.6845497542	2.1150237549
109.	.1302039294	.6720468255	2.1247929697
110.	.1307970917	.6598833333	2.1345174734
111.	.1313875764	.6480471012	2.1441978745
112.	.1319754194	.6365264934	2.1538347674
113.	.1325606559	.6253103871	2.1634287337
114.	.1331433201	.6143881451	2.1729803418
115.	.1337234458	.6037495904	2.1824901481
116.	.1343010658	.5933849832	2.1919586964

	DF (I)	Pcr (I)	BLT (I)
117.	.1348762122	.5832849977	2.2013865193
118.	.1354489167	.5734407019	2.2107741376
119.	.1360192100	.5638435374	2.2201220615
120.	.1365871224	.5544853009	2.2294307902
121.	.1371526633	.5453581267	2.2387008127
122.	.1377159219	.5364544701	2.2479326078
123.	.1382768664	.5277670919	2.2571266446
124.	.1388355446	.5192890435	2.2662833826
125.	.1393919839	.5110136533	2.2754032721
126.	.1399462109	.5029345133	2.2844867544
127.	.1404982517	.4950454668	2.2935342621
128.	.1410481321	.4873405965	2.3025462192
129.	.1415958772	.4798142139	2.3115230416
130.	.1421415117	.4724608481	2.3204651371
131.	.1426850599	.4652752365	2.3293729055
132.	.1432265453	.4582523148	2.3382467392
133.	.1437659915	.4513872086	2.3470870230
134.	.1443034211	.4446752246	2.3558941347
135.	.1448388568	.4381118427	2.3646684449
136.	.1453723204	.4316927083	2.3734103174
137.	.1459038337	.4254136253	2.3821201093
138.	.1464334179	.4192705489	2.3907981713
139.	.1469610937	.4132595794	2.3994448475
140.	.1474868818	.4073769558	2.4080604761
141.	.1480108022	.4016190500	2.4166453892
142.	.1485328747	.3959823613	2.4251999129
143.	.1490531186	.3904635108	2.4337243677
144.	.1495715532	.3850592368	2.4422190684
145.	.1500881971	.3797663892	2.4506843245
146.	.1506030687	.3745819259	2.4591204401
147.	.1511161861	.3695029077	2.4675277140
148.	.1516275673	.3645264944	2.4759064400
149.	.1521372296	.3596499407	2.4842569070
150.	.1526451903	.3548705926	2.4925793990

WIDTH = 50.0 GAGE = .100

APPENDIX 2

Calculation of air velocity (at the end of the nozzle), air pressure and air horsepower for various strip width, jet separation and strip gauge.

WIDTH	GAUGE	PRESSURE	HP AIR
4.00000E+01	5.00000E-02	2.25287E+00	2.54146E-01
4.00000E+01	1.00000E-01	4.50575E+00	7.18334E-01
4.00000E+01	1.50000E-01	6.75862E+00	1.32050E+00
4.00000E+01	2.00000E-01	9.01149E+00	2.03317E+00
4.00000E+01	2.50000E-01	1.12644E+01	2.84144E+00
4.00000E+01	3.00000E-01	1.35172E+01	3.73517E+00
4.00000E+01	3.50000E-01	1.57701E+01	4.70686E+00
4.00000E+01	4.00000E-01	1.80230E+01	5.75068E+00
4.00000E+01	4.50000E-01	2.02759E+01	6.86195E+00
4.00000E+01	5.00000E-01	2.25287E+01	8.03681E+00
4.10000E+01	5.00000E-02	2.30920E+00	2.63736E-01
4.10000E+01	1.00000E-01	4.61839E+00	7.45959E-01
4.10000E+01	1.50000E-01	6.92759E+00	1.37041E+00
4.10000E+01	2.00000E-01	9.23678E+00	2.10969E+00
4.10000E+01	2.50000E-01	1.15460E+01	2.94866E+00
4.10000E+01	3.00000E-01	1.38552E+01	3.87611E+00
4.10000E+01	3.50000E-01	1.61644E+01	4.88446E+00
4.10000E+01	4.00000E-01	1.84736E+01	5.96767E+00
4.10000E+01	4.50000E-01	2.07828E+01	7.12088E+00
4.10000E+01	5.00000E-01	2.30920E+01	8.34007E+00
4.20000E+01	5.00000E-02	2.36552E+00	2.73444E-01
4.20000E+01	1.00000E-01	4.73103E+00	7.73415E-01
4.20000E+01	1.50000E-01	7.09655E+00	1.42085E+00
4.20000E+01	2.00000E-01	9.46207E+00	2.18755E+00
4.20000E+01	2.50000E-01	1.18276E+01	3.05719E+00
4.20000E+01	3.00000E-01	1.41931E+01	4.01878E+00
4.20000E+01	3.50000E-01	1.65586E+01	5.06425E+00
4.20000E+01	4.00000E-01	1.89241E+01	6.18732E+00
4.20000E+01	4.50000E-01	2.12897E+01	7.38298E+00
4.20000E+01	5.00000E-01	2.36552E+01	8.64705E+00
4.30000E+01	5.00000E-02	2.42184E+00	2.83267E-01
4.30000E+01	1.00000E-01	4.84368E+00	8.01201E-01
4.30000E+01	1.50000E-01	7.26552E+00	1.47190E+00
4.30000E+01	2.00000E-01	9.68736E+00	2.26614E+00
4.30000E+01	2.50000E-01	1.21092E+01	3.16703E+00
4.30000E+01	3.00000E-01	1.45310E+01	4.16316E+00
4.30000E+01	3.50000E-01	1.69529E+01	5.24619E+00
4.30000E+01	4.00000E-01	1.93747E+01	6.40961E+00
4.30000E+01	4.50000E-01	2.17966E+01	7.64822E+00
4.30000E+01	5.00000E-01	2.42184E+01	8.95770E+00
4.40000E+01	5.00000E-02	2.47816E+00	2.93206E-01
4.40000E+01	1.00000E-01	4.95632E+00	8.29312E-01
4.40000E+01	1.50000E-01	7.43448E+00	1.52354E+00
4.40000E+01	2.00000E-01	9.91264E+00	2.34565E+00
4.40000E+01	2.50000E-01	1.23908E+01	3.27814E+00
4.40000E+01	3.00000E-01	1.48690E+01	4.30923E+00
4.40000E+01	3.50000E-01	1.73471E+01	5.43025E+00
4.40000E+01	4.00000E-01	1.98253E+01	6.63450E+00
4.40000E+01	4.50000E-01	2.23034E+01	7.91656E+00
4.40000E+01	5.00000E-01	2.47816E+01	9.27199E+00
4.50000E+01	5.00000E-02	2.53448E+00	3.03258E-01
4.50000E+01	1.00000E-01	5.06897E+00	8.57744E-01
4.50000E+01	1.50000E-01	7.60345E+00	1.57578E+00
4.50000E+01	2.00000E-01	1.01379E+01	2.42607E+00
4.50000E+01	2.50000E-01	1.26724E+01	3.39053E+00
4.50000E+01	3.00000E-01	1.52069E+01	4.45697E+00
4.50000E+01	3.50000E-01	1.77414E+01	5.61642E+00
4.50000E+01	4.00000E-01	2.02759E+01	6.86195E+00
4.50000E+01	4.50000E-01	2.28103E+01	8.18797E+00
4.50000E+01	5.00000E-01	2.53448E+01	9.58987E+00

WIDTH	GAUGE	PRESSURE	HP AIR
4.60000E+01	5.00000E-02	2.59080E+00	3.13423E-01
4.60000E+01	1.00000E-01	5.18161E+00	8.86494E-01
4.60000E+01	1.50000E-01	7.77241E+00	1.62859E+00
4.60000E+01	2.00000E-01	1.03632E+01	2.50738E+00
4.60000E+01	2.50000E-01	1.29540E+01	3.50417E+00
4.60000E+01	3.00000E-01	1.55448E+01	4.60636E+00
4.60000E+01	3.50000E-01	1.81356E+01	5.80407E+00
4.60000E+01	4.00000E-01	2.07264E+01	7.09195E+00
4.60000E+01	4.50000E-01	2.33172E+01	8.46242E+00
4.60000E+01	5.00000E-01	2.59080E+01	9.91130E+00
4.70000E+01	5.00000E-02	2.64713E+00	3.23698E-01
4.70000E+01	1.00000E-01	5.29425E+00	9.15558E-01
4.70000E+01	1.50000E-01	7.94138E+00	1.68199E+00
4.70000E+01	2.00000E-01	1.05885E+01	2.58959E+00
4.70000E+01	2.50000E-01	1.32356E+01	3.61906E+00
4.70000E+01	3.00000E-01	1.58828E+01	4.75738E+00
4.70000E+01	3.50000E-01	1.85299E+01	5.99498E+00
4.70000E+01	4.00000E-01	2.11770E+01	7.32446E+00
4.70000E+01	4.50000E-01	2.38241E+01	8.73936E+00
4.70000E+01	5.00000E-01	2.64713E+01	1.02362E+01
4.80000E+01	5.00000E-02	2.70345E+00	3.34084E-01
4.80000E+01	1.00000E-01	5.40690E+00	9.44932E-01
4.80000E+01	1.50000E-01	8.11034E+00	1.73595E+00
4.80000E+01	2.00000E-01	1.08138E+01	2.67267E+00
4.80000E+01	2.50000E-01	1.35172E+01	3.73517E+00
4.80000E+01	3.00000E-01	1.62207E+01	4.91601E+00
4.80000E+01	3.50000E-01	1.89241E+01	6.18732E+00
4.80000E+01	4.00000E-01	2.16276E+01	7.55946E+00
4.80000E+01	4.50000E-01	2.43310E+01	9.02027E+00
4.80000E+01	5.00000E-01	2.70345E+01	1.05647E+01
4.90000E+01	5.00000E-02	2.75977E+00	3.44578E-01
4.90000E+01	1.00000E-01	5.51954E+00	9.74415E-01
4.90000E+01	1.50000E-01	8.27931E+00	1.79748E+00
4.90000E+01	2.00000E-01	1.10391E+01	2.75663E+00
4.90000E+01	2.50000E-01	1.37989E+01	3.85250E+00
4.90000E+01	3.00000E-01	1.65586E+01	5.06425E+00
4.90000E+01	3.50000E-01	1.93184E+01	6.38169E+00
4.90000E+01	4.00000E-01	2.20782E+01	7.79692E+00
4.90000E+01	4.50000E-01	2.48379E+01	9.30362E+00
4.90000E+01	5.00000E-01	2.75977E+01	1.08965E+01
5.00000E+01	5.00000E-02	2.81609E+00	3.55180E-01
5.00000E+01	1.00000E-01	5.63218E+00	1.00460E+00
5.00000E+01	1.50000E-01	8.44828E+00	1.84557E+00
5.00000E+01	2.00000E-01	1.12644E+01	2.84144E+00
5.00000E+01	2.50000E-01	1.40805E+01	3.97104E+00
5.00000E+01	3.00000E-01	1.68966E+01	5.22606E+00
5.00000E+01	3.50000E-01	1.97126E+01	6.57803E+00
5.00000E+01	4.00000E-01	2.25287E+01	8.03681E+00
5.00000E+01	4.50000E-01	2.53448E+01	9.58987E+00
5.00000E+01	5.00000E-01	2.81609E+01	1.12318E+01
5.10000E+01	5.00000E-02	2.87241E+00	3.65289E-01
5.10000E+01	1.00000E-01	5.74483E+00	1.03489E+00
5.10000E+01	1.50000E-01	8.61724E+00	1.90121E+00
5.10000E+01	2.00000E-01	1.14897E+01	2.92711E+00
5.10000E+01	2.50000E-01	1.43621E+01	4.09676E+00
5.10000E+01	3.00000E-01	1.72345E+01	5.37745E+00
5.10000E+01	3.50000E-01	2.01069E+01	6.77636E+00
5.10000E+01	4.00000E-01	2.29793E+01	8.27912E+00
5.10000E+01	4.50000E-01	2.58517E+01	9.87900E+00
5.10000E+01	5.00000E-01	2.87241E+01	1.15704E+01
5.20000E+01	5.00000E-02	2.92874E+00	3.76703E-01
5.20000E+01	1.00000E-01	5.85747E+00	1.06548E+00
5.20000E+01	1.50000E-01	8.78621E+00	1.95741E+00
5.20000E+01	2.00000E-01	1.17149E+01	3.01362E+00
5.20000E+01	2.50000E-01	1.46437E+01	4.21167E+00
5.20000E+01	3.00000E-01	1.75724E+01	5.53638E+00
5.20000E+01	3.50000E-01	2.05011E+01	6.97663E+00
5.20000E+01	4.00000E-01	2.34299E+01	8.52381E+00
5.20000E+01	4.50000E-01	2.63586E+01	1.01710E+01
5.20000E+01	5.00000E-01	2.92874E+01	1.19124E+01

APPENDIX 3

Drawing 1	Section through existing runout table
Drawing 2	Testing equipment
Drawing 3	Air cushioned runout table 1 - section
Drawing 4	Air cushioned runout table 11 - section
Drawing 5	General arrangement of runout table

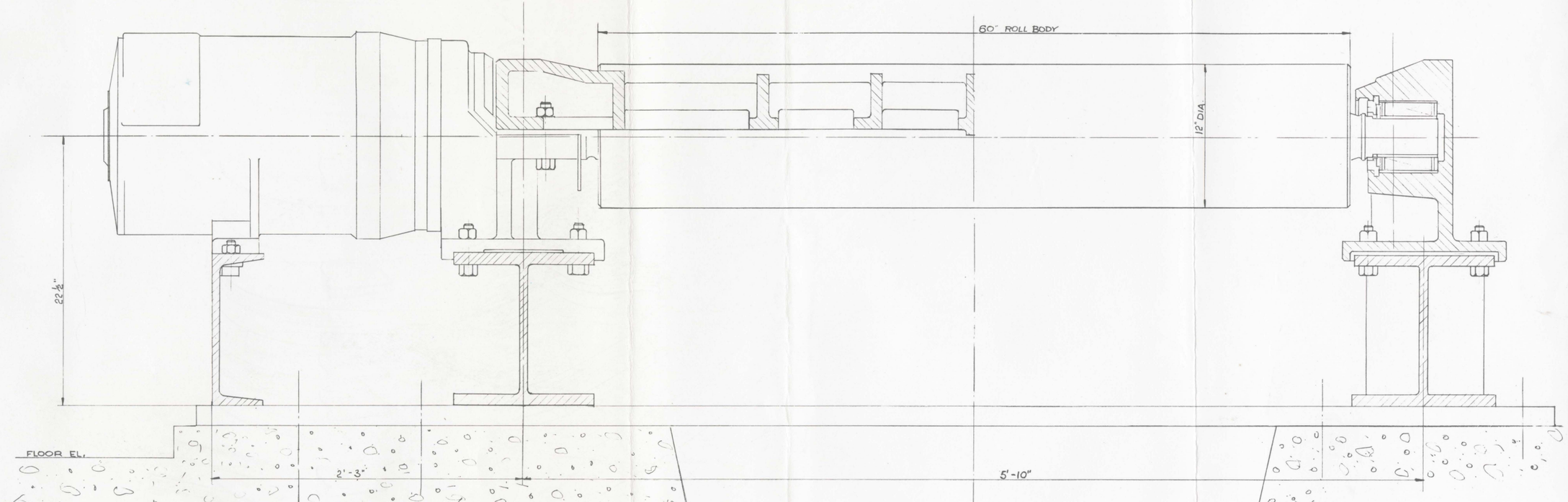

REV. NO.	DATE	DESCRIPTION	CHECKED	MIC REV.

REVISIONS

TOLERANCES ON DIMENSIONS UNLESS OTHERWISE NOTED ARE: (PLUS OR MINUS) MACHINING 0.010"; STRUCTURAL OVERALL 1/16"; ALL OTHERS 1/32" NON-ACCUMULATIVE.
SURFACE FINISH: UNLESS OTHERWISE NOTED BETWEEN 125✓ AND 250✓

[redacted]

SECTION THROUGH RUN-OUT TABLE

BILL NO.	DWG. TYPE	DRAWING ACCESSION NUMBER
SCALE	SIZE CODE 4	QUOTE THIS NUMBER FOR DOCUMENT RETRIEVAL
DATE		
DRAWN H. KRATKY	FACILITY CODE	
CHECKED	DEPT. / PROCESS AREA / FUNCTION / SHEET NO.	
APPV'D / APPV'D	REFER TO THIS NUMBER IN ALL CORRESPONDENCE AND COMMUNICATIONS	

B. & P. 10110-SM-6-70

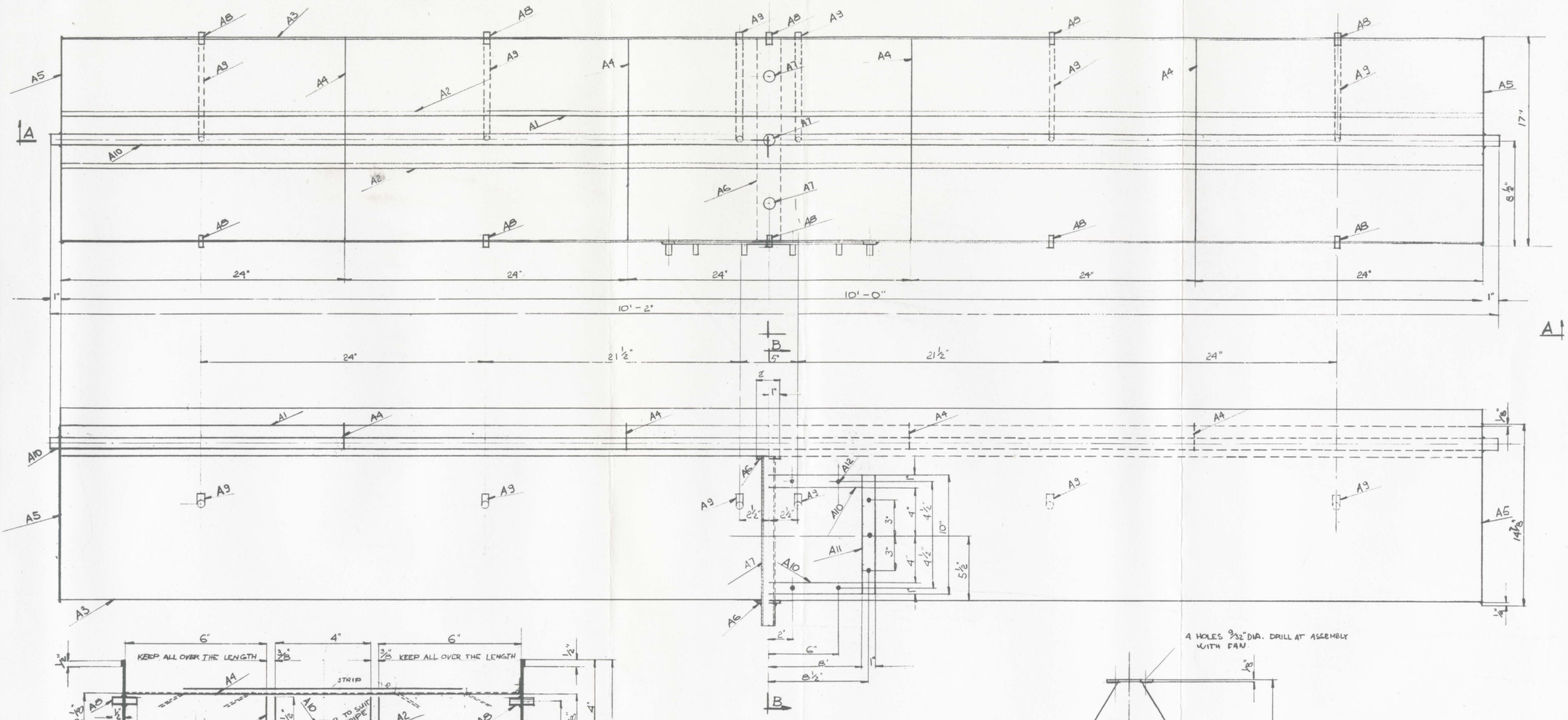

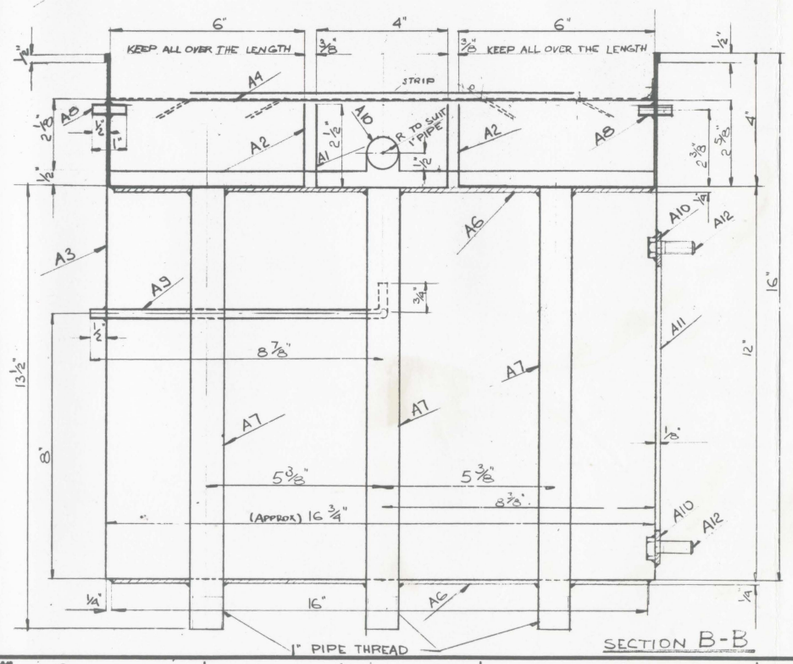

STEEL WELDED CONSTRUCTION - A

NUMBER REQUIRED	DIMENSIONS (APPROX.)	ITEM
1	9" x 1/16" x 10'-0"	A1
2	13⅛" x 1/16" x 10'-0"	A2
1	48¾" x 1/16" x 10'-0"	A3
4	2⅛" x 1/16" x 1'-4¾"	A4
2	14⅞" x 1/16" x 1'-5"	A5
2	2" x ¼" x 1'-4"	A6
3	ST'L PIPE 1" DIA. x 1'-1½"	A7
10	COPPER PIPE ¼" DIA. x 1"	A8
6	COPPER PIPE ¼" DIA. x 9¾"	A9
2	1" x ⅛" x 16"	A10
2	1" x ⅛" x 10"	A11
14	¼" N.C. x ¾" LG. BOLT WITH HEX. NUT & SPRING WASHER	A12

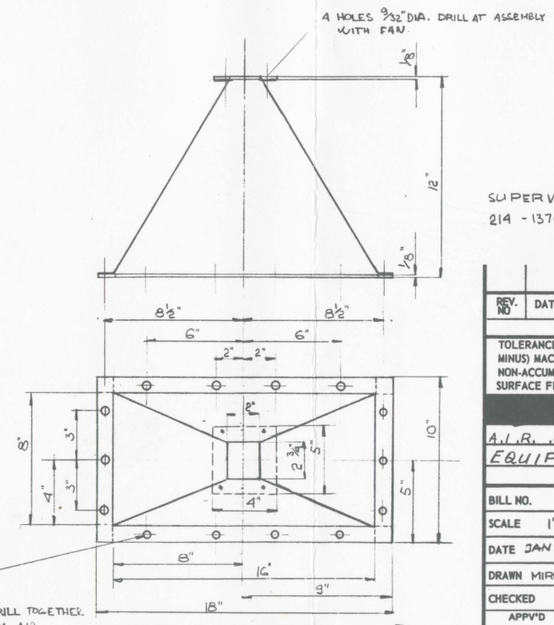

SUPERVISOR : PROF. SIDDAL

214 - 1370 - 077

REV. NO.	DATE	DESCRIPTION	CHECKED	MIC REV.

REVISIONS

TOLERANCES ON DIMENSIONS UNLESS OTHERWISE NOTED ARE: (PLUS OR MINUS) MACHINING 0.010": STRUCTURAL OVERALL 1/16": ALL OTHERS 1/32" NON-ACCUMULATIVE.
SURFACE FINISH: UNLESS OTHERWISE NOTED BETWEEN 125✓ AND 250✓

A.I.R. CUSHION TESTING EQUIPMENT

BILL NO.
SCALE 1"-0" = 3".
DATE JAN. 1970
DRAWN MIROSLAV KRATKY
CHECKED
APPV'D
APPV'D

DWG. TYPE
SIZE CODE 4

DRAWING ACCESSION NUMBER
QUOTE THIS NUMBER FOR DOCUMENT RETRIEVAL

FACILITY CODE

DEPT.	PROCESS AREA	FUNCTION	SHEET NO.

REFER TO THIS NUMBER IN ALL CORRESPONDENCE AND COMMUNICATIONS

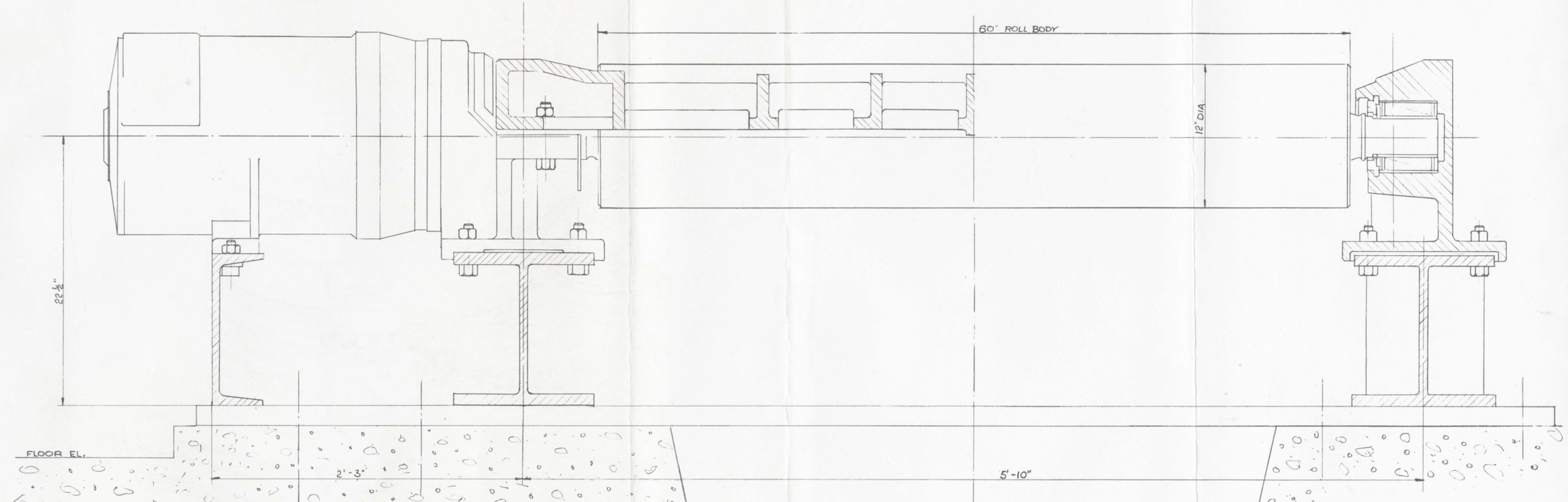

REV. NO.	DATE	DESCRIPTION	CHECKED	MIC REV.

REVISIONS

TOLERANCES ON DIMENSIONS UNLESS OTHERWISE NOTED ARE: (PLUS OR MINUS) MACHINING 0.010"; STRUCTURAL OVERALL 1/16"; ALL OTHERS 1/32" NON-ACCUMULATIVE.
SURFACE FINISH: UNLESS OTHERWISE NOTED BETWEEN 125✓ AND 250✓

[redacted]

SECTION THROUGH RUN-OUT TABLE

BILL NO.	DWG. TYPE	DRAWING ACCESSION NUMBER
SCALE	SIZE CODE 4	QUOTE THIS NUMBER FOR DOCUMENT RETRIEVAL
DATE		
DRAWN H. KRATKY	FACILITY CODE	
CHECKED	DEPT. / PROCESS AREA / FUNCTION / SHEET NO.	
APPV'D / APPV'D	REFER TO THIS NUMBER IN ALL CORRESPONDENCE AND COMMUNICATIONS	

B. & P. 10110-SM-6-70

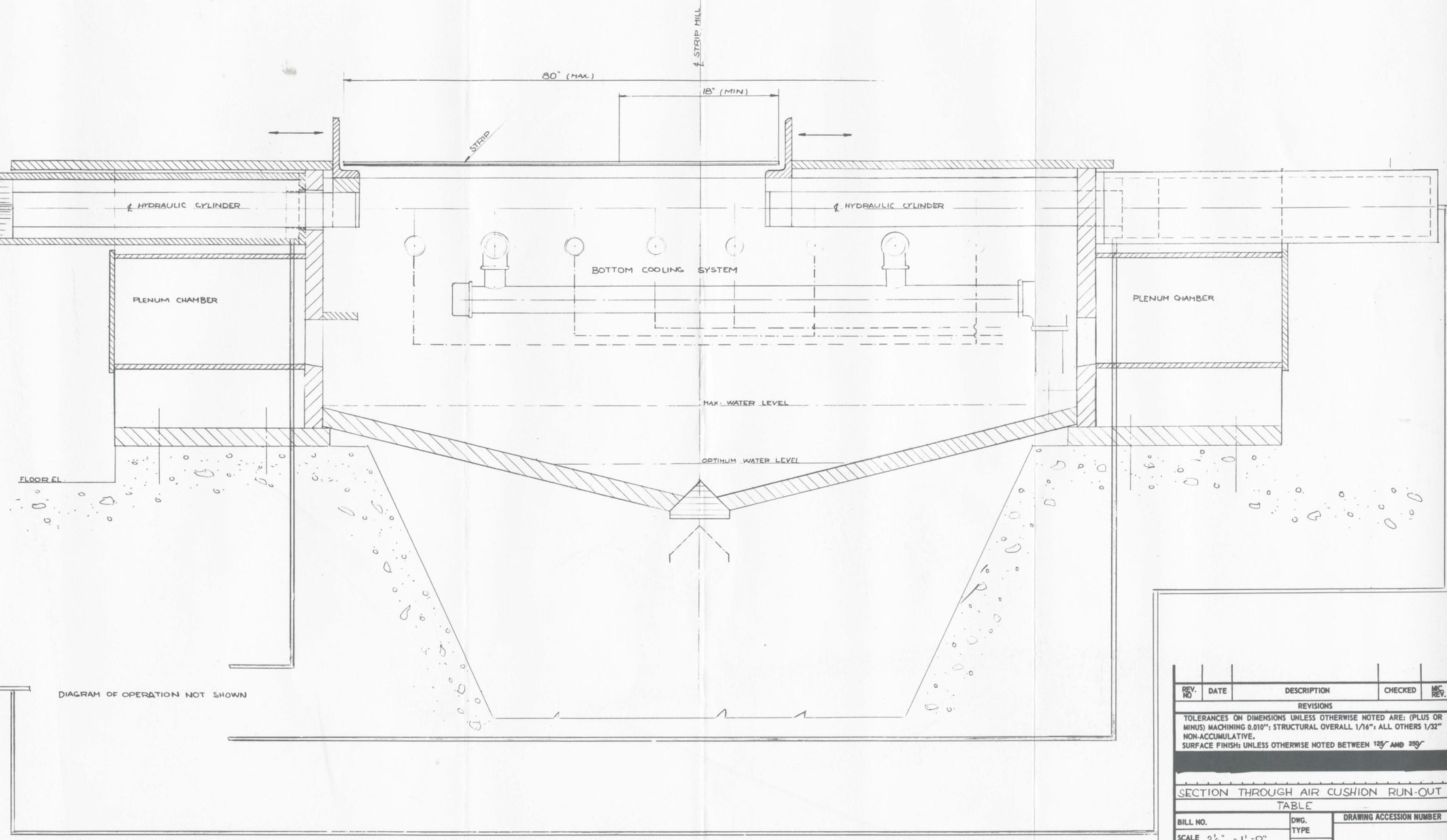

REV. NO.	DATE	DESCRIPTION	CHECKED	MIC. REV.

REVISIONS

TOLERANCES ON DIMENSIONS UNLESS OTHERWISE NOTED ARE: (PLUS OR MINUS) MACHINING 0.010"; STRUCTURAL OVERALL 1/16"; ALL OTHERS 1/32" NON-ACCUMULATIVE.
SURFACE FINISH: UNLESS OTHERWISE NOTED BETWEEN 125√ AND 250√

SECTION THROUGH AIR CUSHION RUN-OUT TABLE

BILL NO.	DWG. TYPE	DRAWING ACCESSION NUMBER
SCALE 2½" = 1'-0"	SIZE CODE 4	QUOTE THIS NUMBER FOR DOCUMENT RETRIEVAL
DATE NOV. 1970		
DRAWN H. KRATKY	FACILITY CODE	
CHECKED	DEPT. / PROCESS AREA / FUNCTION / SHEET NO.	
APPV'D / APPV'D	REFER TO THIS NUMBER IN ALL CORRESPONDENCE AND COMMUNICATIONS	

S. B. P. 10110-220-6-70

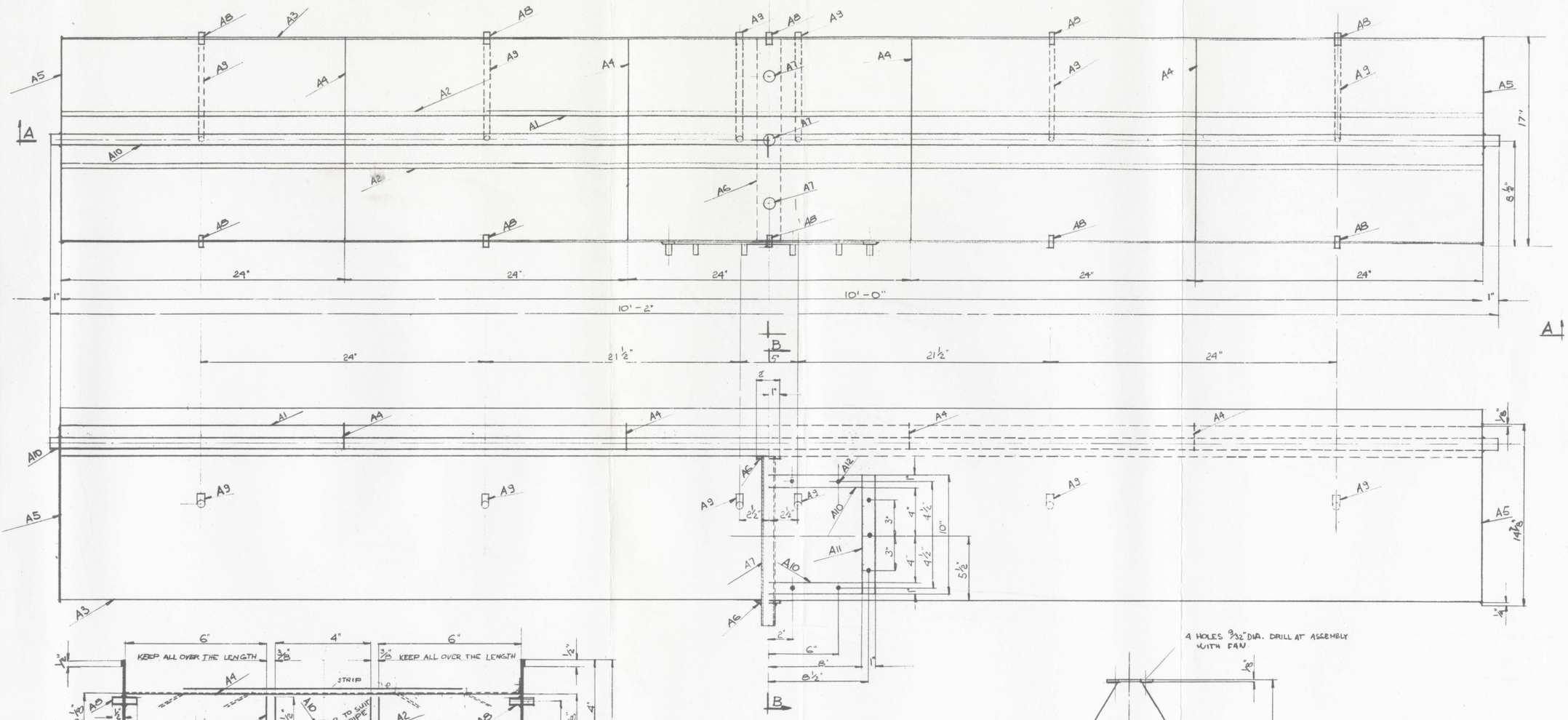

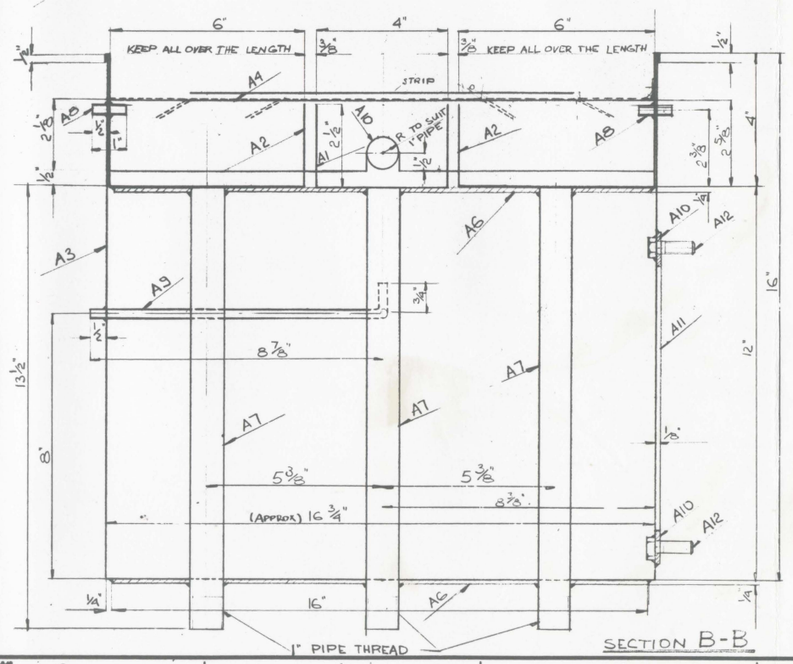

STEEL WELDED CONSTRUCTION - A

NUMBER REQUIRED	DIMENSIONS (APPROX.)	ITEM
1	9" x 1/16" x 10'-0"	A1
2	13⅛" x 1/16" x 10'-0"	A2
1	48¾" x 1/16" x 10'-0"	A3
4	2⅛" x 1/16" x 1'-4¾"	A4
2	14⅞" x 1/16" x 1'-5"	A5
2	2" x ¼" x 1'-4"	A6
3	ST'L PIPE 1" DIA. x 1'-1½"	A7
10	COPPER PIPE ¼" DIA. x 1"	A8
6	COPPER PIPE ¼" DIA. x 9¾"	A9
2	1" x ⅛" x 16"	A10
2	1" x ⅛" x 10"	A11
14	¼" N.C. x ¾" LG. BOLT WITH HEX. NUT & SPRING WASHER	A12

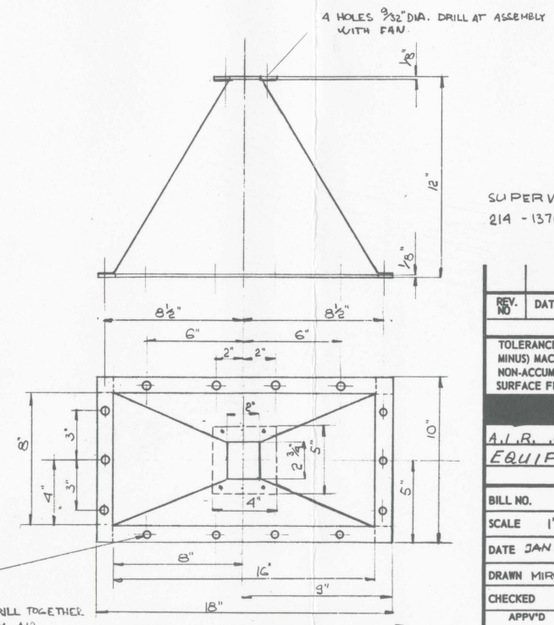

SUPERVISOR : PROF. SIDDAL

214 - 1370 - 077

REV. NO.	DATE	DESCRIPTION	CHECKED	MIC REV.

REVISIONS

TOLERANCES ON DIMENSIONS UNLESS OTHERWISE NOTED ARE: (PLUS OR MINUS) MACHINING 0.010": STRUCTURAL OVERALL 1/16": ALL OTHERS 1/32" NON-ACCUMULATIVE.
SURFACE FINISH: UNLESS OTHERWISE NOTED BETWEEN 125✓ AND 250✓

A.I.R. CUSHION TESTING EQUIPMENT

BILL NO.
SCALE 1"-0" = 3".
DATE JAN. 1970
DRAWN MIROSLAV KRATKY
CHECKED
APPV'D
APPV'D

DWG. TYPE
SIZE CODE 4

DRAWING ACCESSION NUMBER
QUOTE THIS NUMBER FOR DOCUMENT RETRIEVAL

FACILITY CODE

DEPT.	PROCESS AREA	FUNCTION	SHEET NO.

REFER TO THIS NUMBER IN ALL CORRESPONDENCE AND COMMUNICATIONS