Design of a Handheld Skin Moisture Measuring Device for Application towards Eczema

By

Scott Truong

Electrical and Biomedical Engineering Design Project (4BI6)

Department of Electrical and Computer Engineering
McMaster University
Hamilton, Ontario, Canada

Design of a Handheld Skin Moisture Measuring Device for Application towards Eczema

By

Scott Truong

Electrical and Biomedical Engineering
Faculty Advisor: Prof. Doyle

Electrical and Biomedical Engineering Project Report
submitted in partial fulfillment of the degree of
Bachelor of Engineering

McMaster University
Hamilton, Ontario, Canada
April 3, 2009

Abstract

The aim of the project is to develop a device capable of quantifying and displaying moisture content in the skin. By measuring moisture, it is possible to prevent drying and in turn, the symptoms of Eczema. In regards to Eczema, dry skin must be avoided at all times because it can cause a chain of symptoms. Therefore, the device must be portable to provide continual feedback. Skin moisture can be quantified as water content in the stratum corneum layer of the skin. Using an Inter-Digital Capacitor, the amount of skin moisture can be measured as a proportional increase in capacitance due to the dielectric properties of water. As a result, moist skin will be indicated by a large increase in capacitance while dry skin would produce a small increase. The device has the potential to improve the quality of life for those with Eczema. The theory behind my device, the hardware design, experimental results, and efficacy of the system are presented.

Key words: Eczema, Inter-digital Capacitor, IDC, skin moisture, moisture sensor, portable skin monitor

Acknowledgements

The author would like to thank Dr Thomas E. Doyle for his contributions to the project, which include getting it off the ground. Other acknowledgements extend to the Biomedical and Electrical Engineering class of 2009 at McMaster University. Every one of you were a great help whether you know it or not.

Contents

List of Tables

List of Tables

Nomenclature

Interdigital Capacitor: Inter-digitized thin strips of copper spaced less than a millimetre away as to make use of the scatterfield effect in capacitors.

Skin Moisture: the amount of water held in the stratum corneum layer of the skin by the protein keratin.

Kit: the AVR Butterfly microcontroller kit

Chapter 1

Introduction

1.1 Background

This project was completed for the partial fulfilment of the degree of Bachelor of Engineering at McMaster University 2009. The project involves a cumulative knowledge of the author's studies in his four years at McMaster. The allotted time given for the completion of the project is eight months of the academic year. Dr Thomas Doyle is the course coordinator and faculty advisor for the project. The course title is Electrical Engineering 4BI6: Biomedical Design Project; and the project is commonly known as the biomedical capstone project.

1.1.1 Project Description

Electrical Engineering 4BI6: Biomedical Design Project is briefly described in McMaster's Academic Calender [14]:

> *The design process; safety; a two term project composed of small teams of students including an oral presentation and written report.*

Although the calendar states that the projects are composed of small teams, this specific project was completed independently by the author. The title of the project is: Design of a Handheld Skin Moisture Measuring Device for Application towards Eczema, the title implies that the project involves the creation of a portable electronic device with the ability to determine moisture content in the human skin. This device will be of some benefit towards helping those with the disease known as Eczema.

1.2 Objectives

The goal of the project is to design a simple biomedical instrument capable of measuring skin moisture. There are basically only three requirements of the project:

- It must be portable (i.e. battery powered)
- It must be able to differentiate between dry and moist skin
- A display must be implemented in order to give the user feedback

Some other features of the device, not as vital but quite important none-the-less, include:

- A high sensitivity to moisture
- The feedback should be in a form that is intuitive or easily comprehensible
- The device should be easy to use and accessible to anyone
- It should be portable to the point that it could be carried in someone's pocket

The last feature maybe the most important one in the marketability and real world application of the device but this project focuses more on the proof-of-concept than the real word applicability. The objectives of this project exclude cosmetic effects, therefore the final product will not be marketable nor does it aim to be. To complete the proof-of-concept, only the three basic requirements need be fulfilled. However, the author does hope to implement some of the other features due to their importance in demonstrating the project's success.

To the best of the author's knowledge, the design of a skin moisture sensor for application specifically towards Eczema is an original idea. By designing the skin moisture sensor, the author hopes to introduce an idea or new method in the treatment of Eczema.

1.3 General Approach to the Problem

Skin moisture is commonly thought of as a qualitative measure; one might argue that skin is only described as varying levels of moist and dry. The project approaches the problem of skin moisture as a quantitative one, putting a number to the amount of moisture. Eczema attacks can be thought to be elicited by a deficit of moisture beyond a certain threshold. By quantifying moisture, one is able to moisturize the skin before it dries and thus prevent the crossing of the threshold previously mentioned. By preventing the skin moisture content from ever approaching threshold value, one can prevent the symptoms of Eczema, effectively treating the disease.

The device must be portable because dry skin can occur anytime and anywhere. A portable implementation can be achieved by avoiding the use of any external hardware such as oscilloscopes or integration with personal computers.

Chapter 2

Literature Review

2.1 Eczema

Eczema is a group of persistent skin conditions. The symptoms usually include: itching, swelling, redness, dryness, flaking, cracking, and bleeding. The most common types of Eczema are [15]:

Atopic Eczema: (aka infantile e., flexural e., atopic dermatitis) is an allergic disease believed to have a hereditary component, and often runs in families whose members also have hay fever and asthma. Itchy rash is particularly noticeable on head and scalp, neck, inside of elbows, behind knees, and buttocks. Experts are urging doctors to be more vigilant in weeding out cases that are, in actuality, irritant contact dermatitis. It is very common in developed countries, and rising.

Contact Dermatitis: is of two types: allergic (resulting from a delayed reaction to some allergen, such as poison ivy or nickel), and irritant (resulting from direct reaction to a detergent, such as sodium lauryl sulfate, for example). Some substances act both as allergen and irritant (wet cement, for example). Other substances cause a problem after sunlight exposure, bringing on phototoxic dermatitis. About three quarters of cases of contact eczema are of the irritant type, which is the most common occupational skin disease. Contact eczema is curable provided the offending substance can be avoided, and its traces removed from one's environment.

Xerotic eczema: (aka asteatotic e., e. craquele or craquelatum, winter itch, pruritus hiemalis) is dry skin that becomes so serious it turns into eczema. It worsens in dry winter weather, and limbs and trunk are most often affected. The itchy, tender skin resembles a dry, cracked, river bed. This disorder is very common among the older population.

Seborrhoeic dermatitis: or Seborrheic dermatitis ("cradle cap" in infants) is a condition sometimes classified as a form of eczema which is closely related to dandruff. It causes dry or greasy peeling

of the scalp, eyebrows, and face, and sometimes trunk. The condition is harmless except in severe cases of cradle cap. In newborns it causes a thick, yellow crusty scalp rash called cradle cap which seems related to lack of biotin[1], and is often curable.

Of the four types of Eczema listed, the most common form is Atopic Eczema and will be the focus of this project. Atopic Eczema is believed to be partially hereditary and as of today, there is no known cure. Treatment addresses the symptoms rather than the disease itself. The disease manifests itself as dry skin which sometimes leads to “cracking”; cracking is exactly as it sounds, a cracking in the layer of the skin known as the stratum corneum (surface layer). In patients with atopic eczema, or atopic dermatitis as it is more commonly known as, the lipid layer on the surface of the skin found on most people is lacking/deficient and therefore this allows allergens to slip through the cracks and elicit inflammation. Inflammation leads to itching and itching leads to scratching. Scratching in turn induces more dry skin and the cycle begins anew. This process is informally known as the itch-scratch cycle. Dry skin alone is enough to initiate the itch-scratch cycle. Once the cycle has started it can lead to bleeding and in rare cases scarring. A case of mild eczema is shown in figure 2.1 and a more severe case in figure 2.2.

Figure 2.1: a mild case of Eczema

[1] Vitamin H

Figure 2.2: a severe case of Eczema

The importance of moisturizing can not be stressed enough. Moisturizing is the primary form of self-care treatment. The moisturizer acts a substitute to the deficient lipid layer. By applying a moisturizing layer over the skin, one can prevent dry skin and cracking, thus preventing inflammation by allergens. Moisturizer effectively stops the itch-scratch cycle by eliminating the initiation. By keeping the skin moist, one affords the skin the opportunity to heal.

However, it can be difficult to assess when the application of moisture is needed. People normally only apply lotion or other moisturizing creams to their skin when it feels dry, for those with eczema this would be too late.

Currently, work is being done in ultraviolet light therapy to reduce the effects of eczema. Some of the more common forms of treatment include the regulation of environmental and dietary factors to prevent exposure to allergens.

Although in the end, the most common form of treatment is still the monitoring of skin moisture content and the application of moisturizers as necessary.

2.2 Skin Moisture Sensors

The most common methods in quantitatively measuring the skin moisture content in humans are the Bioimpedance Analysis (BIA) method and the Capacitance method. The BIA and capacitance method each have their own advantages and disadvantages and are discussed in section 2.2.2 and 2.2.3 respectively. A comparison between the two methods is given in section 2.2.4. The focus of skin moisture sensors lies in the upper most layer of the skin, the stratum corneum.

2.2.1 Stratum Corneum

The stratum corneum is the outermost layer of the skin. It is composed of dead skin cells, which eventually slough off and are replaced by the layer below, and a protein called Keratin. Keratin is responsible for the prevention of water evaporation and the attraction/absorption of water to the skin. The hydration of the skin in relation to this project refers specifically to the water content found in the stratum corneum layer of the skin. Adequate skin hydration is vital to the prevention of dry skin.

Atop the stratum corneum is the layer of dead skin cells and the body's naturally secreted oils. The oils in combination with the stratum corneum are the body's first defence against foreign invaders such as allergens. Dry skin exhibits a lack of oils and/or inadequate hydration, which results in cracking of the stratum corneum. Dry cracked skin, especially in cases of eczema, leaves the body susceptible to an attack.

Figure 2.3 shows the position of the stratum corneum in relation to the other layers of the skin.

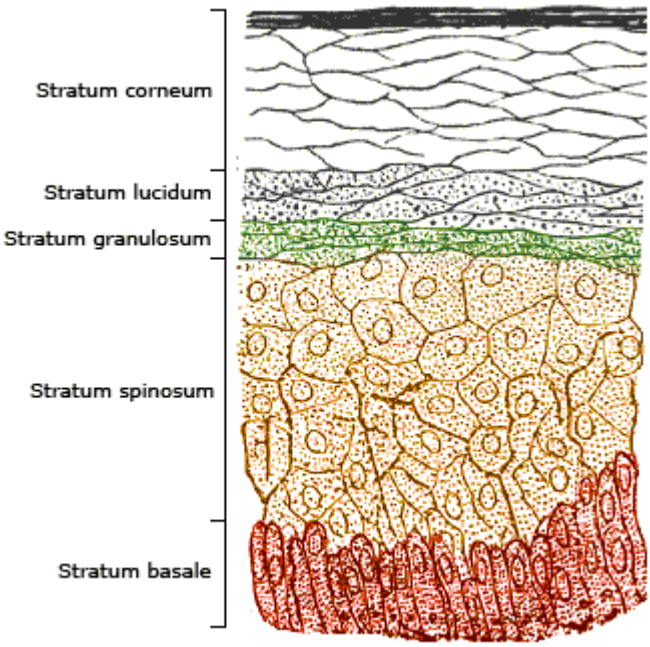

Figure 2.3: The layers that compose the skin.

2.2.2 Bioimpedance Analysis Method

Bioimpedance Analysis is a method of estimating body composition. Some types of body composition commonly measured using this method include body fat and total body water. The basic idea behind the BIA method is that an electrical impedance or opposition to electrical current flow exists through body tissues[2]. A 50 KHz current is typically supplied to the skin[3]. This impedance can be used to calculate the water content (moisture) of the stratum corneum. The top layers of skin are composed of dead skin cells, the protein keratin, natural body oils, and water. A relationship exists between the amount of oils and the amount of water in the skin and thus the impedance that fat and oils impose to electric current can be used calculate water content.

The application for a commercialized BIA skin moisture sensor is towards cosmetics. The device is small in size. It is usually about the size of a small stapler or Twinkie® snack. At the tip of the device is the transducer. The transducer consists of two protruding metal electrode rods. When placed against

[2] http://en.wikipedia.org/wiki/Bioelectrical_impedance_analysis
[3] http://en.wikipedia.org/wiki/Total_body_water

the skin, the user can turn the device on to supply a small electric current at 50 KHz. The current runs between the electrodes through the skin and the impedance is measured. Using the relationships between the various components of the skin, a quantitative measure can be determined for skin moisture as a quantity of water content.

The advantages to using the BIA includes its consistency in reproducing results, ease of use, and production of BIA skin moisture sensors is inexpensive and simple. The disadvantage of the BIA method is that it is considered to be quite inaccurate in measuring body composition. In the field of skin moisture sensing, it is not the gold standard. Advances have been made to the technology to make it more reliable, such improvements include the use of multiple electrodes that use multiple frequencies. However, the BIA method of measuring skin moisture is still not the preferred reference method.

A consumer could expect to pay approximately twenty Canadian dollars ($20 CDN) for a commercialized portable BIA skin moisture sensor device.

2.2.3 Capacitance Method

The capacitance method refers to an idea applied specifically toward the measuring of skin moisture.

A typical capacitor consists of two parallel plates and is capable of holding charge. Between the plates exists an electric field. At the edges of the plates this electric field exhibits a scattering of the field known as the “scatterfield effect”. Between the plates, a dielectric material can be placed to increase the capacity of the capacitor to hold charge. A dielectric material is usually a material with insulating properties but it can be any material with a relative static permittivity greater than ‘1’. Under the right conditions, materials with a relative static permittivity greater than 1 can concentrate electrostatic lines of flux. Material’s with this ability act as effective dielectrics by increasing capacitance. With this definition in mind, water is a dielectric.

The capacitance method treats the water content in the skin as a dielectric material. Thus, for a capacitance measuring device, the increase in capacitance

is proportional to the quantity of water in the skin. The exact type of transducer used for capacitance measuring devices in relation to skin moisture is called an “Interdigital Capacitor”. The exact details including design, theory, and application are discussed in section 2.3.

Devices for measuring skin moisture using the capacitance method come in various shapes and sizes. A commercialized device might be found at about the same size as its BIA counterpart. A commercialized device for measuring skin moisture using the capacitance method is quite accurate for its purposes as opposed to it BIA counterpart. The application for this device currently is towards cosmetics. For research purposes, one might invest in the Corneometer®, which consists of a probe about the size of a highlighter marker connected to a larger unit. At the tip of the probe is an interdigital capacitor (see section 2.3). The larger unit would be approximately the same size as a small laptop. The probe is connected to the larger unit through leads. The Corneometer® is considered the gold standard in skin moisture sensors. It is by far the most accurate device for its purpose. “Courage-Khazaka electronic” is the only company that produces the Corneometer®. It is generally used for research purposes only.

The typical consumer can expect to purchase a commercialized device for $70~100 CDN. Access to the Corneometer® is a bit more limited to researchers who can afford it. The Corneometer® costs $5200 USD; the probe alone costs $2800 USD.

The main advantage of using the capacitance method is its ability to produce results with high accuracy. The capacitance method also offers devices on extremes of the financial spectrum. A relatively inexpensive device for consumers and a highly accurate option for those who can afford it. The disadvantages include the difficulty in producing the device, its cost, and limited availability. A device using the capacitance method is quite difficult to find. There are very few companies that produce the device for public consumption.

2.2.4 Comparison

Both the BIA and capacitance method have their advantages and disadvantages. The greatest advantage the BIA method has over the capacitance method is its cost. The BIA method is an inexpensive implementation while the capacitance method is quite costly even when disregarding the Corneometer®. However, the accuracy of the capacitance method is known to be greater than that of the BIA method.

A direct assessment as to which method is better is not fair because the commercially available devices using each method are toward cosmetic application. When one considers the application of this project toward eczema, a medical condition, it becomes clear that cost becomes less of an issue and accuracy increases in importance. Medical devices and other medical related items tend to be quite costly and as such we might expect that consumers might be willing to pay more for a device with applications toward the incurable condition, eczema. With these facts in mind, this project should take on the approach of designing the skin moisture sensor using the capacitance method.

The capacitance method might be more difficult to design because devices using the method are not quite as available as those that use the BIA method. Therefore, there is less research to work from in taking the capacitance direction. The BIA method is relatively simple because it only requires two metal rod electrodes for its transducer while the capacitance method makes use of the much more complex interdigital capacitor.

2.3 Interdigital Capacitor

The Interdigital Capacitor (IDC) is the core component behind the capacitance method of measuring skin moisture. An IDC is basically thin strips of copper placed small distances apart as to utilize the scatterfield effect. The strips of copper lie on a printed circuit board (PCB) laminate. An IDC receives its name from the fact that the strips of copper act as capacitance plates capable of holding charge. Furthermore the strips are interdigitated and connected to a longer strip on one end. Figure 2.4 shows the basic structure of an IDC. The

copper strips are also known as interdigital electrodes or plates. The strips are usually placed a distance apart on the scale of tenths of a millimetre.

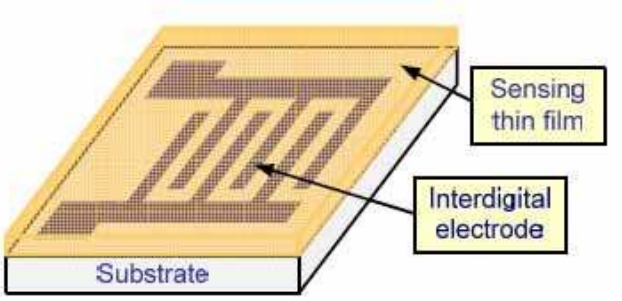

Figure 2.4: An Interdigital Capacitor (IDC)

The IDC as a whole is about a square centimetre in size. Of course, for various purposes the sensitivity can be increased by decreasing the interdigital distance. The sensitivity can also be increased by using different metals. The Corneometer® uses thin gold strips instead of copper. Building an IDC on a PCB laminate (the substrate in figure 2.4) is the preferred method in this project because it can be done on a PCB milling machine. A milling machine removes the unwanted copper and only leaves the copper shape shown in figure 2.4 as designed by the user.

There are two large squares at the end of the side strips (thicker strips that connect to the interdigital electrodes), these squares are used to attach leads.

As previously mentioned, the copper strips act as capacitance plates. In standard capacitors, an electric field exists between the plates. The electric field lines are usually straight and direct from one plate to the other. However, at the edges of the plates the electric field lines exhibit what is known as the scatterfield effect. The scatterfield effect is basically a deviation of the linear path from one plate to the other. It can be thought of as a circular or round path that extends outside the plates. The scatterfield effect is shown for two strips of an interdigital capacitor in figure 2.5. The scatterfield effect is an important concept in the design of an IDC.

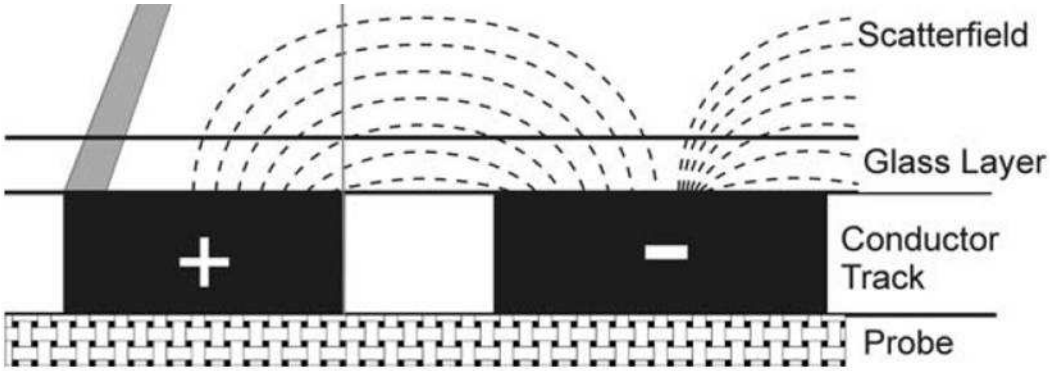

Figure 2.5: The scatterfield effect between two strips of an interdigital capacitor (IDC)

The scatterfield between the two plates or strips of an IDC penetrates the stratum corneum layer of the skin when the IDC makes skin contact. The penetration depth of the scatterfield is approximately reciprocally proportional to distance between the strips [2]. The closer the strips are, the greater the penetration depth. A microscopic distance between the strips is required in order to produce a full analysis of the entire layer of the stratum corneum. The Corneometer® is the gold standard in skin moisture analysis because it can accurately take the full depth of the stratum corneum into consideration in its analysis.

It is also noteworthy to mention that the Corneometer® uses gold strips in its IDC instead of the copper strips employed by most devices. The implications this has are discussed further in Chapter 5.

In both figure 2.4 and 2.5 a thin sensing film is found atop the electrodes of the interdigital capacitor. In figure 2.5 the sensing film is a thin glass layer. This layer is an insulating material. The insulating material serves the purpose of electrically isolating the person using the IDC from the device to which the IDC is attached. It serves a secondary purpose of preventing an electrical connection between the skin moisture and the IDC strips. Furthermore, insulating materials in presence of an electric field have the effect of acting as a dielectric to the capacitor producing the field. Therefore, the thin insulating layer has a tertiary

purpose of increasing the capacitance of the IDC. This increase of the IDC due to the insulating layer is minimal due to the thin nature of the layer.

In the measuring of skin moisture, the IDC is placed against the skin with the skin in contact with the insulating layer. The scatterfield from the strips penetrate the insulating layer and the scatterfield continues to penetrate into the stratum corneum layer of the skin. The water content found in the stratum corneum, which we define as a quantitative measure of moisture, produces a proportional increase in the capacitance of the IDC. In this sense, skin moisture is measured as an increase in IDC capacitance.

Chapter 3

Modules

3.1 Overview

The project can be viewed by breaking it into a few basic modules: a transducer, capacitance measuring circuit, signal processor, Analog-to-Digital Convertor (ADC), microcontroller, and display. The transducer is the IDC, which converts the quantity of skin moisture into a proportional increase in capacitance. A circuit to measure this increase in capacitance is thus required. The circuit we use to measure the capacitance will have an output, a raw signal that may or may not be usable. The raw signal must likely undergo some signal processing in order to be fed to an ADC. The ADC can then be connected to a microcontroller to drive a display. The display could be either a LED or LCD; in this project an LCD screen is used because it was readily available.

These modules combine to form a fully functional portable skin moisture sensor. The end result should be a device that reads skin moisture through skin contact with an IDC and the amount of moisture should appear as a number on the LCD screen.

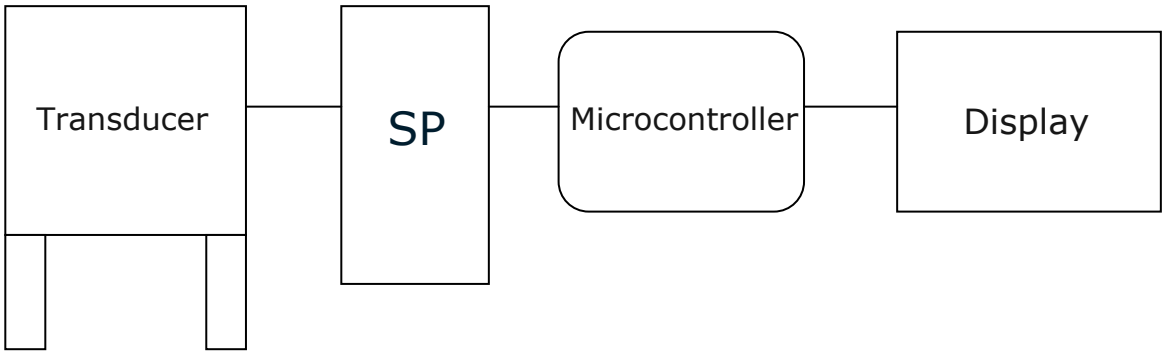

3.2 Transducer

For the project, there was a choice between two different transducers. The options were: two metal rod electrodes or an IDC. The rod electrodes correspond to the BIA method of determining skin moisture while the IDC corresponds to the capacitance method. Since the project is geared toward a medical application, it was preferable that an IDC be used for the transducer, the rod electrodes would only be used as a last resort if obtaining an IDC was not possible.

Finding an IDC transducer is quite the task. An IDC is not a part readily available in electronics catalogue; it cannot be found at Sayal Electronics or DigiKey. It is a highly specialized part and thus the only likely sources are companies that produce skin moisture sensors. Research indicates that only three companies produce skin moisture sensors using IDCs. The approach taken to find the IDC was that of a top-down approach. Starting with the gold-standard in skin moisture sensors, Courage-Khazaka Electronic was contacted via email. They responded rather quickly with a list of pricing for their products. The Corneometer® cost $5200 USD and the probe alone cost $2800 USD; the price was slightly out of the range of the project budget. Next, Multi-function Electrical Electronic Tester (MEET) International limited was contacted. MEET sells a product called the “Moistsense”. The Moistsense is produced by Moritex USA Incorporated. The Moistsense, a commercialized skin moisture sensor for cosmetic applications, can be found at approximately $70 USD from MEET. Although $70 USD is slightly more affordable it is still expensive, especially since the project only requires the IDC from the Moistsense. MEET was contacted via email to find out if they provide replacement IDCs for their products or sell them individually, unfortunately they do not. The last company to be contacted was ABC International Communications Company Limited. ABC is a Hong Kong based company that produces a device almost identical to the Moistsense. Their device is called the “Moist Sense”, which looks identical to the Moistsense by Moritex USA. After a month of poor communication on their behalf it was established that ABC would not be able to provide the project with an IDC.

Figure 3.1: The Corneometer® from Courage-Khazaka Electronic

Figure 3.2: The Moistsense from Moritex USA Incorporated

Figure 3.3: Bioimpedance Analysis (BIA) Skin Analyzer device sold by many companies in Hong Kong

Obtaining the IDC through companies was not possible. Further research resulted in the discovery of a paper that describes the testing of an IDC for skin moisture determination [10]. In this paper by Chou et al., the exact dimensions for their IDC as well as the materials used were described. After forwarding the paper to Dr Doyle, the course coordinator and faculty advisor for the project, he recommended that the Institute of Electrical and Electronics Engineers (IEEE) student branch of McMaster University be contacted. The IEEE student branch requires that the part be designed in EAGLE CAD software. The EAGLE schematic for the IDC is given below in figure 3.4.

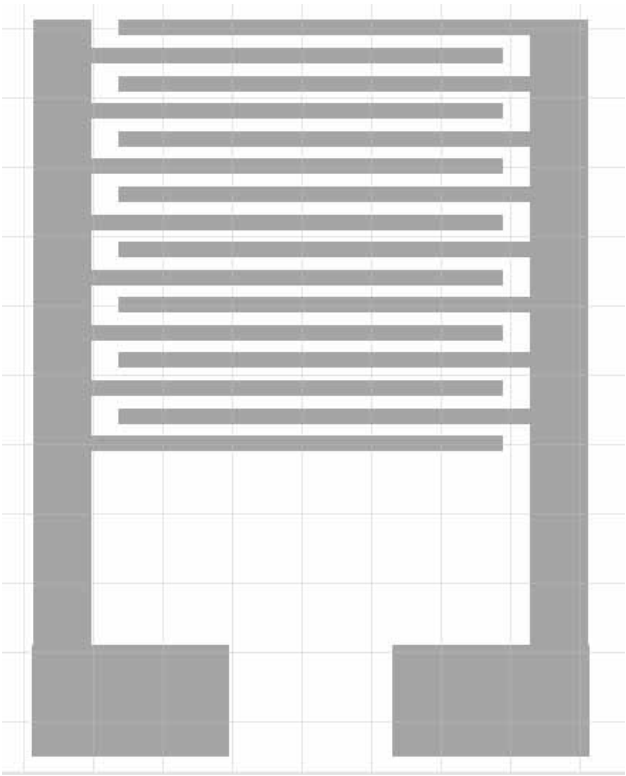

Figure 3.4: EAGLE schematic for Interdigital Capacitor (IDC) sent to IEEE student branch of McMaster University for milling

The dimensions for the part are given in table 3.1.

	Thickness (inches)	Length (inches)
Strips	0.01	0.3
Side Strips	0.045	0.53
Bottom Rectangles	0.08	0.14

Table 3.1: Dimensions of the IDC part in EAGLE

A comparison of the IDC dimensions listed in table 3.1 with the dimensions of the IDC designed by Chou et al. will show that they are very similar. The dimensions of this IDC are slightly larger than the one designed by Chou et al. The increase in size is due to the fact that the milling machine used by IEEE has limitations, it can only mill the interdigital strips to be as small as they are.

The IDC was produced using the IEEE milling machine. The milling machine is usually used to mill PCB boards by removing copper from a PCB

laminate. Using the schematic shown in figure 3.4 the machine was able to mill the shape of the IDC made of copper from a small piece of PCB laminate. The cost of milling the IDC was only $0.35 CDN; thus making this method of obtaining the IDC a much more cost effect solution as opposed to removing it from a $70 USD Moistsense device.

Using a capacitance meter purchased specifically for the project, the IDC registered a value of 1.5 pF in its raw form. An IDC is not complete without an insulating layer. A silicone over-coat pen was purchased for the project. The pen is commonly used to insulate components on a PCB board. Silicone varnish has a dielectric constant of approximately 2.8 to 3.3[4]. A very thin layer of silicone was applied to the surface of the IDC. The silicone layer was allowed to dry for 24 hours. When the IDC was measured with the capacitance meter the next day it registered a value of 2.3 pF. The increase was not by a factor of 2.8 to 3.3 as one might immediately expect but this is because the layer is thin and thus is only present in a thin portion of the electric scatterfield.

The finished IDC product is shown in figure 3.5.

Figure 3.5: The Interdigital Capacitor (IDC) printed by IEEE and coated in silicone with wire leads soldered on

[4] http://www.clippercontrols.com/info/dielectric_constants.html

3.3 Capacitance Measuring Circuit

From the IDC, it is necessary to build a circuit that can measure its capacitance. The most elementary circuit to measure capacitance would involve a means to determine the time constant, *tau* = R*C, where ‘R’ is the equivalent resistance of the circuit and ‘C’ is the capacitance of the IDC. This circuit would require that the IDC be charged (with a battery perhaps) and then it must be allowed to discharge through the circuit’s resistance. The time it takes for the IDC to fall to 0.707 times its maximum value is *tau*. The charging and discharging of the circuit would require a switch/gate controlled by a microcontroller. The voltage discharge would likely need to be fed into an ADC. The digital output of the ADC can be used in combination with a timer to allow the microcontroller to determine discharge time. In theory this elementary idea sounds quite simple but the problem with this approach is that it requires that the circuit be very precise. The IDC has a capacitance on the scale of picofarads and thus would charge very quickly and discharge just as quickly. A microcontroller with a very high clock frequency and fast timer would be required. The circuit would undoubtedly be very sensitive.

Research into capacitance measuring circuits built by others and readily available on the internet was required. Among the different candidates for this module one proved to be the most promising. The *Add-on Capacitance Meter* by Mitchell is a circuit that can be used with an analog voltmeter to measure capacitance [12]. The circuit produces a square wave output. The output is not a clean square wave but when it is attached to an analog voltmeter it has the effect of moving the voltmeter needle to a point between 0 and 10 volts. 0 volts corresponds to 0 pF while 10 volts corresponds to 100 pF. The circuit designed by Mitchell has an extra functionality; by turning a knob on the circuit it can change the correspondence between capacitance and voltage. What this means is that the 0 to 10 V scale can correspond to another scale of capacitance (i.e. 10 pF to 1 nF). This extra functionality was not necessary because the IDC has a capacitance on the scale of picofarads, thus the extra functionality was removed

for the purposes of this project. The circuit as designed by Mitchell is shown in figure 3.6. The circuit diagram for Mitchell's circuit is given in figure 3.7.

Figure 3.6: The Add-on Capacitance Meter by Mitchel, C.

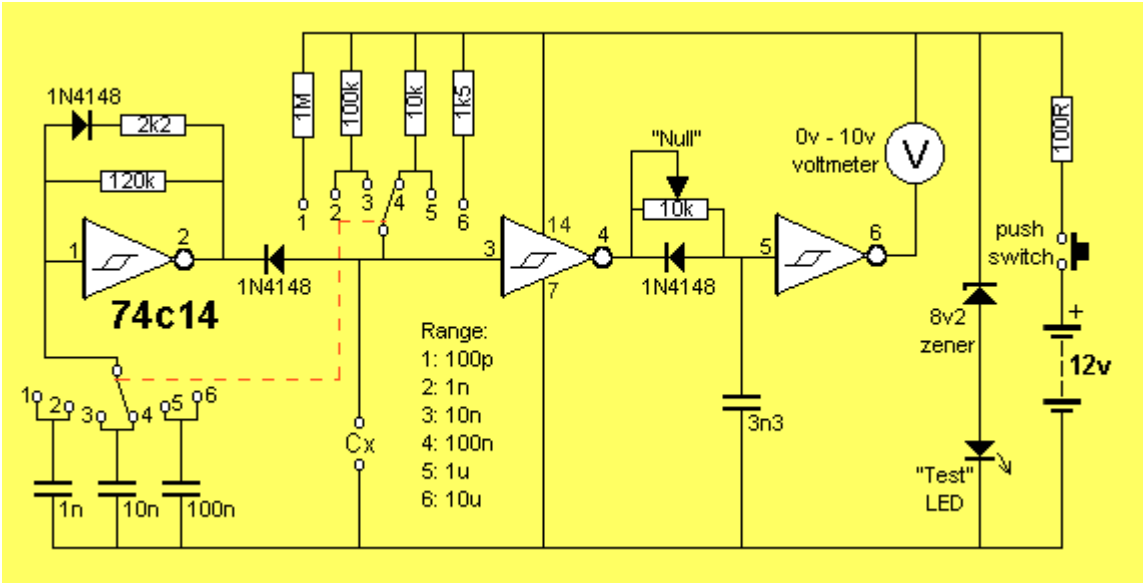

Figure 3.7: Circuit schematic for Mitchell's capacitance meter

The circuit relies heavily on a specialized chip called the 74C14 Hex Schmitt Trigger. The circuit works by charging up the test capacitance to 70% its value. Up until this point the charging is fairly linear. The 120k resistor and 2k2 diode combined with the chip's internal oscillator work to divide charge time into

100 units. What this means is that a 100 pF capacitor will take 100 units of time to charge, a 1 pF capacitor will take 1 unit of time to charge, and a 45 pF capacitor will take 45 units of time to charge to 70% its maximum value. One unit of time corresponds to approximately 1.014 µs. For each unit of time that is not spent charging the test capacitance (i.e. 23 units of time will not be spent charging a 77 pF capacitor) the output at pin 4 of the Hex chip will be low. A low output at pin 4 has the effect of allowing the fully charged 3n3 capacitor to discharge for the amount of time corresponding to the units of time pin 4 remains low. The remaining charge on the 3n3 capacitor is fed to pin 5 and the output is taken between pins 6 and 14. An unclean square wave is the output fed to the voltmeter. The remaining charge on the 3n3 capacitor is translated into a proportional time in which the square wave remains high (i.e. its duty cycle). For example, a 77 pF capacitor will produce a square wave output with 77% of its duty cycle HIGH and 23% of its duty cycle LOW. The HIGH of the signal is 10.15 V and LOW is 8.859 V.

Unlike Mitchell's circuit, the circuit used for this project is permanently set to the range of 1 to 100 pF, where 100 pF is the upper limit. Therefore, the 1 MΩ resistor and 1 nF capacitor are used.

The output at pin 4 naturally drops LOW for an extra unit of time every cycle. The 10k pot trimmer and diode together have the effect of eliminating this default LOW time so that when no test capacitance is used the output signal indicates 0 pF instead of 1 pF.

The "test" LED is used only to indicate to the user when the circuit is being used. A 12 V battery is used and the battery life must be conserved, therefore a push button is used to connect the battery to the circuit only when it is in use. However, it is difficult for the user to hold the push button down while manipulating the transducer to make skin contact. Therefore, the push button in Mitchell's circuit is replaced with an on-off switch for convenience purpose. The use of an on-off switch, however, does result in unnecessary draining of the 12 V battery.

Full details on the functionality of Mitchell's circuit are provided on his website [13].

When no test capacitance is used, the output signal from pins 6 and 14 appears as a very messy DC signal. On an analog voltmeter a zero test capacitance would correctly correspond to 0 V but an ADC and microcontroller may not have as easy a time reading the messy signal as zero. The first few picofarads suffer from similar signal distortions. By adding a 15 pF capacitor in parallel with the IDC this problem can be avoided. The IDC has a capacitance value of only 2.3 pF and one can expect that the capacitance will only increase to maybe 6 pF greater than that value when pressed against human skin [10]. The small increase means that the full 100 pF range of the measuring circuit will not be used. Therefore, the addition of the 15 pF capacitor does not limit the maximum measurement that can be taken with the skin moisture sensor.

A circuit schematic as drawn in EAGLE is given in figure 3.8 and the actual circuit as built on a breadboard is given in figure 3.9.

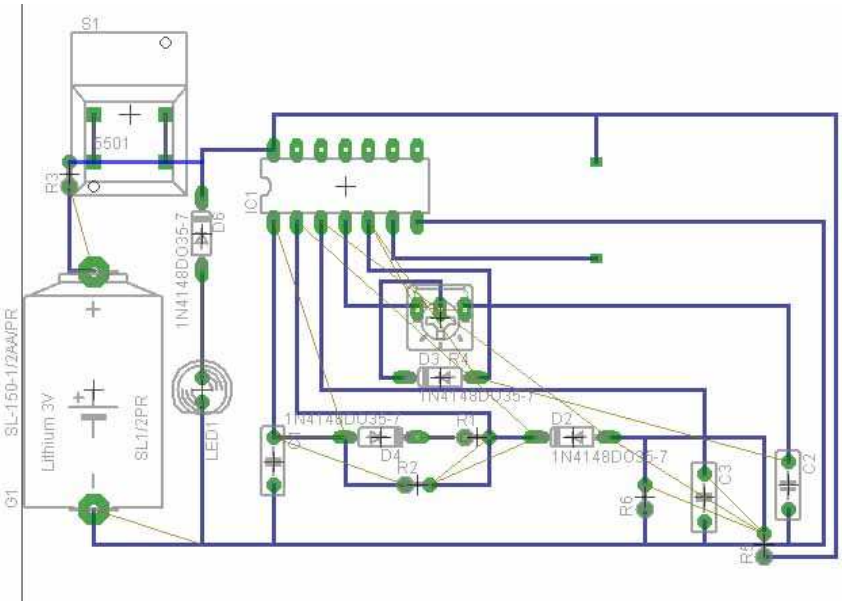

Figure 3.8: EAGLE schematic for capacitance circuit used in project

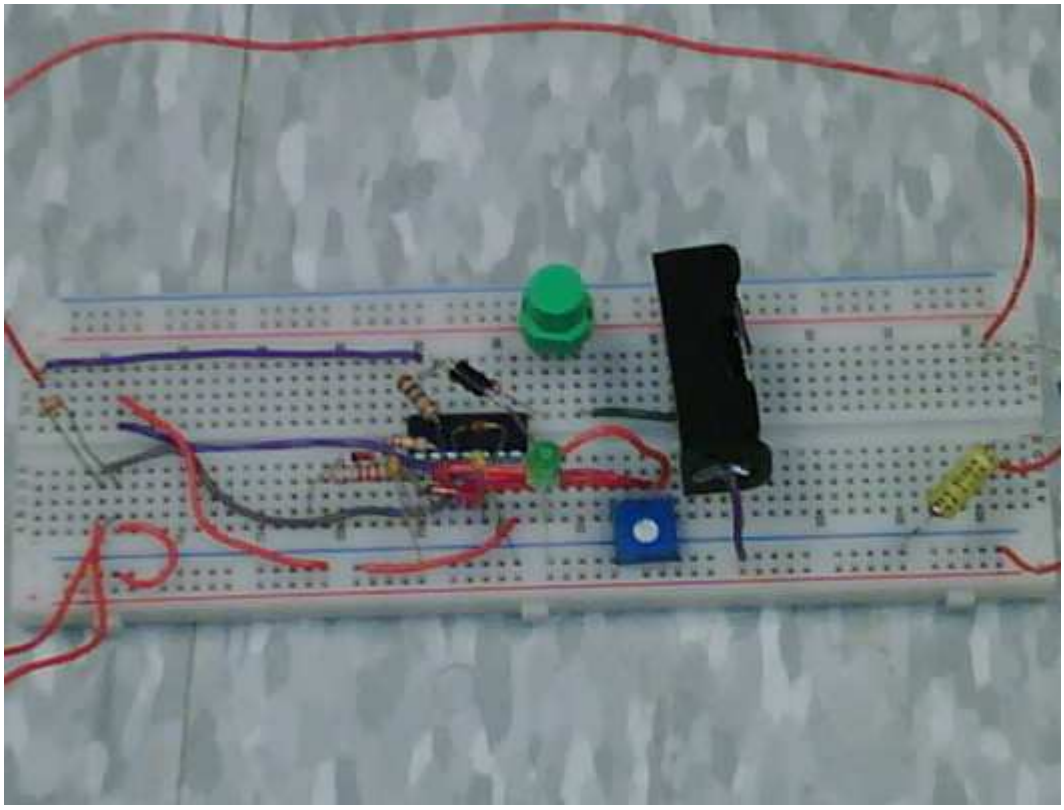

Figure 3.9: The capacitance circuit built on a breadboard

3.4 Signal Processing

The raw signal from the output of the capacitance circuit is a messy square wave with a period of 98.80 microseconds. One method of processing the signal would be to convert the signal to its digital equivalent through the use of an ADC. The signal can be sampled at a frequency of 10 MHz and a microsecond timer can be used to time the duty cycle of the signal. The duty cycle is proportional to the test capacitance used to produce the signal. However, this method is not realistic or feasible. To be able to sample a signal at a frequency of 10 MHz with satisfactory accuracy would require an oscilloscope and although a microsecond timer can be purchased, if incorporated, the device would be extremely sensitive and likely inaccurate. This method would be the equivalent of a “brute force” solution to the problem.

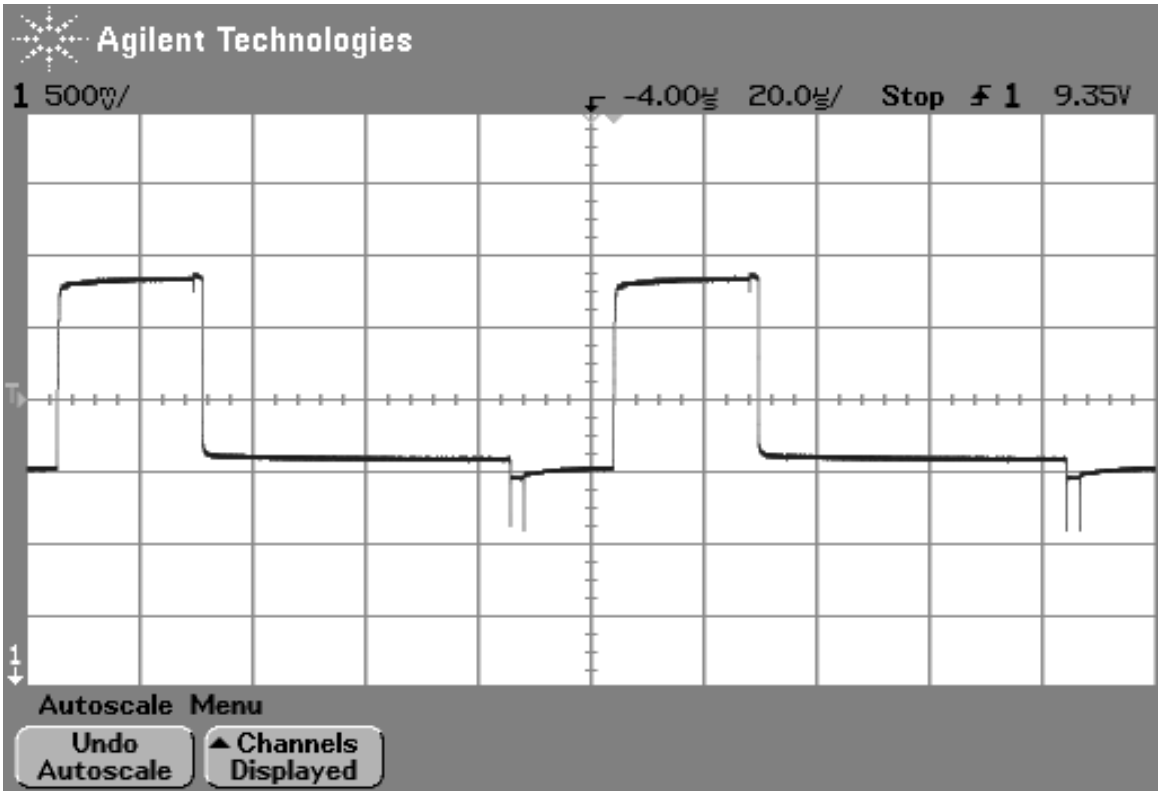

Figure 3.10: Raw square wave output from capacitance measuring circuit. Taken from an oscilloscope

A much more convenient and simple way of processing the signal would be to completely filter the high frequency components from the signal. The raw signal is a square wave. The duty cycle of the square wave is directly proportional to the capacitance of the IDC. Therefore, by removing the high frequency components of the signal a DC signal is obtained with an amplitude that is directly proportional to the duty cycle. This result is important because it allows for sampling at a much lower frequency. The filtered signal is a DC signal and theoretically should not very with time, in actuality the simple first order low-pass filter implemented does leave some residual frequency above 0 Hz but this is negligible. A DC signal can be sampled with as low a frequency as desired, for example, it can be sampled at 1 Hz, which would produce a data update for the user every second. A 1 Hz sampling rate, although feasible, is slow; especially since much faster sampling rates are conveniently available and easy to

implement with the ADC used in this project. The sampling rate is addressed in section 3.5.

In order to obtain the DC signal a low-pass filter must be built. Since there are no specific reasons why a high quality filter must be used, a simple first order filter will suffice. The first order low-pass filter implemented uses a resistor of 1 MΩ and a capacitor of 1 μF thus giving an effective cut-off frequency of approximately 0.16 Hz according to $2\pi F = 1/RC$, where F is the cut-off frequency.

3.5 Microcontroller Kit

A microcontroller is almost essential to every project. The end result of this particular project requires that a display be driven to show the moisture quantity as a numerical value. What this project requires of a microcontroller is the ability to read digital bits from an ADC and to convert the data into a form that will drive a display to show a normalized version of the digital data. For these purposes, almost any microcontroller will do. The choices between different microcontrollers and docking modules are limitless. There is also a choice as to whether or not to build the circuit around the microcontroller or to just purchase a microcontroller kit/docking module. Fortunately, all the choices were cut short when it was recommended by a colleague that the project incorporate the AVR Butterfly microcontroller kit.

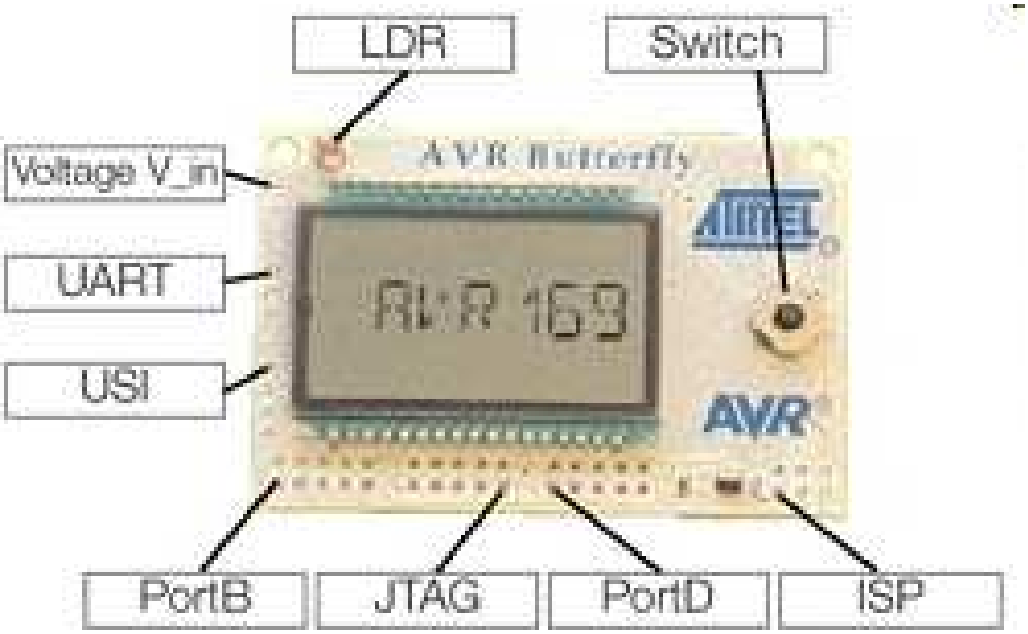

Figure 3.11: The AVR Butterfly microcontroller kit

The AVR Butterfly microcontroller kit literally has everything this project needs. It has an ADC converter built in, labelled as *Voltage V_in* in figure 3.11, an LCD screen, and it can be powered by two 1.5 V AA batteries; conveniently the most common battery available to the public thus increasing the market feasibility of this project. Without the AVR Butterfly microcontroller kit, a separate ADC would need to be purchased and a circuit would have to be built around the microcontroller to incorporate the ADC and LCD screen. Building the external circuitry and purchasing a different microcontroller might have reduced the project budget if the AVR Butterfly microcontroller kit was particularly expensive but it is not. At $20 CDN from digikey.com Canada, the AVR Butterfly Microcontroller kit is by far the best option for the project.

Another convenient feature of the kit is that it is fully programmable in both C and assembly. The code written for this project was chosen to be written in C. The full code can be found in Appendix A. This section is reserved for discussing the function/purpose of each line of code in the main body.

```
ADCSRA |= (1 << ADPS1);
```

This first line sets the sampling rate to 4MHz, which is exponentially larger than what is necessary but this assures that there is no data lag when the sampled value increases due to the presence of moisture. In other words, this allows for the most up to date data possible to be available for display.

```
ADMUX |= (1 << REFS0);
```

This line simply tells the microcontroller to take data from the ADC port (*V_in*) of the kit.

```
ADMUX |= (1 << ADLAR);
```

The microcontroller stores ADC data as a 10 bit value in two 8 bit registers. This requires reading of the ADC data from two different registers to obtain one ADC value. This line of code adjusts the reading frame so that ADC data is represented as an 8 bit value in one register, the *ADCH* register.

```
ADMUX |= (1 << MUX0);
```

The ADC on this kit allows for multiple channels, this project only requires one ADC input and therefore any channel will suffice. This line indicates channel one is selected.

```
ADCSRA |= (1 << ADEN);
LCD_Init();
```

These two lines simply mean: turn on the ADC and LCD screen or enable them.

```
while(1)
```

An infinite duration while loop is implemented to produce continuous readings while the device is on.

```
ADCSRA |= (1 << ADSC);
```

Do an Analog to digital conversion.

```
num = ADCH;
num= num – 86;
count=0;
```

Store the 8 bit ADC data stored in *ADCH* to a variable *num* and initiate variable count to 0 for reasons that will be clear later in the code. The variable *num* takes on a value less than *ADCH* by 86 because the default start up value of the ADC data is an integer value of 86. This random value of 86 is the result of the natural DC offset of the raw output square wave, the 15 pF capacitor influencing the duty cycle, and the natural capacitance of the IDC, which also influences the duty cycle of the square wave. The effect of removing 86 from the *ADCH* produces a final value of 0 on the display when the device is turned on and the transducer is exposed to just air.

```
itoa(num,buffer,10);
```

The value stored in *num* needs to be converted into its string format equivalent so that the LCD screen can properly display it.

```
sei();
```

Initializes interrupts, which can be used through pushing the analog button on the board of the kit. Interrupts can be used to reset the microcontroller kit or to turn it off.

```
while (count<10)    {
        LCD_puts(buffer, 1);
        LCD_Colon(0);
        count++;}
```

This loop displays the data from *num* for an iteration of 10 increases of the variable *count*. This serves the purpose of producing a screen refresh rate of just under one refresh per second.

```
LCD_Clear();
LCD_UpdateRequired(TRUE, 0);
```

The last two lines of code serve the purpose of clearing the LCD screen after 10 increases of the variable *count* and to tell the LCD screen that there will be new

data available soon. After these lines are run the code returns to the top of the infinite while loop previously mentioned.

To use the AVR Butterfly microcontroller kit a programming environment needs to be installed on a computer. This requires two parts, *WinAVR-20081205-install.exe* which can be found with a simple Google search or on AVRfreaks.com, and the *AVR studios* programming environment, which can also be found on AVRfreaks.com. This will provide a computer with the necessary definitions in C, an environment to work in, and a means of downloading the code into the microcontroller. Downloading the code into the microcontroller is physically realized through a serial port connection from the computer to the *UART* pins of figure 3.11. Since serial port connections are not commonly found on laptop personal computers, a serial-to-USB cable can be purchased at any local electronics store for about $20 CDN. A serial-to-USB cable was purchased for use with this project. Research indicates that using a serial-to-USB cable is commonly met with difficulty but this project encountered no such difficulties.

As previously mentioned, the AVR Butterfly microcontroller kit uses two AA batteries. The leads from the battery holder can be connected to the two pins in the last column of *PORTD* labelled in figure 3.11.

The analog switch labelled *SWITCH* in figure 3.11 is used to toggle the AVR Butterfly microcontroller kit on and off. It can also reset the device to its initial state. Additionally, the switch can be used to initiate interrupt routines.

The overview of the use of the kit is as follows: the kit is turned on by flipping the switch upward. At this point in time, the ADC begins to take samples from the output of the capacitance measuring circuit, a DC signal. Data from the ADC is fed to the microcontroller which removes the offset value of 86. The ADC data is then converted by the microcontroller into a form (string format) usable by the LCD screen. The microcontroller is then responsible for refreshing the LCD screen for continuous updating of ADC data. When exposed to air the LCD screen should continually display a value of 0 when refreshing. When the transducer comes in contact with moisture, the DC value of the processed

capacitance measuring circuit output will increase. The continually updating LCD screen will display this new data with the next update of the screen. When the moisture source is removed from the transducer, the LCD screen will return to a value of 0 and remain there until a new source of moisture is present.

There are a lot of features available on the AVR Butterfly microcontroller kit that makes it an amazing device. However, this project requires very few features of the kit, hence only those that were used are discussed.

Chapter 4

Results

4.1 Project Cost

This section details the project cost in terms of Canadian dollars. The costs are all approximate values. All items are listed whether they were incorporated into the project or not; items that were compromised or failed during the course of the project are also included. See table 4.1.

Item	Cost
Breadboard	$15
Interdigital Capacitor	$0.35
Resistors, capacitors, diodes, Hex Schmitt chip, etc.	$20
Capacitance meter	$45
Silicone pen	$11
Battery holder + 12 V battery	$4
AVR Butterfly Microcontroller kit	$30
Serial-to-USB cable	$20
Printed Circuit Board	$10
AVR Butterfly Microcontroller kit accessories	$20
Total	$175

Table 4.1: An approximate tabulation of project costs in Canadian dollars

The cost shown in table 4.1 is unusually high for a project this size. This is due to the fact that the table includes items purchased for the project that are not included in the final product. For example, the capacitance meter purchased was solely for the purposes of report writing and to confirm that the device was in working order. Other costs such as the PCB version of the capacitance measuring circuit was included but was not incorporated into the final product. The PCB version of circuit did not include a grounding plane in its design and thus did not work as the circuit did on a breadboard. Due to the time constraints on the project a second PCB version of the circuit was not produced because it was deemed unnecessary. The items also include their respective price of shipping in the costs found in table 4.1.

If a second portable skin moisture monitoring device were to be built at this stage it would be possible to build it for under $60 CDN.

4.2 Module Data

As mentioned in Chapter 3, the interdigital capacitor has a capacitance value of 2.3 pF, which is accurately reflected as an increase of approximately 2% in the duty cycle of the raw square wave output (figure 3.10). A simple test to assure proper working order of the transducer and its correct incorporation into the capacitance measuring circuit is to check for a correlation between the values given by the capacitance meter and the output of the capacitance measuring circuit. When the interdigital capacitor is applied against human skin, the capacitance measuring circuit registers an increase of approximately 5 pF for the skin under the forearm. An increase in 5 pF should necessarily correspond to an increase in the raw output square wave duty cycle by 5%, as it turns out this is true.

The properties of raw output square wave are worth mentioning. Referring again to figure 3.10, it can be seen that the square wave is not perfect and features ripples at the edges. These ripples need not be removed because the effects they have on the duty cycle are negligible especially since the end result is a relative scale, this is to be discussed further in section 4.3. The square wave

peaks at 10.15 V and remains low at 8.859 V. The value of the low part of the cycle does not include the ripples and therefore is technically not the minimum. In other words, if the square wave were perfect it would oscillate between 10.15 V and 8.859 V. As mentioned in Chapter 3, the period of the square wave is 98.8 µs and therefore each percentage of duty cycle or each picofarad corresponds to 9.88 µs. The signal, when filtered is simply a DC signal. The properties of the square wave signal limit the DC signal to a minimum value of approximately 8.86 V and a maximum of 10.15 V. Between its maximum and minimum value, the DC signal can take on incremental values of 12.9 mV, this is the difference between the maximum and minimum with the difference divided by 100. However, the previously mentioned properties of the DC signal are only valid for a perfect DC signal (i.e. 0 Hz). Also, the square wave itself is not perfect. One must take into account the effects of the excess frequency components. The contributions of the excess frequency components above DC (0 Hz) are given by the Bode plot for a first order low-pass filter, see figure 4.1.

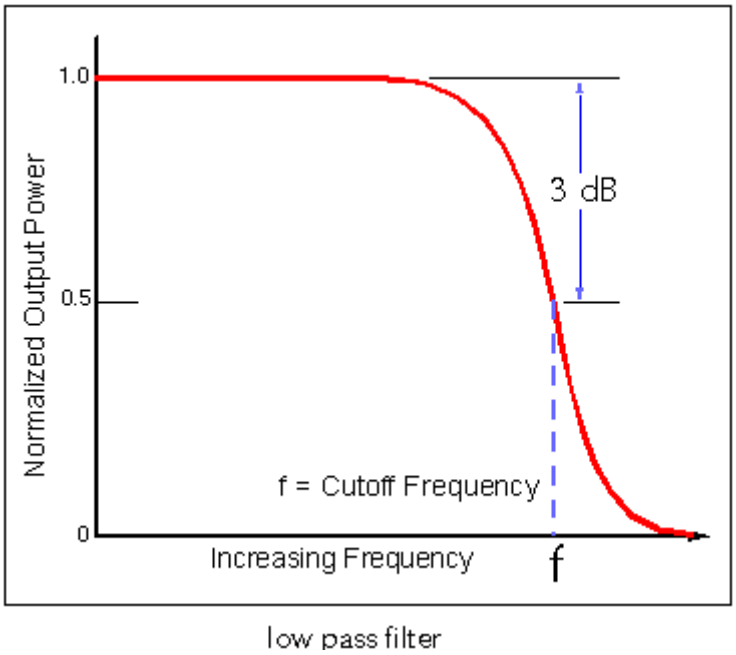

Figure 4.1: Bode plot of the frequency response for a first order low-pass filter with a cut-off frequency ‘f’

The contributions of the excess frequency components are difficult to determine mathematically but they can be measured. With the 15 pF and IDC together used as the test capacitance, the output of the capacitance measuring circuit after filtering produces a DC value of 8.40 V as measured by a multimeter. This final result is much lower than the minimum value of 8.86 V originally predicted with an ideal DC signal despite the fact that a 15 pF capacitor and IDC were used to establish the measurement. This deviation for the expected value is irrelevant in the end because the final product produces a scale that is relative due to the fact that the device measures an increase in capacitance of the IDC proportional to moisture content.

Because the DC signal was obtained through use of a first order low-pass filter with a cut-off frequency of 0.16 Hz, we might expect that the signal is unable to change quickly with time. Therefore, when the interdigital capacitor is applied to the skin it may instantly increase the capacitance of the IDC but this increase will not be seen in the DC approximation signal right away. With the excess frequency components it may take up to 5 seconds to update the device with the corresponding data. The time it takes to produce results is proportional to the increase in capacitance. This means that moist skin will take a relatively longer time to produce results while dry skin will produce results faster. However the difference between the readings is only about 5 seconds maximum and realistically this is not a long wait period at all.

The AVR Butterfly microcontroller kit's ADC is set up to use 8 bits instead of its default 10 bit setting in this project, see Chapter 3. A binary value of 00000000 correspond to 0 V, the minimum value the kit will accept, while the binary value 11111111 corresponds to the maximum value the ADC will accept without frying the board. When the kit is turned on it initializes with an ADC value of 86 corresponding to its decimal equivalent of the 8 bit binary sample. The 15 pF capacitor and IDC used in this project produce the decimal value of 86. From measurements with a multimeter, it is known that the 15 pF and IDC together produce a DC value of 8.40 V. Therefore the sample value of 86 must correspond

to 8.40 V. This leads to the conclusion that every decimal value increase of 1 must correspond to 0.098 V. The final value displayed on the LCD screen must be normalized because the number 86 is not intuitively satisfying. Although the purpose of the project is to establish a proof of concept for the device, it would be beneficial to make it as commercially feasible as possible where it is easy to do so. Thus the final value of the LCD display must be normalized. To normalize the display it is a simple matter of subtracting 01010110 (86 in binary) from the *ADCH* register of the ADC. The final result is that the device will initialize with a display of 0 corresponding to the transducer being exposed to just air.

4.3 Sensitivity

When the device is turned on it initializes to a display value of 0 corresponding to the transducer being exposed to air. A range must be determined in order to give the results any meaning. Naturally, the highest value displayed will correspond to 100% moisture. Therefore, dipping the IDC into a glass of water will determine the maximum value the device will obtain. The submerging of the IDC into water produces a reading of 12.

It is reasonable to assume that human skin is most moist when sweat is present or moisturizing cream has been recently applied. To determine the maximum moisture level of skin, moisturizer was applied to an already moist area of skin. After allowing the moisturizer to be absorbed by the skin for some time a measurement was taken using the device. Surprisingly the LCD displayed a value of 12, a value equivalent to the one found in the experiment involving the submerging of the IDC into water. The results indicate that the IDC has a maximum capacitance and this threshold is reached when the IDC is exposed to skin in its most moist state.

Other areas of moist skin produce results in the range of 10 to 12. Such areas include finger tips, under the forearm, and the biceps. The areas of especially dry skin produce results in the range of 1 to 3. Such areas include the back, knees, and the back of the neck. Additionally, dry skin can be intentionally induced. Eczema can be simulated by scratching any area of skin to cause it to

dry. A long hot bath can cause skin to dehydrate, especially at the finger tips. Simulated drying conditions of the skin all produce results in the range of 1 to 3. Areas of skin that are not dry or particularly moist are found in the range of 4 to 9.

The values given by the device from 0 to 12 provide a means of quantifying skin moisture. As a result of this quantization it is possible to use this device in the treatment of Eczema. A value of 1 to 3 indicates the presence of dry skin. In patients with Eczema, a value within this range would mean that the skin has likely initiated the itch-scratch cycle mentioned in Chapter 2. A value of 4 to 12 is a good indicator that the skin is currently safe from the initiation of the itch-scratch cycle. A patient using this device should ideally apply moisturizer to area being measured as the value drops from 9 toward 4. As long as the area being measured does not ever reach a level of moisture corresponding to a value of 1 to 3 on the device the itch-scratch cycle will not be initiated and the symptoms will not manifest. In this way, the device will effectively treat Eczema. Application of moisturizer will likely restore the skin moisture to a level corresponding to a value of about 12.

Value	Diagnosis
1 to 3	Dry skin - manifestation of Eczema related symptoms
4 to 9	Skin safe from itch-scratch cycle, apply moisturizer as value approaches 3
10 to 12	Moist skin - skin is in no danger of exhibiting symptoms, application of moisturizer is not necessary

Table 4.2: Range of values for the portable skin moisture sensor and corresponding diagnosis

4.4 The Final Product

The final product is shown in figure 4.2.

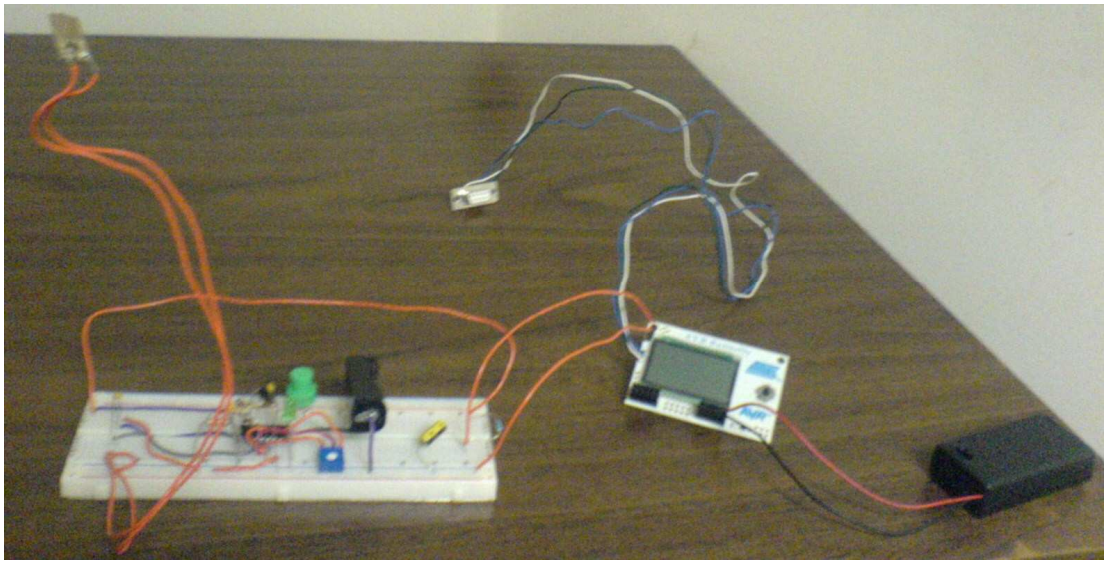

Figure 4.2: The portable skin moisture measuring device for application toward Eczema – the final product of this project

As one can see, the device is completely portable through the use of three batteries (two 1.5 V AA batteries and one 12 V battery). It can differentiate between moist skin, dry skin, and varying levels in between. In hindsight, the project does achieve its goals. The final product is a working proof-of-concept device capable of measuring skin moisture to produce a scale of 0 to 12 anywhere and anytime, which is absolutely necessary in the treatment of Eczema.

Chapter 5

Discussion

5.1 Future Work and Comparisons

Although this project manages to complete its proof-of-concept goal it falls short of being a commercially viable product. Perhaps the project's largest pitfall is the fact that although it may be portable it is not a handheld device. The device currently consists of components connected to a breadboard and a microcontroller kit. The AVR Butterfly microcontroller kit, although relatively small in comparison to other microcontroller kits, is still unnecessarily large. The project only requires that the microcontroller read ADC data and display results. The LCD screen on the kit is also unnecessarily large. To make the device practical it must be minimized in size as much as possible. This can be accomplished by mounting the much smaller integrated circuit counterparts of the breadboard components to a printed circuit board. This PCB must also connect the components that make up the capacitance measuring circuit to an ADC. A microcontroller should be found on the PCB further connected to the ADC. The microcontroller should drive a much smaller LCD or LED screen, which could be about a square centimetre in size. The final product would be approximately the same size as an electronic home pregnancy test and oddly enough it would probably look the same as the pregnancy test as well. The drastic reduction in size from components on a breadboard to integrated circuit components on a PCB is almost vital to the practicality of the project. The reduction in size from using just the necessary components as opposed to an entire microcontroller kit is also noteworthy; this reduction is brought about by removing all unnecessary

accessories of the kit including the ability to determine temperature, multiple channel inputs, timers, etc.

It is tempting to question the purpose of this project at all, especially when similar devices such as Moritex USA's Moistsense device exist, see figure 3.2. The Moistsense device is also a portable skin moisture sensor. In addition to it being portable, the Moistsense is also conveniently small and thus is a handheld device. Similarly to this project, the Moistsense device also uses the capacitance method of measuring skin moisture using a form of interdigital capacitor. As opposed to the scale of 0 to 12 this project can produce, the Moistsense produces a scale from 0 to 100. These facts beg the question as to why the Moistsense cannot be used for application toward Eczema. It should be stated at this point that the answer is that it cannot. The Moistsense was created for cosmetic application. The low end of its scale corresponding to dry skin does not correspond to the level of dry skin that can be reached in a patient with Eczema. This cosmetic device is commonly used on the face and is designed to assist with the application of various make-up products. Patients with Eczema commonly manifest their symptoms on the arms and legs; manifestation of Eczema on the facial regions is not as common. In terms of the Moistsense, the level of dry skin reached by the facial regions may be an adequate level of moisture for the arms and legs.

Although the Moistsense does use a form of interdigital capacitor, the quality of this IDC is questionable. The surface area of the transducer is quite small, much smaller than the IDC used in this project. As seen with the experiments in Chapter 4, the capacitance of an IDC is limited. With a smaller IDC the maximum capacitance would be farther limited. However, the limit of the capacitance can be increased slightly by decreasing the space between the interdigitated strips of the IDC [7]. The spacing between the interdigital strips of the IDC used in this project was limited by the capabilities of the milling machine used by IEEE to produce it. The maximum capacitance and range of project could have been increased by adding more strips to the IDC or by making the strips themselves longer.

As mentioned in Chapter 2, the gold standard in the field of skin moisture analysis is the Corneometer®. The Corneometer® is by far the most accurate tool in the diagnosis of skin moisture. The distance between each strip is microscopic and the strips themselves are incredibly thin. To the naked human eye the surface of the Corneometer® IDC would look like a plain flat surface. The distance between each strip can only be seen with a magnifying glass. The microscopically spaced strips are made of gold instead of copper. Research indicates that gold is best material to use in the production of interdigital capacitors [2]. The Corneometer® was specifically designed to produce a scatterfield that would exactly penetrate the depth of the stratum corneum layer of the skin. The stratum corneum layer of the skin differs from different surfaces of the body. For example, the palms have a particularly thick layer in comparison to other surfaces of the body. The features of the Corneometer® allow for the adjusting of the scatterfield to properly penetrate the stratum corneum layer of various areas of skin, no more and no less. However, for application toward Eczema this feature is not necessary because Atopic Eczema rarely attacks areas such as the palms or soles of the feet where skin is particularly thick but rather it attacks areas such as the neck, behind the knees, arms, inside of the elbows, and legs where skin maintains somewhat of a consistency in thickness. Features such as adjusting the penetration depth of the scatterfield are not necessary in this project and so it requires no further work in this respect.

Obtaining the best possible transducer is the most important part in this project. If this project is to reach its highest potential, an IDC similar to the one used by the Corneometer® must be incorporated. If such a transducer were not available the current one can be easily enhanced by replacing the copper strips with gold strips.

Figure 5.1: The Corneometer® probe. The interdigital capacitor (IDC) is shown at the tip as a white/metallic square

The IDC used in this project has the spacing between the copper strips on an order of magnitude just below millimetres. Likewise, this is also the case of the Moistsense transducer. Because the spacing cannot be reduced any further with more advanced equipment to work with, the IDC used in this project has a maximum penetration depth. This depth is likely to reach the more shallow depths of the stratum corneum layer. Although this serves the purpose of proving the concept of skin moisture sensing devices for application toward Eczema, it is not at a practical stage to be considered medical grade. This problem is addressed by combining properties of both the Corneometer® and Moistsense.

The properties of the Corneometer® IDC allow it to be able to make full and accurate use of the entire stratum corneum depth in its analysis of the skin. When comparing the IDC used in this project and the interdigital capacitors used in most commercial devices such as the Moistsense, it is no wonder why the Corneometer® is the best available. The only thing this project and the Moistsense have over the Corneometer® is the fact that the Corneometer® is not portable in the sense that the other two devices are. This project and the Moistsense are both battery powered while the Corneometer® is not, making it inapplicable toward Eczema. Any future work done on this project would be to push the project to be a combination of the Moistsense and the Corneometer®. This could be accomplished by replacing the IDC milled by IEEE with an IDC equivalent to the one used by the Corneometer® to increase sensitivity and the

scale on which skin moisture can be measured. From the high quality IDC the capacitance measuring circuit could be used to measure the capacitance because interdigital capacitors are on the scale of picofarads. The PCB version of the capacitance measuring circuit along with the ADC, microcontroller, and smaller LCD/LED screen would be used. The end result would look much like the Moistsense and have a similar functionality: it will be handheld. With these modifications, the project will be placed between the Corneometer® and the Moistsense in terms of quality but will have an all-new and original application that neither device yet address. The device would achieve the accuracy of the Corneometer® without any extra features the Corneometer® provides while maintaining the portability of the handheld Moistsense device.

5.2 Recommendations

It is worth discussing the development of the device as a medical tool. The application toward Eczema is obviously a medical application. As with all medical devices, there is always a high financial cost associated with biomedical instrumentation. This is because the devices developed for the field of medicine must be made with a great deal of accuracy and a high standard of care. Quality is of the utmost importance in this field and thus no expense must be spared. For this reason, it is not fair to compare the work accomplished in this project to the $5200 USD Corneometer®. If work is to be further done for this project it must be properly funded. A student budget is not sufficient to fully complete this project in the way it is meant to be. With a larger budget it would be easy to build better interdigital capacitors to be used with high quality capacitance measuring circuits capable of high sensitivity on the picofarad range. Without incorporating the extra features of the Corneometer® it would be easy to keep the size of the project to a minimum as well.

In terms of recommendations that can be made toward future peers working on the project or one similar, a few recommendations can be made. This project has demonstrated the success in the proof of the concept; a similar project may take the results from this one as a starting point. Instead of rebuilding

the capacitance measuring circuit on a breadboard a PCB version using integrated circuit components should be made. It is not beyond the capabilities of an undergraduate student to mount a microcontroller onto the same PCB with the necessary connections to an ADC and a much smaller LCD/LED screen than the one used in this project. It is recommended that a professional milling machine be used to produce the IDC if access to one is available; the author knows how difficult it can be to find one. If it is not possible to use a professional milling machine it is recommended that a larger IDC should atleast be used. If the preceding recommendations are followed the last one is to find suitable housing for the device. The final product should lie on a fairly thin and long piece of PCB. The device should be able to fit in the shell of any long rectangular plastic object. The author recommends that the shell of an electronic home pregnancy test be used. Not only is the plastic shell of an electronic home pregnancy test the right size, it also has a small opening for an electronic display. Furthermore, the shell has an opening at the front, if the testing material is removed, from which the leads connected to the IDC can reach the capacitance measuring circuit. Housing is important to the success of this project and is highly recommended. By housing the device it becomes a handheld unit capable of demonstrating the applicability of the proposed solution toward Eczema. Housing also increases the presentation value of the project. See figure 5.2.

Figure 5.2: Clearblue digital home pregnancy test – a suitable housing unit for a prototype of a handheld skin moisture monitoring device for application toward Eczema

5.3 Conclusions

The duration of the project lasted an entire eight months. It cost approximately $175 CDN in total with a final product valued at $60 in components. The project has achieved its goal in designing a portable skin moisture sensor for application toward Eczema. Where the project fails is in making the device a handheld one. The one goal the project did not reach is easily remedied with more time; the device only needs to be transferred to a PCB.

A proof of concept for the device was achieved through the completion of a fully functional skin moisture sensor. A range of values was determined from which it was made possible to analyze skin moisture and to make a diagnosis of its current state. Being able to diagnosis the state of skin moisture is important in the treatment of Eczema.

The uniqueness of this project stems from the fact that this approach toward the treatment of Eczema have never been explored before. Conventional methods of treating Eczema involve applying various pharmaceutically developed, high moisture content creams applied once or twice daily. Home remedies/self-care solutions involve the application lotion to dry skin. The problem with these methods is that Eczema can attack anytime, it only takes a small area of skin to dry or skin contact with an allergen to initiate the manifestation of symptoms. The device developed in this project suggests a new solution to the Eczema problem by offering continual monitoring of the state of the skin. By continually monitoring skin moisture levels, drying can be prevented, effectively treating Eczema.

Although the device may not be perfect, the author believes that this project is the right step in a new direction.

Appendix A: Programming for the AVR Butterfly in C

```
#include <avr/io.h>
#include <avr/interrupt.h>
#include <avr/pgmspace.h>
#include <avr/sleep.h>
#include <inttypes.h>
#include <stdlib.h>        // for itoa() call
#include "main.h"
#include "lcd_functions.h"
#include "lcd_driver.h"
#define pLCDREG_test (*(char *)(0xEC))

int main(void) {

        char buffer[10];
        int num,count;

  ADCSRA |= (1 << ADPS1); // Set ADC prescalar to 4 - 4MHz sample rate @ 16MHz - 0.25 uS
per sample

  ADMUX |= (1 << REFS0); // Set ADC reference to AVCC
  ADMUX |= (1 << ADLAR); // Left adjust ADC result to allow easy 8 bit reading
  ADMUX |= (1 << MUX0);
  ADCSRA |= (1 << ADEN);  // Enable ADC

  LCD_Init();
  while(1)  // Loop Forever
  {
          ADCSRA |= (1 << ADSC);  // Start A2D Conversion

                  num = ADCH;
```

```
                num = num - 86;

                //Output to LCD Driver
//////////////////////////////////////////////////////////////////////////////
        count=0;

        itoa(num,buffer,10); //converts int to string, radix of 10 for decimal

  sei();
        while (count<10)        // Main loop
  {
                LCD_puts(buffer, 1);
                LCD_Colon(0);
                count++;
  }
        LCD_Clear();
        LCD_UpdateRequired(TRUE, 0);
//////////////////////////////////////////////////////////////////////////////
  }
}
```

Appendix B: Components List

Item	**Quantity**
Breadboard	1
74C14 Hex Schmitt Trigger	1
1N4148 diode	3
120 KΩ resistor	1
2.2 KΩ resistor	1
1 nF capacitor	1
1 MΩ resistor	2
1 µF capacitor	1
10 KΩ pot-trimmer	1
3.3 nF capacitor	1
8V2 Zener diode	1
LED	1
on-off switch	1
100 Ω resistor	1
12 V battery	1
1.5 V AA battery	2
Interdigital capacitor	1
Silicone varnish (from silicone pen)	1
AVR Butterfly microcontroller kit	1

References

[1] Bielfeldt, S., et al. (2003, May). *Capacitance Measurement of Skin Moisture: Sophisticated Calibration of Instruments*, poster presented at the 14th ISBS Congress, Hamburg, Germany.

[2] J. Fluhr, *Bioengineering of the Skin : Water and Stratum Corneum.* ,2nd ed.Boca Raton: CRC Press, 2005.

[3] J. Ring, B. Przybilla, T. Ruzicka and SpringerLink, *Handbook of Atopic Eczema.* ,Second Edition ed.Berlin, Heidelberg: Springer-Verlag Berlin Heidelberg, 2006.

[4] W. Courage, G. Khazaka, *Corneometer CM 825*. Retrieved September 2008, from http://www.courage-khazaka.de/products/p_cm_825.htm

[5] Jacknin, J., *Smart Medicine for Your Skin*. New York: Avery, 2001.

[6] Fluhr, J., et al., *Sensitive Skin Syndrome*. New York: Taylor & Francis Group, 2006.

[7] R. Baran, H. Maibach. *Textbook of Cosmetic Dermatology*. 2nd ed. United Kingdom: Taylor & Francis Group, 1998.

[8] R. C. Dorf. *Introduction to Electric Circuits.* ,2nd ed.New York: Wiley, 1993.

[9] T. J. Kelleners, R. W. O. Soppe, D. A. Robinson, M. G. Schaap, J. E. Ayars, and T. H. Skaggs. *Calibration of Capacitance Probe Sensors using Electric Circuit Theory*. CA: Soil Science Society of America, 2004.

[10] Chou, J., et al. *Study on the moisture-sensitive device for the determination of human skin moisture*. Taiwan: Chung Yuan Christian University, National Yunlin University of Science and Technology, National Chi Nan University, 2003.

[11] Komeda, T., et al. *Microsensor for the measurement of water content in the human skin*. Copenhagen, Denmark: Book of Abstracts of Eurosensors XIV, August 2000.

[12] Mitchell, C. *Add-on… Capacitance meter.*. Retrieved November 2008, from http://www.talkingelectronics.com/html/CapMeter.html

[13] W. H. Hayt, J. A. Buck. *Textbook of Cosmetic Dermatology*. 6th ed. U.S.A: McGraw-Hill, 2001.

[14] Registrar. *Undergraduate Course Calendar*. McMaster University, 2008.

[15] Public. *Eczema*. Wikipedia, 2009.
http://en.wikipedia.org/wiki/Eczema

Vita

Scott Truong is an alumnus of the Electrical and Biomedical Engineering program at McMaster University. He is the founder of the club Engineers 4 Engineers of McMaster University and the University of Waterloo. He is currently pursuing a career in medicine.