AN EXPERIMENTAL INVESTIGATION OF UNEQUAL WIDTH HSS MOMENT CONNECTIONS FOR VIERENDEEL TRUSSES

AN EXPERIMENTAL INVESTIGATION OF UNEQUAL WIDTH HSS MOMENT CONNECTIONS FOR VIERENDEEL TRUSSES

BY

FRANCIS JAMES BRADY B.E.

A Project Report

Submitted to the School of Graduate Studies

in Partial Fulfillment of the Requirements

for the Degree

Master of Engineering

McMaster University

1974

MASTER OF ENGINEERING (1974) McMASTER UNIVERSITY
(Civil Engineering) HAMILTON, Ontario.

TITLE: An Experimental Investigation of Unequal Width HSS Moment Connections for Vierendeel Trusses

AUTHOR: Francis James Brady. B.E.
(National University of Ireland)

SUPERVISOR: Dr. R. M. Korol

NUMBER OF PAGES: VII, 89

SCOPE AND CONTENTS:

A research programme is presented in which 14 HSS Vierendeel joints were tested. The specimens tested were all unequal width connections and two distinct b/h values were used (0.60 and 0.83). Four specimens were unreinforced while the remaining ten had three distinct reinforcement types. These were branch member flange stiffening plates, chord member top flange stiffeners and branch member offcut haunches.

Each specimen was loaded to failure and load-deflection and moment-rotation curves were plotted. In addition, the joint modulus (J) for each joint type was calculated.

ACKNOWLEDGEMENTS

I wish to extend my sincere appreciation to my research supervisor, Dr. R. M. Korol, for his guidance and encouragement during the course of this research programme.

Financial assistance given by the Civil Engineering Department, in the form of Teaching and Research Assistantships, was greatly appreciated.

This research programme was sponsored by CIDECT (Comite International pour l'etude de la Construction Tubulaire), through the direct motivation of the Steel Company of Canada to whom I extend my sincere thanks. I also wish to thank the British Steel Corporation for providing the material used in four of the specimens.

Finally, I would like to thank the technicians in the Applied Dynamics Laboratory for their assistance and encouragement.

TABLE OF CONTENTS

ILLUSTRATIONS

PHOTOGRAPHS PAGE

CHAPTER I

INTRODUCTION

1.1 HOLLOW STRUCTURAL SECTIONS:

Structural Hollow Sections have gained wide popularity in recent years because they offer a wide range of advantages.

(i) Concentration of material in the periphery makes the HSS profile stronger and more stable with regard to both principal directions of bending. At the same time, these sections possess a relatively larger capacity to resist torsion and local instability.

(ii) Maintenance of HSS members is easier and cheaper than that of the more traditional sections. Painting these sections is easier than the traditional types and the interior surfaces can be protected from corrosion by sealing off the ends.

(iii) The smooth clean appearance of hollow sections

is aesthetically pleasing and this becomes increasingly obvious when HSS trusses are constructed with well designed joints.

(iv) The flat and smooth surfaces of square and rectangular hollow sections assist in the easy attachment of branch members.

In order to utilize these sections more efficiently, the behavior of welded connections made from HSS members must be known. In the past decade, researchers have been studying the problems involved, but not much work has been done using large sections or unequal width connections.

In 1965, Jubb and Redwood [1] indicated that full moment transfer can be achieved at an equal width connection, without the need for a special connection assembly. However, they deduced that where the connection is made between members of unequal width, there is a considerable reduction in the stiffness of the joint. This is due to local flexure of the larger member where the smaller branch member is attached to it. As a direct result of this finding, they state that the Vierendeel frame, which is generally based on rigid joints, will not

be a sound proposition when the members of the frame have different widths and no extra stiffeners are added to the joint.

Other research [2,3] has confirmed that unequal width connections without reinforcement lack the stiffness required to render them structurally efficient. Thus, it is necessary to seek reinforcement methods for these connections which are efficient, economical and aesthetically pleasing.

1.2 CLASSIFICATION OF CONNECTIONS:

HSS connections can be classified in two categories; equal width connections ($\lambda=b/h=1$) and unequal width connections ($\lambda=b/h<1$). This is shown in Fig. 1.1.

With equal width connections, most of the load applied to the branch member is directly transmitted from the branch member's webs to the webs of the chord member, as they are connected together in the same plane by the weld metal. The flanges of the chord member have a low stiffness compared to it's webs. Consequently, most of the load is transmitted through the corners and the loads induced by the branch member's flanges are not critical.

With unequal width connections ($\lambda<1$), the behaviour of the joint becomes a plate problem and the loading is resisted by flexure of the chord member's top flange. Thus, the strength and stiffness of this connection type will be greatly reduced. This point was demonstrated by Duff [4] who showed that a rapid increase in joint flexibility occurred as the λ value decreased.

A number of stiffening devices have been proposed for unequal width connections, in order to increase the efficiency of the joint. In this exercise, three basic types were chosen as they seemed to offer a high probability of increased stiffness without being either too costly or too aesthetically unpleasing. The three types chosen are listed below.

<u>TYPE 1.</u> <u>Branch member flange reinforcing plates.</u> <u>(Fig. 1.2)</u>

These plates are welded to both flanges of the branch member and they vary in width, from the branch width at the top to the chord width at the base. It is hoped that these plates will enable a large portion of the branch member forces to be transferred directly to the webs of the chord member. This would reduce the possibility of plate flexure

in the chord members top flange.

TYPE 2. Chord member top flange reinforcing plate. (Fig. 1.2)

This is a square plate which is welded to the top flange of the chord member. The side of the square is the width of the chord member less four times it's wall thickness. This allows for the fact that the corner radius on both sides is twice the wall thickness and thus, the reduction in size facilitates the welding process.

The purpose of this strengthening plate is to increase the strength of the chord member's top flange and prevent plate flexure in this area.

TYPE 3. Haunched connection. (Fig. 1.2)

The haunches used are offcuts of similar cross section to the branch member. Tests using haunched connections have been performed at Corby (4) with some success. However, in one series of tests 1 1/2" x 1 1/2" offcuts were used on a 4" x 4" member, and in another 3" x 3" offcuts were used on a 6" x 3" branch member. We propose using offcuts of similar size to the branch member. i.e. a 5" x 5" offcut with a 5" x 5" member.

For joints with a λ value close to 1.0, these haunches should have the dual effect of reducing the effective moment in the branch member, through a reduction in the effective lever arm, and by preventing the possibility of plate flexure in the chord member.

When λ decreases, the second advantage is not quite as valid, as it becomes more difficult to transfer the forces to the webs of the chord member. However, there is still some advantage, in that the branch member load is being spread over a larger area and therefore plate flexure should not occur quite as rapidly.

1.3 OBJECTIVE OF STUDY:

Vierendeel trusses composed of rectangular HSS have been used to a limited extent in Canada for pedestrian overpasses and various building trusses. However, there is some reluctance on the part of Engineers to use them, due to the lack of design information. The object of this exercise is to provide experimental information from which design criteria can be deduced.

As stated above, it is proposed to concentrate on unequal width connections. The primary objective is to determine the most structurally efficient type of joint strengthening, which is consistent with economy, for two different λ values.

The basis for adequacy of a joint will be primarily strength, i.e. development of the fully plastic moment in the branch member. Recognition of deflection limitations will also be made. The importance of this criterion has been established by Loo.[3] In addition, costs of each type of strengthening device will be taken into account and recognition will be given to the fact that the aesthetic appearance of a joint is an important factor in exposed construction.

1.4 OUTLINE OF PROPOSED TESTS:

A typical test piece will consist of a chord member which will be fixed to the floor while the branch member will be loaded laterally by a hydraulic jack fixed to a floor based column arrangement. Joint flexibilities will be determined through the use of dial gauges, which will measure the relative rotations of in-plane flats of

the branch and chord members.

The work of Cute, Camo and Rumpf [5] shows that the joint moment capacity is relatively insensitive to axial force in the chord member. Consequently, the simple test set-up, without applied axial loading, is deemed to be adequate to relate to actual conditions.

Loading will be incremental up to the estimated working load of the joint in question. For the haunched connections the estimated working load will be the full working load of the branch member. For unreinforced connections, the method suggested by Lazar and Fang will be used to determine the estimated working load. This method involves multiplying the branch member working load by a factor of λ^2. As $\lambda < 1$, this effectively reduces the theoretical capacity of the joint to a more reasonable level.

When this point is reached in the loading sequence the load will be released and the permanent set measured. Then the incremental loading will be resumed up to the estimated working load and then beyond this point, until the specimen is capable of taking no further loading.

Finally, when the test is completed, coupons will

be cut from both the chord and branch members and they will be subjected to tensile tests to determine the yield strengths.

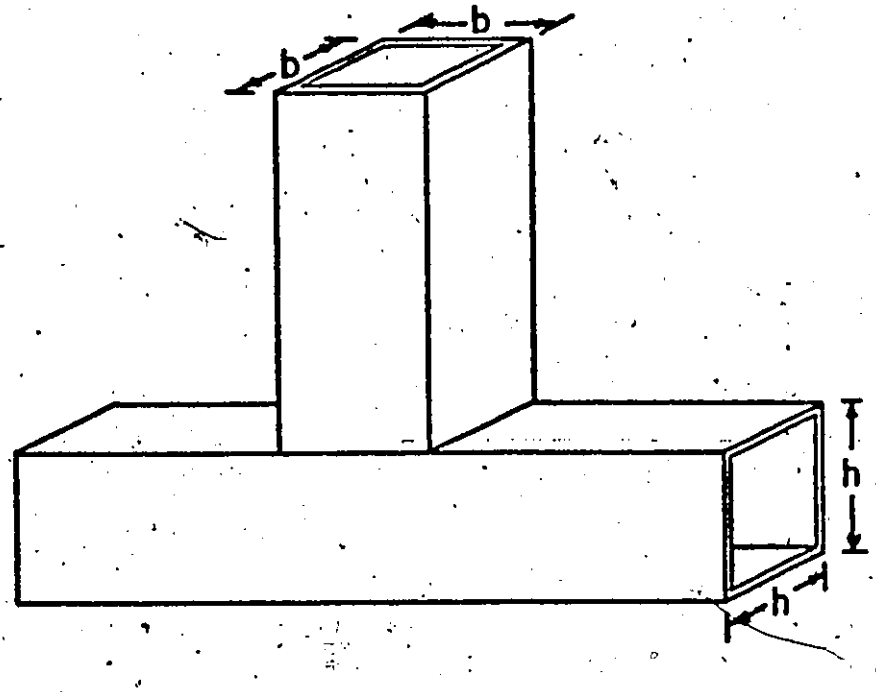

EQUAL WIDTH HSS CONNECTION b=h.

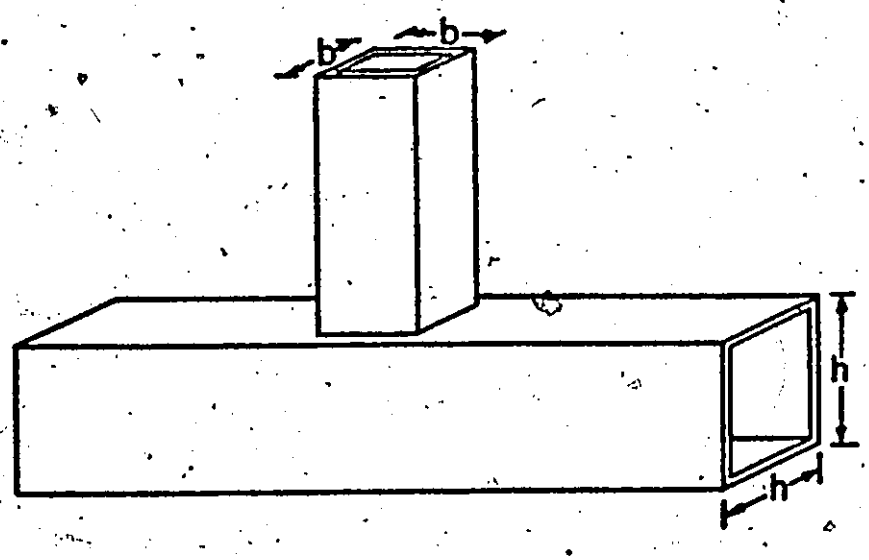

UNEQUAL WIDTH HSS CONNECTION b<h.

Fig. 1.1 Classification of HSS Connections.

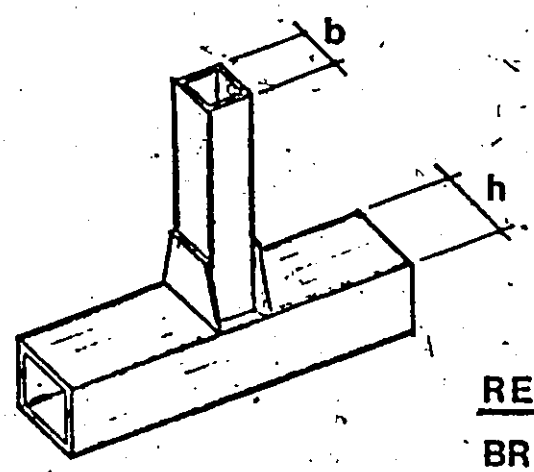

REINFORCEMENT TYPE 1

BRANCH MEMBER FLANGE REINFORCING PLATES

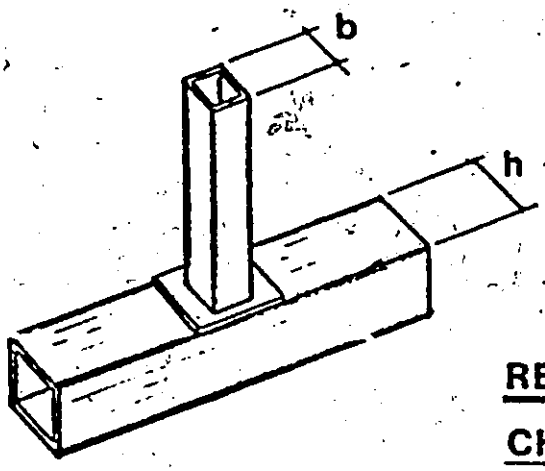

REINFORCEMENT TYPE 2

CHORD MEMBER TOP FLANGE REINFORCING PLATE

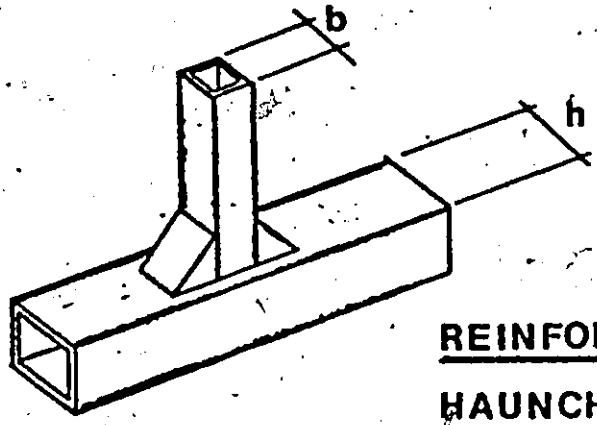

REINFORCEMENT TYPE 3

HAUNCHED CONNECTION

FIG 1.2
REINFORCEMENT TYPES

CHAPTER 2

DETAILS OF SPECIMENS AND APPARATUS USED

2.1 SPECIMEN DETAILS:

Fourteen specimens were specially fabricated for the testing programme. It was decided in the planning stages that these specimens should be fabricated under typical fabrication shop conditions. Consequently an average mid-size fabricator was chosen for the work. Each specimen consisted of a 48" long branch member connected to an 84" long chord member. The specimens comprised three distinct groups.

Group A contained 4 specimens Numbered 1 to 4. Each of these specimens consisted of a 6" x 6" chord member and a 5" x 5" branch member. The steel used in these specimens was grade G40.21.50W cold formed.

Group B contained the 4 specimens numbered 11 to 14 and the dimensions of these specimens were similar to those of Group A. However, the steel used was hot finished and was provided by the British Steel Corporation.

Group C comprised the six specimens numbered 5 to 10. Each of these specimens consisted of a 6" x 6" branch member connected to a 10" x 10" chord member. The steel used in these specimens was also grade G40.21.50W cold formed.

In each group some unreinforced specimens were tested along with reinforced specimens of each type. Type 2 reinforcement was used only in Group C, as welding difficulties would arise in Groups A and B due to the high λ value ($\lambda = 0.833$).

Details of the complete range of specimens are shown in Table 2.1.

Upon completion of the tests coupons were cut from each branch and chord member. These coupons were then subjected to standard tensile tests on a Tinius Olsen machine in accordance with the relevant ASTM Specification.(8) The fabrication cost for each specimen is shown in Table 2.4. All were fabricated in mid 1973 and thus the costs are based on the rates prevailing at that time.

2.2 DETAILS OF THE APPARATUS USED:

A schematic elevation of the apparatus is shown in Fig. 2.2 and a photograph is shown in Fig. 2.3.

Both ends of the chord member were supported on wide flange beams which were bolted to the floor of the building. Angle cleats were welded to these support beams to prevent sideways movement of the specimen in the rig. The rear of the chord member was held down by a spreader beam and two 2 1/2" diameter bolts. All bolts were attached to the 2 ft. deep concrete floors through in situ sleeves.

Load was applied by a loading jack with a 10 inch stroke used in conjunction with a 50 kip capacity load cell. This was connected through an 18" x 4" channel to a pair of floor mounted wide flange columns. This loading arrangement had a fairly wide range of height adjustment. It was adjusted for each specimen, to ensure that the load was applied a uniform 44" from the top flange of the chord member. In addition, there was a provision for horizontal adjustment, to ensure that the load was applied centrally to the branch member in all cases.

The load was applied to the webs of the branch member through a pair of plates, which were welded to each web. A 1 1/2" diameter bar was inserted in the recesses provided in these plates and another recessed plate was placed in the gap between the bar and the load cell. The

purpose of this arrangement was to maintain the applied load at the same horizontal level, even though the branch member was displaced due to the applied load.

2.3 TESTING PROCEDURE:

When each specimen was set in the rig, a series of dial gauges was positioned to record the displacements at certain key points. The dial gauge arrangement was fairly standard for all specimens. Five gauges were placed underneath the chord member of each specimen to measure the displacement contour of the bottom flange. In all cases, these gauges were a uniform 6" apart. The centre one in all cases was placed directly on the projected centre line of the branch member.

Five more gauges were used to measure the displacements of the branch member. In all cases, one gauge was placed directly in line with the load cell and thus, it was a uniform 44 inches from the top flange of the chord member. In addition, another gauge was placed as close as possible to the bottom of the branch member and three further gauges were placed at 4" height intervals directly above this bottom gauge.

The reason that the bottom gauge couldn't be placed in a uniform position for each test, is that the geometry of the connection precluded it in certain cases. For instance, when haunches were used, it was impossible to place any gauge close to the chord member. When branch member flange plates were used, it was found that the top of the plate conflicted with the placing of the second gauge from the base.

Thus, uniform positioning was not possible for the branch member's dial gauges though the same distance increment between gauges was maintained.

The front of the specimen was prevented from moving out of the rig by a reinforced plate which was welded to the support beam. When the specimen was loaded, some elastic displacements would occur in this plate and beam, which would introduce in accuracies in the readings of certain of the other gauges. Consequently, it was decided to use an eleventh gauge to measure the displacement of this plate. The readings from this gauge could then be used to adjust the readings in the other gauges.

In test series B and C, strain gauges were also used. These were introduced in order to provide extra information

on both the rotations and the strain distribution at the base of the branch member. The reasoning behind their use and details of their arrangement are covered in subsequent chapters.

Before each specimen was loaded a probable working load for the joint was calculated. The method used is described in Section 1.4. The specimen was then loaded in increments of 10% of the branch member's working load capacity. When the probable joint working load was reached, the load was released and the permanent set measured.

Upon completion of this phase incremental loading was resumed until the specimen could accept no further load. At each increment, all eleven dial gauges were read and the readings recorded. In addition the permanent set at failure was also recorded.

SPECIMEN NO.	BRANCH MEMBER SIZE	CHORD MEMBER SIZE	$\lambda = b/h$	b/t_c	0.2% OFFSET YIELD STRENGTH BRANCH	0.2% OFFSET YIELD STRENGTH CHORD	STRENGTHENING DEVICE	WELD TYPE
1.	5"x5"x1/4"	6"x6"x3/16"	0.833	26.66	61.2 k.s.i.	57.5 k.s.i.	NONE	FILLET
2.	5"x5"x1/4"	6"x6"x3/16"	0.833	26.66	59.6 k.s.i.	56.6 k.s.i.	NONE	PREPARED
3.	5"x5"x1/4"	6"x6"x3/16"	0.833	26.66	60.1 k.s.i.	56.4 k.s.i.	TYPE 1	FILLET
4.	5"x5"x1/4"	6"x6"x5/16"	0.833	16.00	62.2 k.s.i.	48.2 k.s.i.	TYPE 3	FILLET
5.	6"x6"x3/16"	10"x10"x3/8"	0.600	16.00	55.4 k.s.i.	58.8 k.s.i.	NONE	FILLET
6.	6"x6"x3/16"	10"x10"x3/8"	0.600	16.00	56.0 k.s.i.	59.6 k.s.i.	NONE	PREPARED
7.	6"x6"x3/16"	10"x10"x3/8"	0.600	16.00	55.2 k.s.i.	59.3 k.s.i.	TYPE 2	FILLET
8.	6"x6"x3/16"	10"x10"x3/8"	0.600	16.00	59.0 k.s.i.	59.4 k.s.i.	TYPE 2	PREPARED
9.	6"x6"x3/16"	10"x10"x3/8"	0.600	16.00	54.3 k.s.i.	59.3 k.s.i.	TYPE 1	FILLET
10.	6"x6"x3/16"	10"x10"x3/8"	0.600	16.00	57.3 k.s.i.	58.1 k.s.i.	TYPE 3	FILLET
11.	5"x5"x1/4"	6"x6"x1/4"	0.833	20.00	60.9 k.s.i.	53.6 k.s.i.	NONE	FILLET
12.	5"x5"x1/4"	6"x6"x1/4"	0.833	20.00	62.9 k.s.i.	52.7 k.s.i.	NONE	PREPARED
13.	5"x5"x1/4"	6"x6"x1/4"	0.833	20.00	52.8 k.s.i.	53.9 k.s.i.	TYPE 1	FILLET
14.	5"x5"x1/4"	6"x6"x1/4"	0.833	20.00	61.9 k.s.i.	60.6 k.s.i.	TYPE 3	FILLET

TABLE 2.1 Specimen Details

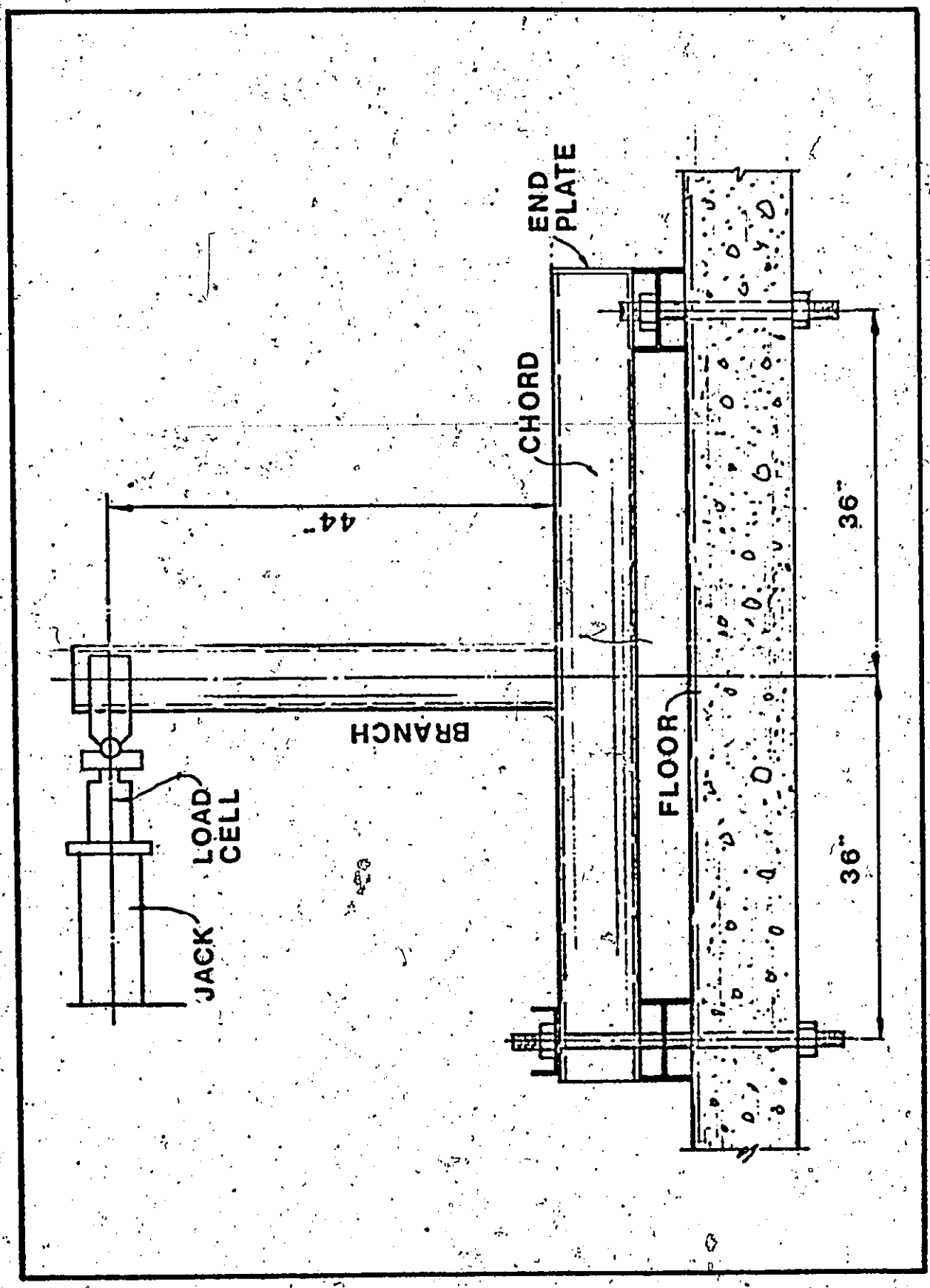

FIG 2.2
SCHEMATIC ELEVATION OF TESTING ARRANGEMENT

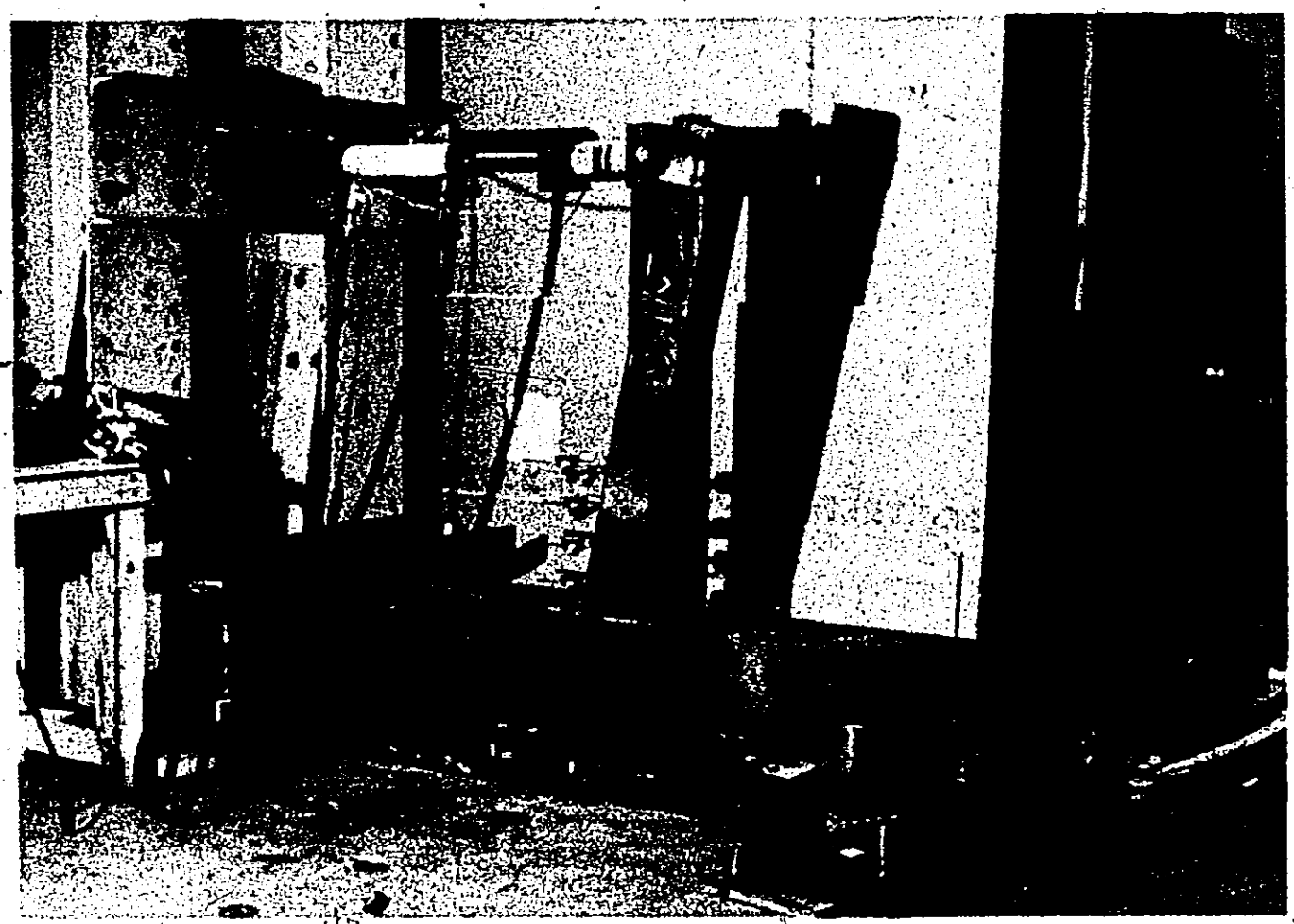

Fig. 2.3

Typical Specimen Undergoing Testing

SPECIMEN NO.	FABRICATION COSTS (MID 1973)
1	$ 44.00
2	$ 48.00
3	$ 55.00
4	$ 65.00
5	$ 52.00
6	$ 54.00
7	$ 61.00
8	$ 65.00
9	$ 72.00
10	$ 78.00
11	$ 31.00
12	$ 38.00
13	$ 55.00
14	$ 61.00

TABLE 2.4
FABRICATION COST DETAILS

CHAPTER 3

RESULTS OF TEST SERIES A

3.1 GENERAL DISCUSSION:

This was the first series tested and, to a large extent, subsequent tests were based on observations noted during this series. Upon completion of this series, it was found that some alterations in the test procedure were required. At this point in the programme it was felt that the dial gauges could form the basis upon which the relative rotation of branch and chord members could be assessed. However, insufficient sensitivity deemed such an approach inadequate. Remedial measures were taken in subsequent series and are reported herein. Thus, although these specimens were not studied in such great depth as subsequent ones, they served a useful purpose in pointing out areas to be explored, during the remainder of the programme.

This series consisted of four specimens, numbered 1 to 4. These specimens all had a 6" x 6" chord member and a 5" x 5" branch member, giving them a λ value of 0.833.

The branch members all had 1/4" wall thicknesses but there was some variation in the chord members. Specimens 1, 2 and 3 had 3/16" thick chord members, whereas Specimen 4 had a 5/16" thick chord member. Specimens 1 and 2 were unreinforced at the connection. Specimen 3 had branch member flange reinforcing plates, while Specimen 4 was reinforced with haunches. All specimens were fillet welded with the exception of Specimen 2 which had partial penetration groove welds.

As the same branch member was common to each Specimen, its theoretical working capacity in bending was constant. As the 5" x 5" x 1/4" section is a compact section, the working capacity of this section is: (NBC Code 1970).[7]

$$0.66\,\sigma_y \times Z = 0.66 \times 50 \times 6.77 = 223 \text{ kips ins.}$$

where σ_y and Z are yield stress and plastic section modulus respectively.

Using the empirical method, suggested by Lazar and Fang,[2] the working capacity of the unreinforced joint would then be

$$223 \times (0.833)^2 = 155 \text{ kips ins.}$$

This figure was used as a proposed working moment for Spe-

cimens 1, 2 and 3 and the full branch capacity was deemed to be a suitable estimate of the working moment for Specimen No. 4.

Load deflection curves for the four specimens are shown in Fig. 3.1. These curves are plots of the applied load plotted against the deflection of the branch member at the point of application of the load, which was 44 inches above the top flange of the chord member. The deflection readings have been corrected, both for the displacement of the end plate (gauge 11) and to allow for the rotation of the chord member. A photograph of the four specimens, after the series was completed, is shown in Fig. 3.2. A tabular presentation of the results obtained is shown in Table 3.3.

3.1.a. SPECIMEN NO. 1:

This specimen was loaded incrementally to the full branch member working moment. In retrospect, this was an error of judgement and the specimen should only have been loaded to the 3.52 kips level. At about this level yielding occurred and the load was quite difficult to maintain at the 5.06 kips level. When the load was released, a

large amount of permanent set was measured (43% recovery), indicating that the working moment had been reached at a much lower level. Fom the moment displacement curve, it can be seen that the specimen was just beginning to move out of the elastic range at the empirically calculated level of 3.52 kips and by graphical interpretation it can be deduced that the recovery at this level would have been about 75%.

When the loading was resumed, yielding occurred more rapidly and failure occurred at a level of 5.78 kips. As the fully plastic moment capacity of the branch member alone is 408 kips ins. (9.27 kips applied load) it would seem that this jointing method is not very efficient.

3.1.b. SPECIMEN NO. 2:

The only difference, between this specimen and specimen No. 1, was that a partial penetration groove weld was used in place of a fillet weld. Hence, one would expect only minor variations in the results between the first two specimens. This is borne out by the results obtained.

Once again, this specimen was loaded incrementally

to the branch member working moment. Before this level was reached considerable yielding was taking place and when the load was released, a large amount of permanent set was observed (43% recovery). Reloading then took place and when the specimen reached the 5.06 kips level once more, failure took place and large deflections were observed.

It is interesting to note that Specimen 2 was stiffer initially than Specimen 1, but yielding took place much more rapidly and failure occurred at a lower level. This can be readily seen by observation of the load-deflection curves (Fig. 3.1) and noting that the curves cross over after yielding had begun to take place.

3.1.c. SPECIMEN NO. 3:

This specimen had branch member flange reinforcing plates. It was thought that these plates would transfer some of the load directly to the chord member's webs. This would have the effect of strengthening the specimen, by postponing the advent of plate flexure in the chord member's top flange. However, it was not anticipated that the overall strengthening effect would be sufficient to

allow the joint to reach the full capacity of the branch member. Therefore, it was decided that the likely working moment would be of the same order as for the unreinforced specimens.

The specimen was loaded incrementally up to 3.52 kips and elastic behavior was observed up to the 3.07 kips level. Some yielding then became apparent, though the amount was not of great significance. At the 3.52 kips level the load was released and a 91.6% recovery was measured. When the specimen was reloaded yielding occurred quite rapidly and failure occurred at 6.23 kips.

It can be seen from the load deflection curves (Fig. 3.1), that this specimen showed greater initial stiffness and greater strength throughout the range than the unreinforced specimens. It exhibited about 40% greater initial stiffness but failure occurred at a level only 10% higher than them. Thus, this would not seem to be a major breakthrough, as the slightly increased performance would be difficult to reconcile with the increased cost for this type of connection.

3.1.d. SPECIMEN NO. 4:

This was the specimen with the haunched reinforce-

ment and intuitively this was thought to be the strongest specimen in the series. Thus, it was decided to load it to the full branch member working load (5.12 kips), before measuring the permanent set.

The specimen was loaded incrementally up to this level and no departure from elastic behavior was noted. The load was then released and a 97.5% recovery was recorded. This is significantly better than any of the previous specimens.

The load was then reapplied and only a minimal amount of yielding was observed until a level of 11.35 kips was reached. At this point, yielding became more significant and it increased rapidly, until failure occurred at 15.55 kips. This failure load is remarkable, when compared to the previous specimens, as it is 150% higher than the best of them.

In addition, failure occurred through general yielding of the branch member. As the haunches effectively allowed no rotation in the base part of the member, the actual moment causing failure in the branch member was considerably less than the 684 kips inches (15.55 kips x 44") at the top of the chord member. The maximum moment in the

"free part" of the branch member was

$$684 \times \frac{38.5}{44.0} = 598 \text{ kips ins.}$$

Assuming full plasticity in the branch member, this would mean that the average stress accross the whole cross section would be

$$598.0/8.15 = 73.40 \text{ k.s.i.}$$

As the steel yield is only 50 k.s.i. nominal this figure seems very high. However, steel which has a nominal 50 k.s.i. yield is known to reach these levels locally and the nominal yield stress usually refers to general yielding, in which many fibres are unable to reach that level while others are well in excess of it.

The only conclusion which the author can draw from the above figures is, that the haunches force the flanges of the branch member to accept load along with the webs, whereas the other types of reinforcement do not utilise the full cross section of the member effectively.

It should be noted that the tensile specimen, taken from this specimen's chord member, yielded at less than the rated capacity of 50 k.s.i. However as failure occurred in the branch member, the significance of this fact is not very great. Moreover, the branch members yield

strength of 62 k.s.i. is above the average value recorded suggesting that some fibres may have reached stress levels beyond 73.4 k.s.i. with others near the 62 k.s.i. level.

3.2. MODIFICATIONS TO THE TESTING PROCEDURE:

At this stage in the programme, it was realized that it was necessary to determine the strain distribution at the base of the branch member. In this first series, it had been hoped that the use of stress coat material would determine where and when yielding occurred. A variety of materials were used, including Tenslac and wood resin in solvent. The solvents used were Xylene, Varsol and Methyl Hydrate. The results in all cases were unsatisfactory and no useful information could be got from them.

At this stage in the programme, it was thought that the rotation of the branch member at it's base could be accurately determined from the dial gauge readings. The method proposed to do this was to derive polynomials, which described the displacement profile of the 4 dial gauges at the bottom of the branch member. The polynomials were derived quite easily but, as they had to be differen-

tiated to get slope values, inaccuracy was introduced into the method and the solutions obtained were unsatisfactory.

For the above reasons, namely to obtain an accurate determination of the rotations and to get an idea of the strain distribution, it was decided to use strain gauges for all subsequent tests.

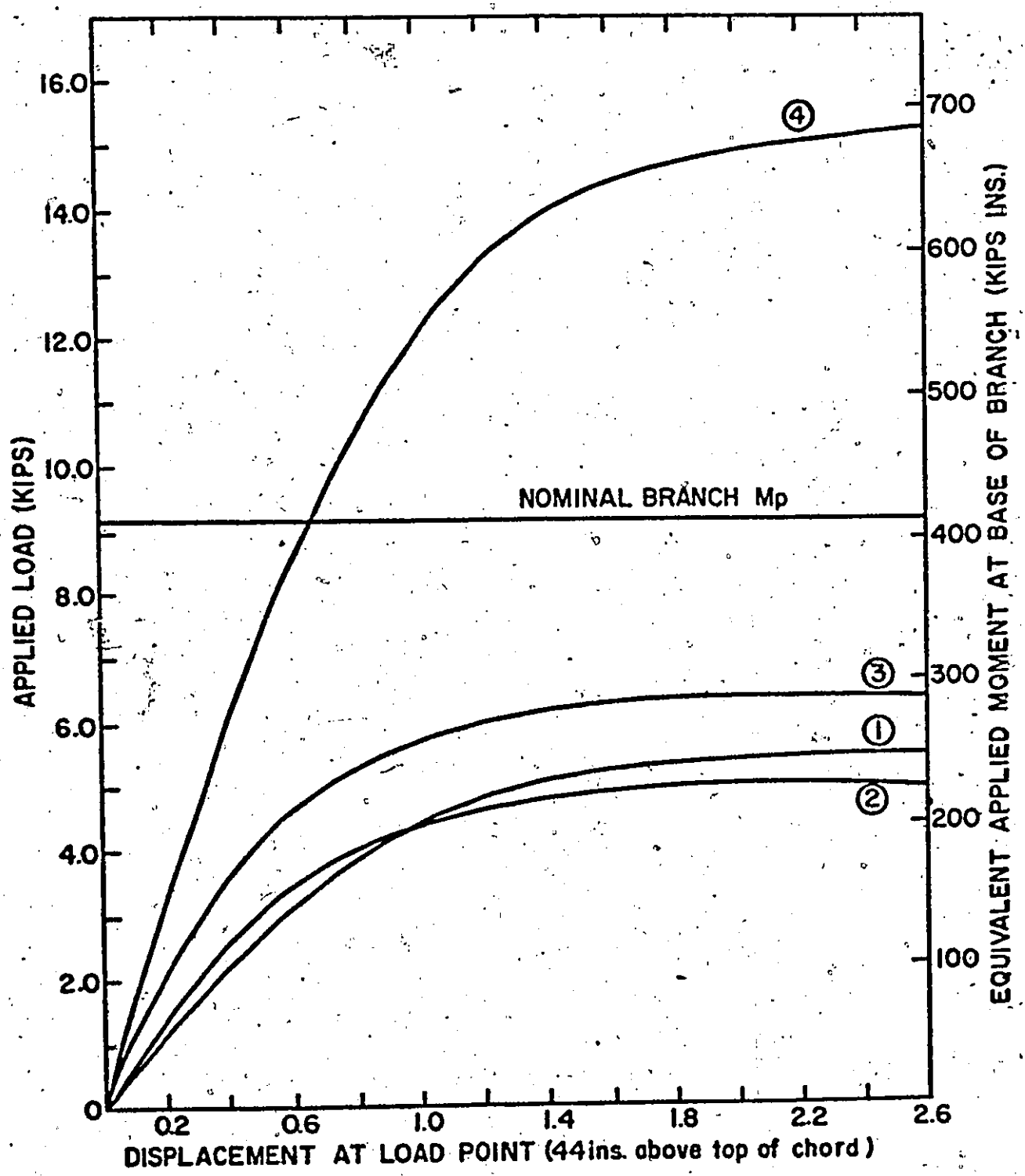

Fig. 3.1
Load-deflection Curves (Series A)

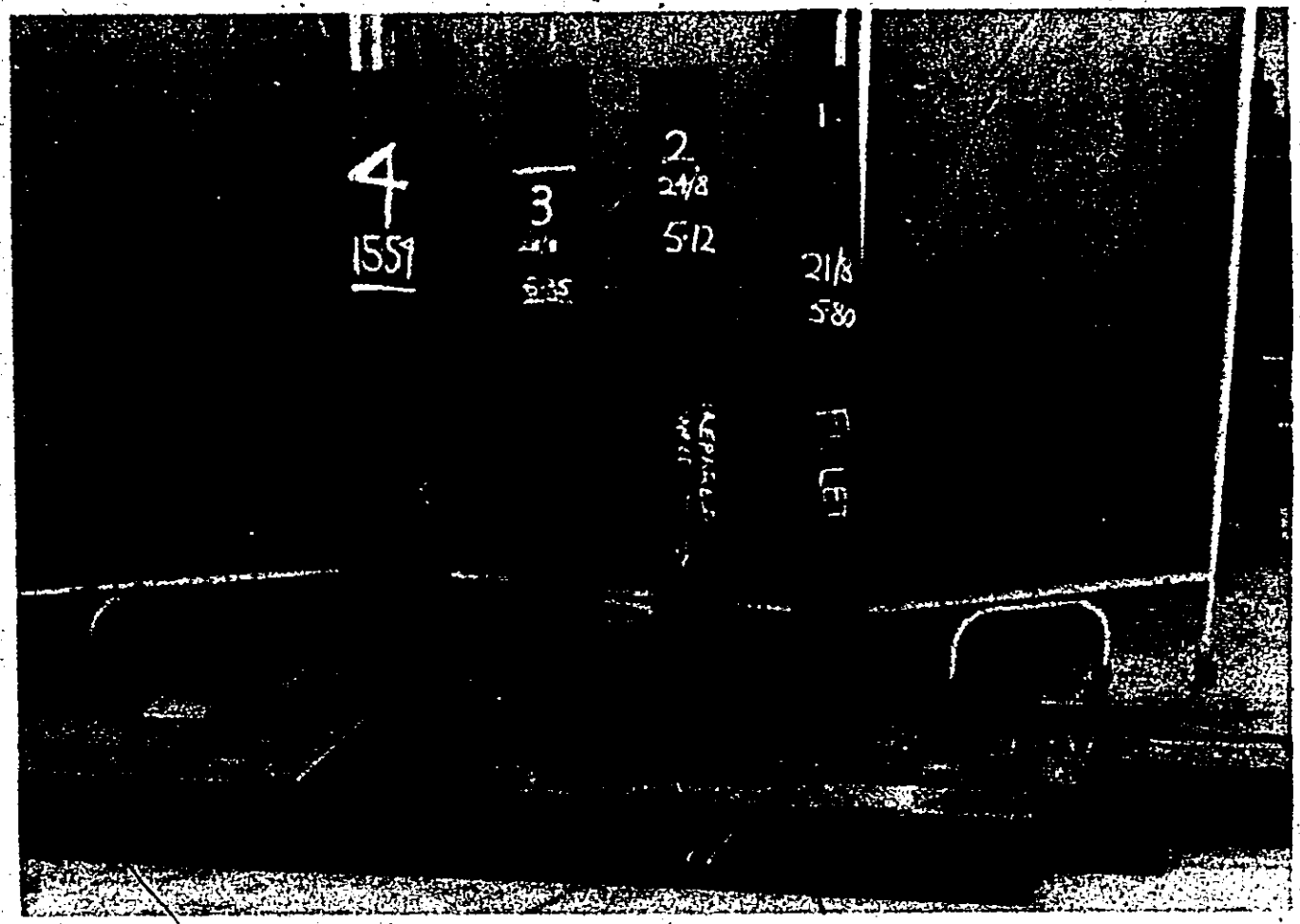

Fig. 3.2

Specimens 1 - 4 After Completion Of Testing

SERIES A. (SPECIMENS 1 - 4)

SPECIMEN NUMBER	BRANCH MEMBER	CHORD MEMBER	λ	b/t_o	PROBABLE JOINT WORKING MOMENT	% RECOVERY AT THIS LEVEL	FAILURE MOMENT	FAILURE MOMENT AS A PERCENTAGE OF BRANCH F.P.M.	FAILURE MODE
1.	5x5x.2500	6x6x.1880	0.833	26.6	155 k.ins.	-	254 k.ins.	62 %	Chord Flange Buckling
2.	5x5x.2500	6x6x.1800	0.833	26.6	155 k.ins.	-	223 k.ins.	55 %	Chord Flange Buckling
3.	5x5x.2500	6x6x.1880	0.833	26.6	155 k.ins.	91.6 %	279 k.ins.	69 %	Chord Flange Buckling
4.	5x5x.2500	6x6x.3120	0.833	16.0	223 k.ins.	97.5 %	684 k.ins.	168 %	Branch General Yield

TABLE 3.3

CHAPTER 4

RESULTS OF TEST SERIES B

4.1 GENERAL DISCUSSION:

Though this was the final series tested, the specimens used are comparable in many ways to those of Series A and it is logical to discuss the results at this stage.

This series consisted of four specimens, numbered 11 to 14. They all had 6" x 6" x 1/4" chord members and 5" x 5" x 1/4" branch members. The λ_o value was a constant 0.833 throughout the series, as was the b/t_c value of 20.0. Specimens 11 and 12 were unreinforced. Specimen 13 had branch member flange reinforcing plates and Specimen 14 had haunches as reinforcement. All specimens were fillet welded, except number 12 which had partial penetration groove welds. The HSS use for all specimens were hot finished.

As the same branch member was common to all the specimens, it's theoretical working capacity in bending

was a constant. This was taken to be exactly equal to the branch members capacity in Series A and hence, equal to 223 kips ins. The probable working moment for the unreinforced connection was 153 kips ins., as before.

This latter figure was used as a proposed working moment for Specimens 11, 12 and 13 and permanent set was measured at this level. As in the previous series, it was assumed that Specimen 14 would have a higher working moment and the permanent set for this specimen was measured at the full branch member working load.

Load-deflection curves for the four specimens are shown in Fig. 4.1. The curves are plots of the applied load plotted against the deflection of the branch member, at the point of application of the load, which was 44 inches above the top flange of the chord member. The deflection readings have been corrected, both for the displacement of the end plate (gauge 11) and to allow for the rotation of the chord member. A photograph of the 4 specimens, after the series was completed is shown in Fig. 4.2. A tabular presentation of the results can be seen in Table 4.3.

In this series of tests, six strain gauges were attached to each specimen. These gauges were placed in

three rows of two gauges on the tension side of the branch member. Each row was placed at the same level as the bottom three dial gauges. One gauge in each row was positioned on the centre line of the branch, while the other one was offset at a distance of 1 1/2" from the centre line. This arrangement can be seen in Fig. 4.4.

4.1.a. SPECIMEN 11:

This unreinforced specimen was loaded incrementally up to a level of 3.52 kips and no major departure from elastic behavior was obvious. The load was then released and the permanent set was measured. It was found to have a 92.8% recovery factor. Loading was then resumed and some yielding was obvious at about the 4.00 kips level. The yielding then became more rapid and failure finally took place at 9.14 kips.

As expected, failure occurred in the top flange of the chord member and no yield strains were observed in the branch member at any stage. By observation of the strain gauge readings, it was clear that the webs of the branch member took most of the loading throughout the range. In addition, these readings confirmed that strain in the

branch member's tension flange was concentrated towards the corners with only minimal strains at the centre of the flange.

Due to the jointing method used, this specimen is comparable to Specimen 1. However, it should be noted that in Specimen 1 the chord member thickness was 3/16", while in this case it was 1/4". One would expect a considerable increase in overall strength at the joint and this is what was observed. Initial stiffness was 100% greater and the failure load was 58% higher. This effectively illustrates the advantage of decreasing the b/t_c ratio to attain an increased joint capacity.

It is worth noting that, though some yielding occurred early in the loading process, the failure load is 99% of the capacity of the branch member alone.

4.1.b. SPECIMEN 12:

The results for this specimen were very close to those of the previous specimen. This specimen was slightly stiffer initially and had a higher failure load. However, as can be seen in Figure 4.1, the curves are almost identical with little to choose between them.

The load was applied in 7 increments, up to a level of 3.52 kips. At this level, the load was released and the permanent set was measured. A 94.2% recovery factor was noted and this is a slight improvement over the previous specimen. When loading was resumed, some non-elastic behaviour was noticed at a level of 4.00 kips. This phenomenon increased with the loading applied and failure occurred at 9.53 kips. This is equivalent to 103% of the capacity of the branch member alone.

Once again it was apparent, from the strain gauge readings, that the branch member's webs took most of the stress, while the flanges took very little. The vast majority of that taken by the tension flange was concentrated at the corners, as negligible strains were recorded at it's centre.

In comparison with Specimen 2, which had a smaller chord thickness, Specimen 12 had 55% greater initial stiffness and an 86% higher failure load.

4.1.c. SPECIMEN 13:

This specimen had branch member flange reinforcing

plates. Because of the results obtained for Specimen 3, the results for this specimen were not expected to greatly exceed the unreinforced specimens. This was indeed the case, as the results were only slightly better than for Specimen 12.

This specimen was loaded up to 3.52 kips and the load was then released. The recovery factor was 94%, which is almost the same as Specimen 12. However, the initial stiffness of Specimen 13 was about 22% higher than that of Specimen 12. Noticable yielding began to take place just above this level and failure occurred at 9.46 kips. This is equivalent to 102% of the nominal capacity of the branch member alone.

The strain gauges indicated that the branch member webs took most of the load and the flange plates took very little. The outer areas of the plates took a significantly greater portion of the load than the inner areas.

The overall performance of this specimen is not significantly better than the unreinforced Specimen 12, though it's greater initial stiffness is important, when deflections are critical. However, it is unlikely that

this would compensate for the added cost involved.

4.1.d. SPECIMEN 14:

This specimen had haunched reinforcement and therefore it was likely to be the strongest of the group. Hence, it was decided to load this specimen to the full branch member working load before measuring the permanent set.

No deviation from elastic behaviour was noted before the load was released and the recovery rate was 95.2%. When the loading was reapplied, the behaviour remained elastic up to about 11.35 kips, at which time yielding became obvious. Failure occurred at 14.20 kips, which is 53% greater than the nominal capacity of the branch member.

As with Specimen 4, failure occurred through general yielding of the branch member. However, in this case the strain gauges gave some indication of what was occurring at the joint. At the low levels of loading, it was clear that the tension flange was accepting it's share of the load. This phenomenon was not observed in any of the previous tests in the series. The centre por-

tion of the flange was registering similar strains to the corners, indicating that there was no undue stress build up there.

This pattern was maintained until some yielding began to take place at about 500 kips ins., when the strain at the centre of the flange began to build up. As the loading was increased still further, the strains in the tension flange of the branch member at the top of the haunches became enormous, though the specimen was still accepting load. It was not until the strains in the second row of gauges (5" above the haunches) exceeded 0.5% that the specimen finally failed. At this point, the strains in the bottom gauges were in excess of 1.5%, indicating that the steel was well into the strain hardening range.

As with Specimen 4, the moment causing failure, in the position where it occurred, had a considerably shortened lever arm. The effective applied moment at the point of failure was

$$624 \times \frac{38.5}{44.0} = 546 \text{ kips ins.}$$

This indicates that the average stress across the whole cross section of the branch member at the point of fail-

ure was

$$546/9.15 = 67.0 \text{ k.s.i.}$$

Once again, this is in excess of the nominal capacity of the steel and reasons for this are suggested in the previous chapter.

This specimen is comparable to Specimen 4, though the chord thickness in 4 was 5/16", while in Specimen 14 the thickness was 1/4". One would expect the former specimen to be slightly stronger though the difference should not be too great, as failure took place in the branch member both times. The results bear this out as Specimen 14 had about 10% greater initial stiffness, while Specimen 4 had a 10% higher failure load.

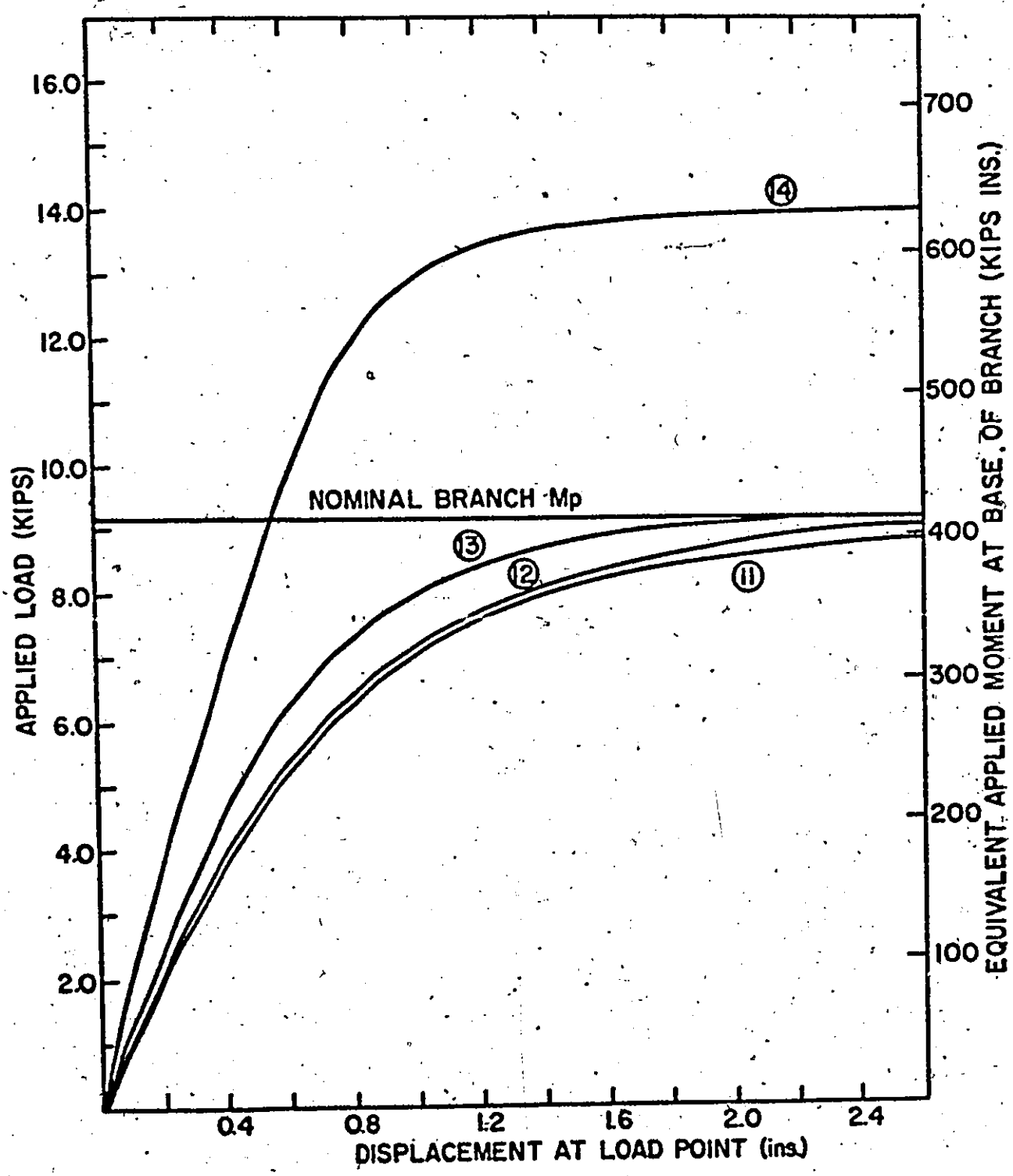

Fig. 4.1
Load-deflection Curves (Series B)

Fig. 4.2

Specimens 11 - 14 After Completion Of Testing

SERIES B. (SPECIMENS 11 - 14).

SPECIMEN NUMBER	BRANCH MEMBER	CHORD MEMBER	λ	b/t_c	PROBABLE JOINT WORKING MOMENT	% RECOVERY AT THIS LEVEL	FAILURE MOMENT	FAILURE MOMENT AS A PERCENTAGE OF BRANCH F.P.M.	FAILURE MODE
11.	5x5x.2500	6x6x.2500	0.833	20.0	155 k.ins.	92.8 %	402 k.ins.	99 %	Chord Flange Buckling
12.	5x5x.2500	6x6x.2500	0.833	20.0	155 k.ins.	94.2 %	419 k.ins.	103 %	Chord Flange Buckling
13.	5x5x.2500	6x6x.2500	0.833	20.0	155 k.ins.	94.0 %	416 k.ins.	102 %	Chord Flange Buckling
14.	5x5x.2500	6x6x.2500	0.833	20.0	223 k.ins.	95.2 %	624 k.ins.	153 %	Branch General Yield

TABLE 4.3

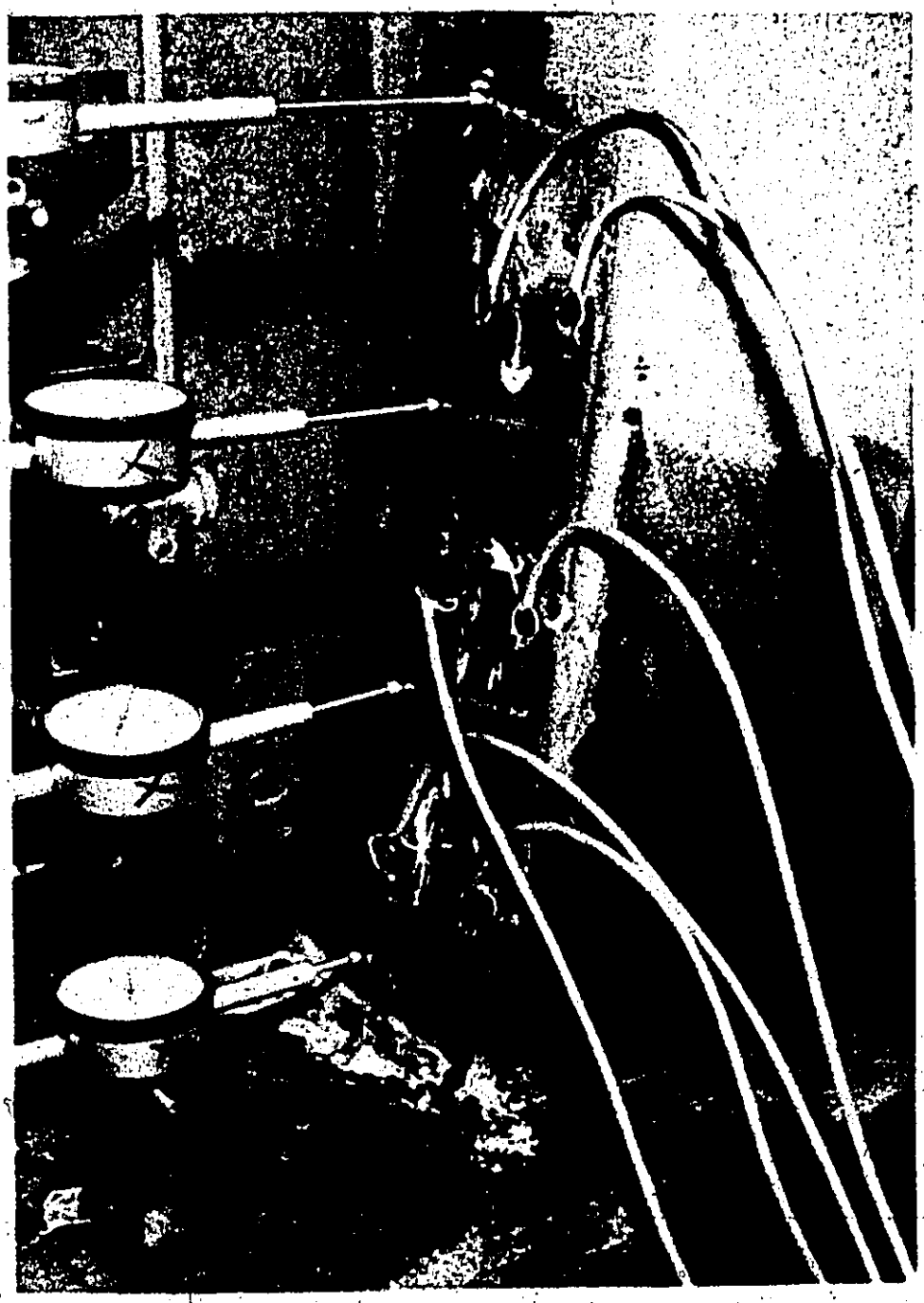

Fig. 4.4

Arrangement Of Strain And Dial Gauges

CHAPTER 5

TEST SERIES C

5.1 GENERAL DISCUSSION:

This was the second series tested and the feature common to this series is that all specimens have a γ value of 0.60. Each specimen had a 6" x 6" x 3/16" branch member, while each chord member was of 10" x 10" x 3/8" section. Specimens 5 and 6 were unreinforced. Specimens 7 and 8 had chord flange reinforcing plates. Specimen 9 had branch flange reinforcing plates and Specimen 10 had haunched reinforcement. All specimens had fillet welds, except Specimens 6 and 8 which had partial penetration groove welds.

As the same branch member was common to all the specimens, the theoretical working capacity of the branch member in bending is the same in all cases. As the section is a compact section, this amounted to a value of

$$0.66 \times 50 \times 7.94 = 262 \text{ kips ins.}$$

Using the empirical method previously used, the working capacity of the unreinforced joint would then be

$$262 \times (0.60)^2 = 94.4 \text{ kips ins.}$$

However, as the chord member thickness was 50% greater than in the specimens previously used, it was decided that a more realistic trial working load would be

$$94.4 + 50\% = 142 \text{ kips ins.}$$

This latter figure was employed for Specimens 5, 6 and 9, while the full branch member capacity was used for Specimens 7, 8 and 10. Load-deflection curves for the 6 specimens are shown in Fig. 5.1. These curves are plots of the applied load against the deflection of the branch member at the point of application of the load, which was 44 inches above the top flange of the chord member. As before, the deflections have been adjusted to allow for the displacement of the end plate and the rotation of the chord member.

A photograph of the six specimens, after completion of the tests, is shown in Fig. 5.2 and a tabular presentation of the results is shown in Table 5.3.

Six strain gauges were used on each of Specimens 6, 7, 8, 9 and 10. These gauges were positioned exactly as the gauges were in Series B. However, a different arrangement was used on Specimen 5. The basic strain

gauge pattern used throughout the tests had not yet been decided on and an exploratory pattern was used. This involved the use of three strain gauges on each flange of the branch member. All six gauges were placed a uniform 1" from the joint. On each flange, one gauge was placed on the centre line, while the other two were placed as close to the corners as possible. The idea behind this arrangement was to indicate the strain pattern that existed across the flanges, in close proximity to the joint.

5.1.a. SPECIMEN NO. 5:

This specimen was unreinforced at the joint. It was loaded incrementally up to 3.23 kips and some yielding was apparent at this level. The permanent set was then measured and it was found to have an 86.9% recovery factor. Loading was then resumed and the yielding increased quite rapidly. Failure occurred at a level of 10.15 kips. It is worth noting that the deflections, at this point, were greater than in any specimen observed up to this time. This failure moment corresponds to 96% of the capacity of the branch member.

As anticipated, failure was caused by buckling of the chord member's top flange. At no stage were any yield strains observed in the branch member. However, the strain pattern was of interest, in that it pointed out what was occurring around the joint. On the tension flange, the strains concentrated at the corners throughout the whole range of loading and strains at the centre never rose above 50% of the corner strains. On the compression flange, the strains were remarkably equal across the whole flange at the lower load levels. However, close to failure, the strains at the centre of the compression flange became much greater than those at it's corners.

5.1.b. SPECIMEN NO. 6:

This specimen was identical to the previous one, except for the fact that prepared welds were used in place of simple fillets. Loading was applied incrementally to a level of 3.23 kips and the load was then released. Some non-linearity was obvious at this stage and this was confirmed when a recovery of 86% was recorded. When the load was re-applied, yielding took place rapidly and failure

occurred at 11.12 kips; with an enormous 8" deflection at the top of the member. This failure moment is equivalent to 105% of the branch member's capacity. However, due to the enormous deflections involved, this figure is grossly inflated and should not be regarded as a workable estimate of the joint's capacity.

Failure occurred in the chord member and yield strains were only observed in the branch member, after enormous deflections had occurred. At the early stages of loading, the branch member's webs took most of the load, while the tension flange lagged significantly behind with only a small amount of strain close to it's corners. When the 8.40 kips level was reached, the webs were fully plastic. This can be deduced from the fact that the strain gauge readings indicated that only a minute amount of stress was being carried by the flanges, indicating that they were making almost zero moment contribution. Hence, the webs had to be in the fully plastic state in order to make up the difference. It was only at this stage that the tension flange began to accept a significant amount of loading.

The results for this specimen are remarkably close to those of Specimen 5. Specimen 5 had 8% greater initial

stiffness, while Specimen 6 had a 9% higher failure moment.

5.1.c. SPECIMEN 7:

This specimen was the first specimen tested with a chord member top flange reinforcing plate. In this case the plate was 3/8" thick, which effectively doubled the thickness of the chord member underneath the branch member. As this was considered to be a strong type of reinforcement, it was decided to load the specimen up to the full theoretical branch member working capacity before measuring the permanent set.

A small amount of non elastic behaviour was noted before this point was reached. However, a 89.5% recovery factor was recorded, when the load was released. The non-elastic behaviour became more pronounced as the load was increased, until failure occurred at 13.00 kips. This is equivalent to 123% of the branch member's nominal capacity.

The mode of failure was quite significant. Failure occurred in the branch member, about 1 1/2" above the level of the joint. This is important, because it illustrates that the 3/8" reinforcing plate is sufficient to resist web buckling in the chord member, when members of

this size are joined together. In addition, it should be noted, that the recorded deflection at the top of the member was a mere 1.45 inches. This is only a fraction of the deflections observed in the previous two tests.

From examination of the strain gauge readings, it is apparent that the pattern is similar to that observed in the previous two tests. At the early stages of loading, the webs of the branch member were carrying most of the loading and this pattern was maintained throughout the test. However, the differential was not as pronounced as in the previous two tests. In addition, the distribution of strain across the tension flange showed that the differential, between the centre and the corners, was not as pronounced either.

5.1.d. SPECIMEN 8:

This specimen was identical to Specimen 7, except that partial penetration groove welds were used instead of simple fillet welds. However, as will be seen from the results obtained, there was a considerable difference in the performance.

This specimen was loaded incrementally to a level of 5.95 kips. Non elastic behaviour was very obvious at this stage and a recovery factor of only 80.9% was recorded, when the load was released. Loading was then resumed and failure took place at 12.10 kips. This is equivalent to 115% of the nominal capacity of the branch member. However, it is worth noting that this load caused a much larger deflection than the same load caused in the previous specimen.

The strains recorded in the base of the branch member followed almost the same pattern as Specimen 7, which indicates that the base plate does cause the joint to behave more efficiently. However, failure in this case occurred by web buckling in the chord member and some buckling was also obvious in the base plate. Failure occurred at a point, which was 7% lower than for the previous specimen and the previous specimen exhibited 60% greater initial stiffness.

Thus, there is obviously an inconsistency in the results obtained, as such differences could not be attributable to the difference in the types of welds used. The behaviour of Specimen 8 was closer to that of an un-

reinforced specimen than to that of Specimen 7. Hence, it was suspected that the strengthening plate used was not of the 3/8" thickness specified. In fact, the performance of the specimen was consistent with the use of a 1/4" plate.

Unfortunately, it was not possible to verify this fact, as the specimen had been scrapped when the magnitude of the inconsistency was noticed. Strenuous efforts were made to locate the joint for examination, but they ended in failure. The possibility of obtaining a new specimen was then looked into, but this was found not to be a practical proposition. However, the author strongly feels that the results for Specimen 7 are representative of the performance to be expected from these specimens, when fabricated according to the correct specifications.

5.1.e. SPECIMEN 9:

This specimen had branch flange reinforcing plates. Based on previous experience, it was decided to load this specimen to the same level as the unreinforced ones, before measuring permanent set. No non-linear behaviour was obvious, up to this stage, and a 94.7% recovery factor was

noted. Yielding began to occur at 4.55 kips and this progressed rapidly, until failure occurred at 11.80 kips. Failure occurred through tension failure of the reinforcing plate. This was the first and only specimen which exhibited this failure mode. This failure level corresponds to 111% of the nominal capacity of the branch member alone.

The strain gauges indicated that the branch member's webs took most of the load throughout the range of loading. The branch member's tension flange did not take any significant loading, until the higher moment levels were reached. However, at all stages of loading the strains in the reinforcing plate tended to concentrate at the outer edges.

In contrast to Series A and B, the performance of this specimen was significantly better than that of the unreinforced specimens in the series. It would seem, that the high λ value in the earlier series did not permit this type of reinforcing plate to operate efficiently. Whereas in this series, it was able to spread some of the loading and consequently it's performance greatly improved. However, it was not as efficient as Specimens 7 and 10.

5.1.f. SPECIMEN 10:

This was the only specimen in the group with haunched reinforcement and, based on previous experience, it was anticipated that this specimen would show the best results. However, measurement of the effect of the decreased λ value on the efficiency of this type of connection was of vital importance.

This specimen was loaded incrementally to 5.96 kips and no yielding was observable at this level. When the load was released, a 91.5% recovery factor was recorded. Loading was then resumed and yielding began to occur at about 7.96 kips and failure took place at 14.60 kips. This corresponds to 138% of the branch member capacity and failure occurred through general yielding of the branch member.

At the early stages of loading, it was obvious that the flanges of the branch member were accepting their share of the loading. In addition, the distribution of strain across the tension flange was remarkably equal, with no build up at the corners. At 80% of the failure moment, yield strains were observed in the tension flange, 1" above the haunches and at 92% of the

failure moment, yield strains were observed 5" above the haunches. At failure, yield strains were observed 9" above the haunches. The decrease in λ value greatly reduced the advantage of this type of connection over the other methods and it's structural performance was marginally worse than the chord member top flange plate. This is illustrated by the fact that though it's failure moment was 12% higher, it's initial stiffness was 7% lower than Specimen 7.

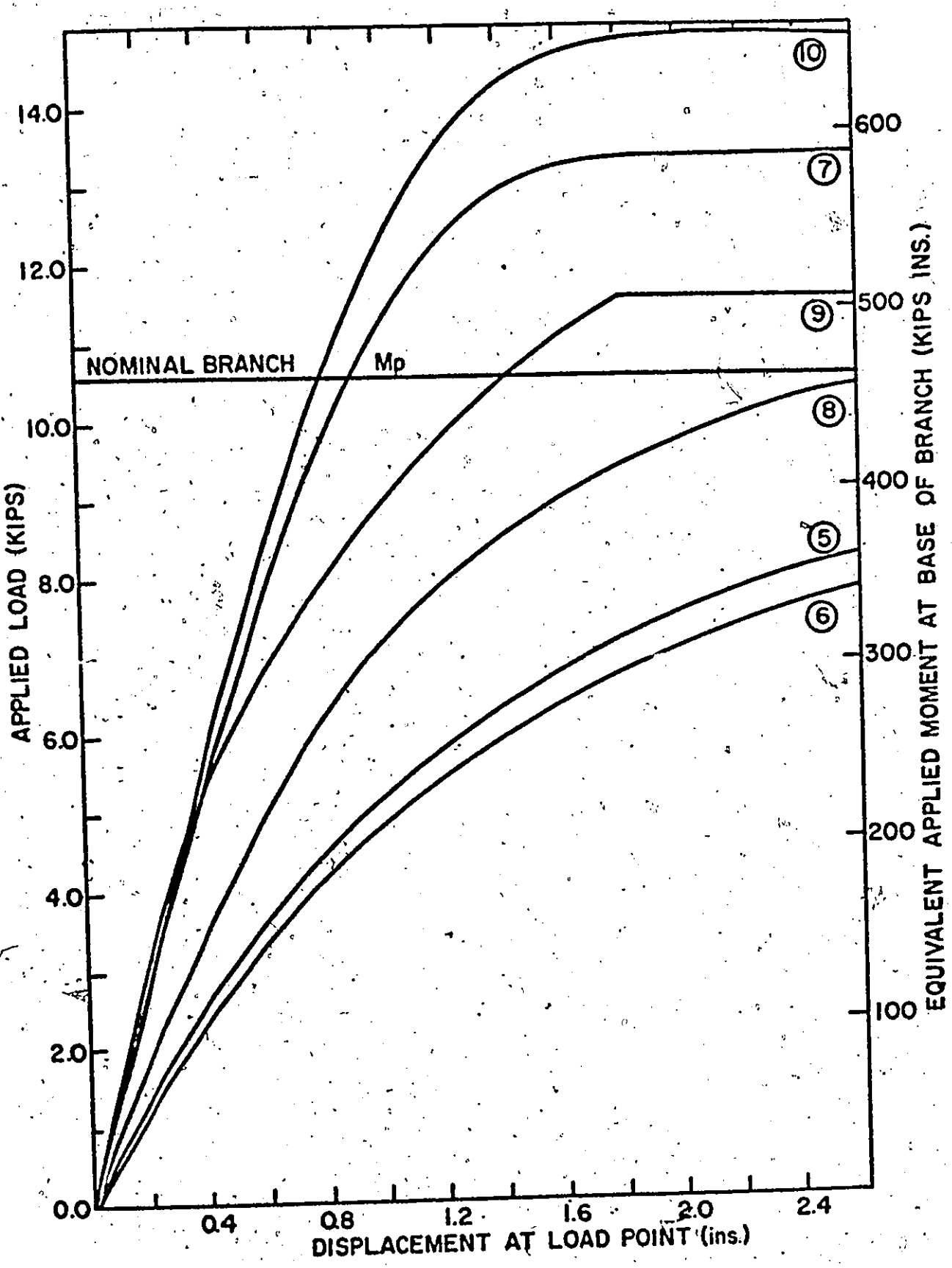

Fig. 5.1

Load-deflection Curves (Series C)

Fig. 5.2

Specimens 5 - 10 After Completion of Testing

SERIES C. (SPECIMENS 5 - 10)

SPECIMEN NUMBER	BRANCH MEMBER	CHORD MEMBER	γ	b/t_c	PROBABLE JOINT WORKING MOMENT	% RECOVERY AT THIS LEVEL	FAILURE MOMENT	FAILURE MOMENT AS A PERCENTAGE OF BRANCH P.P.H.	FAILURE MODE
5.	6x6x.1880	10x10x.3750	0.60	16.0	142 k.ins.	86.9 %	447 k.ins.	96 %	Chord Flange Buckling
6.	6x6x.1880	10x10x.3750	0.60	16.0	142 k.ins.	86.0 %	490 k.ins.	105 %	Chord Flange Buckling
7.	6x6x.1880	10x10x.3750	0.60	16.0	262 k.ins.	89.5 %	572 k.ins.	123 %	Branch Local Yield
8.	6x6x.1880	10x10x.3750	0.60	16.0	262 k.ins.	80.9 %	533 k.ins.	115 %	Chord Flange Buckling
9.	6x6x.1880	10x10x.3750	0.60	16.0	141 k.ins.	94.7 %	519 k.ins.	112 %	Tension Failure in Plate
10.	6x6x.1880	10x10x.3750	0.60	16.0	262 k.ins.	91.5 %	641 k.ins.	138 %	Branch General Yield

TABLE 5.3

CHAPTER 6

JOINT STIFFNESS PARAMETERS

6.1. M-ϕ CURVES

As described in Chapter 3, the results for relative rotation of the branch member were unsatisfactory when dial gauges alone were used. The use of strain gauges, in conjunction with the dial gauges, enabled more accurate results to be obtained in Series B and C.

The method used to calculate the relative rotation of the joint is as follows. It is known that the difference in the rotations, at two points on a member, is equal to the integral of curvature between the two points.

$$\text{i.e. } \phi_2 - \phi_1 = \int_1^2 K dx \qquad (6.1)$$

However, the curvature at any point along the centre line of the member is equal to the strain at a particular fibre divided by it's distance from the neutral axis. In our case, the strain gauges were positioned on the tension flange of the branch member.

$$\therefore \quad K = \frac{2\epsilon_m}{b} \qquad (6.2)$$

where b is the depth of the branch member.

From (6.1) it follows that

$$\phi_2 - \phi_1 = \int_1^2 \frac{2\epsilon_x}{b}\, dx \quad - (6.3)$$

The value of ϕ_2 can be obtained from the corrected dial gauge readings. The reason corrected dial gauge readings are used, is to give a value for the relative rotation at point 2 and not the gross rotation, which can be measured directly from the dial gauges. The corrected readings allow for both the rotation of the chord member and the overall displacement of the test rig.

The integral can be evaluated by numerical integration of the strain gauge readings between point 2 and the base of the member. ϕ_1 can then be solved to give the relative rotation at the base of the branch member. A diagram clarifying this proceedure is shown in Fig. 6.1. This procedure is repeated for each load increment and the specimen's M-ϕ curve can then be plotted.

The results for test Series B are shown in Fig. 6.2. These results are very much as predicted, with Specimen 14 showing considerably greater stiffness than the other three specimens. Specimen 13, which had branch

member flange plates, showed only slightly better performance than the unreinforced Specimens 11 and 12. This shows close agreement with the load-deflection curves for the same specimens, as shown in Fig. 4.1. It is worth noting that the M-ϕ curves indicate that in all cases the specimens' behaviour is fairly elastic up to the full branch member working load.

The results for test Series C are shown in Fig. 6.3. These results are substantially in agreement with the load-deflection results shown in Fig. 5.1. However, there are some prominent features which differ. It is obvious that Specimen 10 is more flexible than either Specimens 7 or 9, in the working range. Specimen 9 exhibits greater stiffness than Specimen 7 at low load levels, but at working load both are almost equally stiff. These results serve to indicate that the connection with the chord flange reinforcing plate can be more efficient than the haunched connection, when the λ value is 0.60.

6.2. DEFLECTION CRITERIA:

In the design of Vierendeel Trusses, Loo [2] has pointed out that deflection criteria may be at least as

important to the designer as are strength considerations. With unequal width connections in hollow sections, it is difficult to achieve full rigidity at the joints and consequently the truss must usually be designed on the basis that all connections are semi rigid. The total angles of rotation of a semi rigid connected member ab, subjected to couples M_a and M_b are,

$$\theta_a = \frac{M_a L}{3EI} - \frac{M_b L}{6EI} + \frac{M_a}{J}$$

and $$\theta_b = \frac{-M_a L}{6EI} + \frac{M_b L}{3EI} + \frac{M_b}{J}$$

where J is the joint modulus.

Thus the joint modulus J, or rotational spring constant, is a very important joint property. Mathematically speaking, it is the applied moment M divided by the relative rotation (ϕ) of the connection, when behaviour is elastic, i.e. M/ϕ. The joint modulus is usually measured in kips ins. per radian.

In his research, Loo[3] analysed a Vierendeel Truss and plotted the midspan deflection for various J values at the joints. The truss used was an eight panel Vierendeel truss with panel point loading, eight foot high and with a 64 ft. span. The chord members were 8" x

8" x .2500 HSS, while the webs were 4" x 4" x .2500 HSS and the λ value at each joint was 0.50. The resultant curves are shown in Fig. 6.4,

The results of Loo's research are not directly applicable to this research programme. This is because the member sizes do not correspond in any way. However, Loo's results do indicate at what J value the deflections became critical. From Fig. 6.4, it is apparent that for J values in excess of about 1×10^5 kips ins./radian, the connection behaviour is almost fully rigid. Below this level, deflections increase rapidly and are about 50% greater when $J = 1 \times 10^4$ kips ins./radian.

The J values for the specimens, tested in Series B and C, are shown in Table 6.5. As some of the M-ϕ plots showed some non-linearity prior to achieving the working moment, these J values have been calculated at the working load level.

The third series of results quoted (Specimens 2a, 3a, 4a, 5a and 7a) were tested by Wardenier [6] at Delft. Though he did not show J values in his research paper, the J values have been calculated from his M-ϕ curves.

The results for Series B show that Specimens 11,

12 and 13 have similar J values. Specimen 14 has a J value which is about four times greater than the other three, indicating the superior performance of the haunched reinforcement. This value of 1.95×10^5 kips ins./radian is quite high and for all practical purposes, the connection could possibly be considered to be fully rigid.

However, the haunched connection in Series C does not fare so well, due to the specimen's decreased λ value. It can readily be seen that specimens 7 and 9 are stiffer than the haunched Specimen 10. However, none of the specimens in this series are sufficiently stiff to be considered fully rigid and when used in a truss, they must be considered semi-rigid.

In the results of the Delft tests shown, Specimens 4a, 5a and 7a have equal width connections ($\lambda = 1.0$) and are not directly comparable to any of the tests in this programme. However, the J values for these specimens are all well in excess of 1×10^5 kips ins./radian. Jubb and Redwood [1] have stated, that from the very limited experimental evidence available to them, that it appears that an unreinforced equal width joint will behave in an approximately rigid manner. In light of Loo's findings

and this experimental evidence from Delft, it would seem that this point is now confirmed.

In the results of the Delft tests, only Specimens 2a and 3a are directly comparable to the tests in this programme. Wardenier's Specimen 2a is comparable to Specimen 6 and his Specimen 3a is comparable to Specimens 7, 9 and 10.

Specimens 2a and 6 both have unreinforced joints and λ values of 0.625 and 0.600 respectively. The b/tc ratios also vary slightly, with Specimen 2a's being 14.5 and Specimen 6's being 16.0. One would expect the J values of the two specimens to be quite close and the results confirm this. Specimen 2a has a J value of 7.7×10^3 kips ins./radian and Specimen 6's value was 9.2×10^3 kips ins./radian. These results indicate essential agreement between these two tests, though the chief conclusion, which must be drawn from both tests, is that both joint stiffnesses are inadequate.

The same λ and b/tc similarities apply to the comparison between Specimen 3a and Specimens 7, 9, and 10. The only variable parameter is the type of joint reinforcement used. The results show that the Delft Specimen 3a

has a J value, which is more than double those of Specimens 7, 9, and 10. This indicates that the reinforcing method employed must be considerably more structurally efficient than those employed in this research programme.

One of the primary objectives of this study was to examine reinforcing methods, which are aesthetically pleasing as well as being structurally efficient. The method of reinforcement used for the Delft Specimen 3a is unfortunately not likely to be acceptable on aesthetic grounds.

However, the structural efficiency of this connection deserves notice and it could perhaps have applications in non-exposed construction or in beam-column joints.

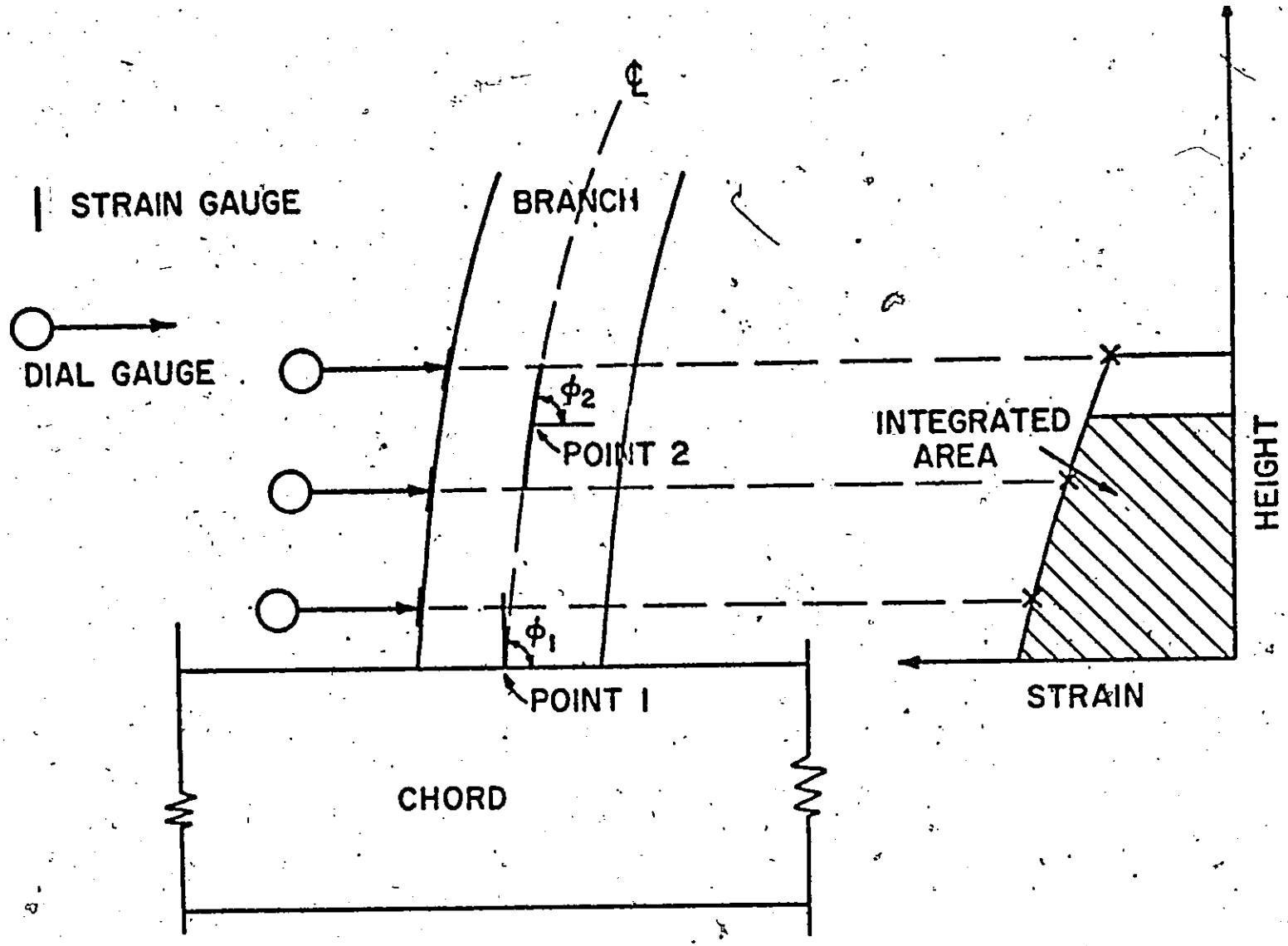

Fig. 6.1
Explanation of Curvature Calculation

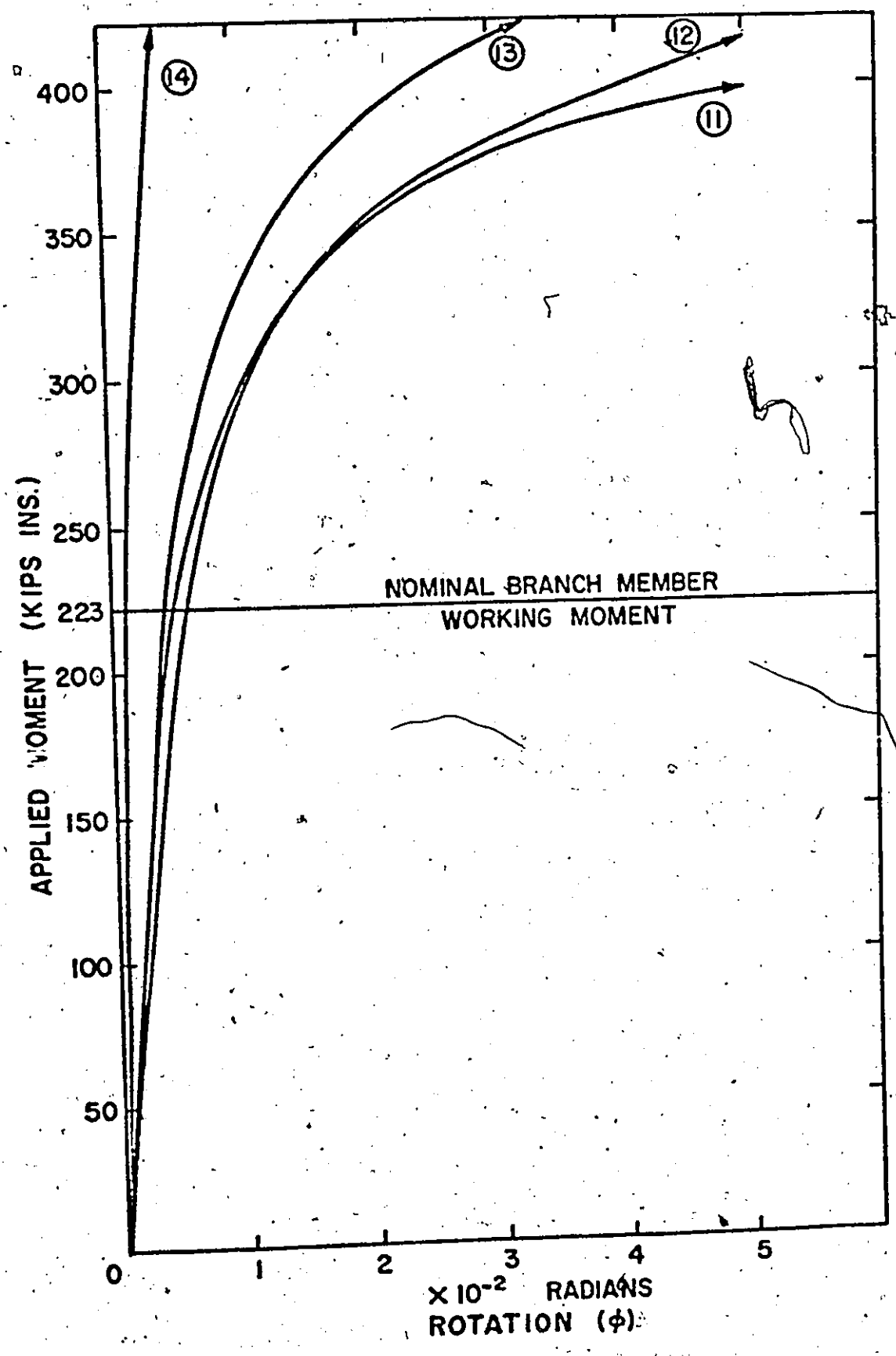

FIG 6.2
MOMENT-ROTATION CURVES (SERIES B)

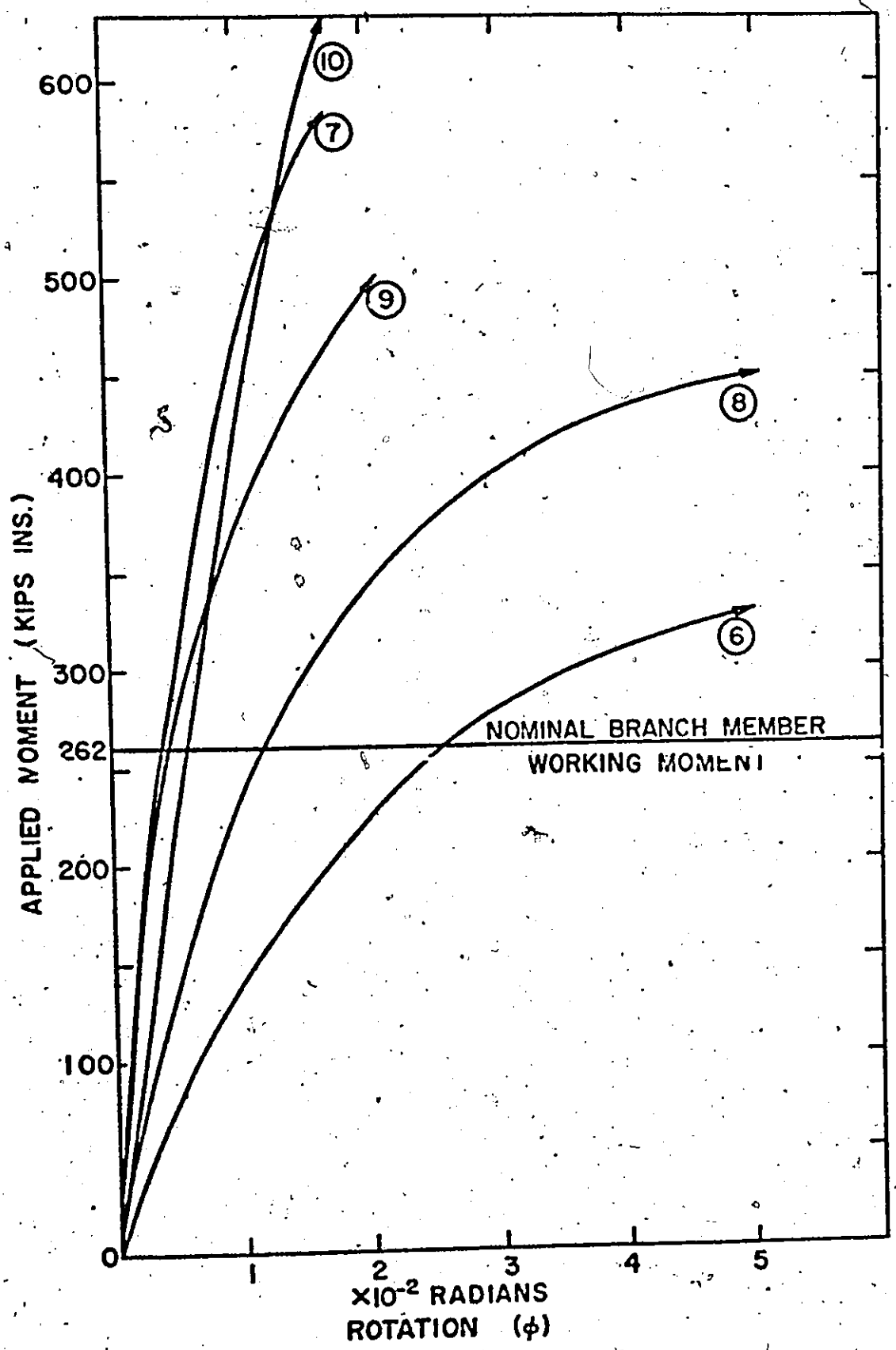

FIG. 6.3
MOMENT-ROTATION CURVES (SERIES C)

Fig. 6.4 Plot of δ vs J For an 8 Bay Vierendeel Truss.

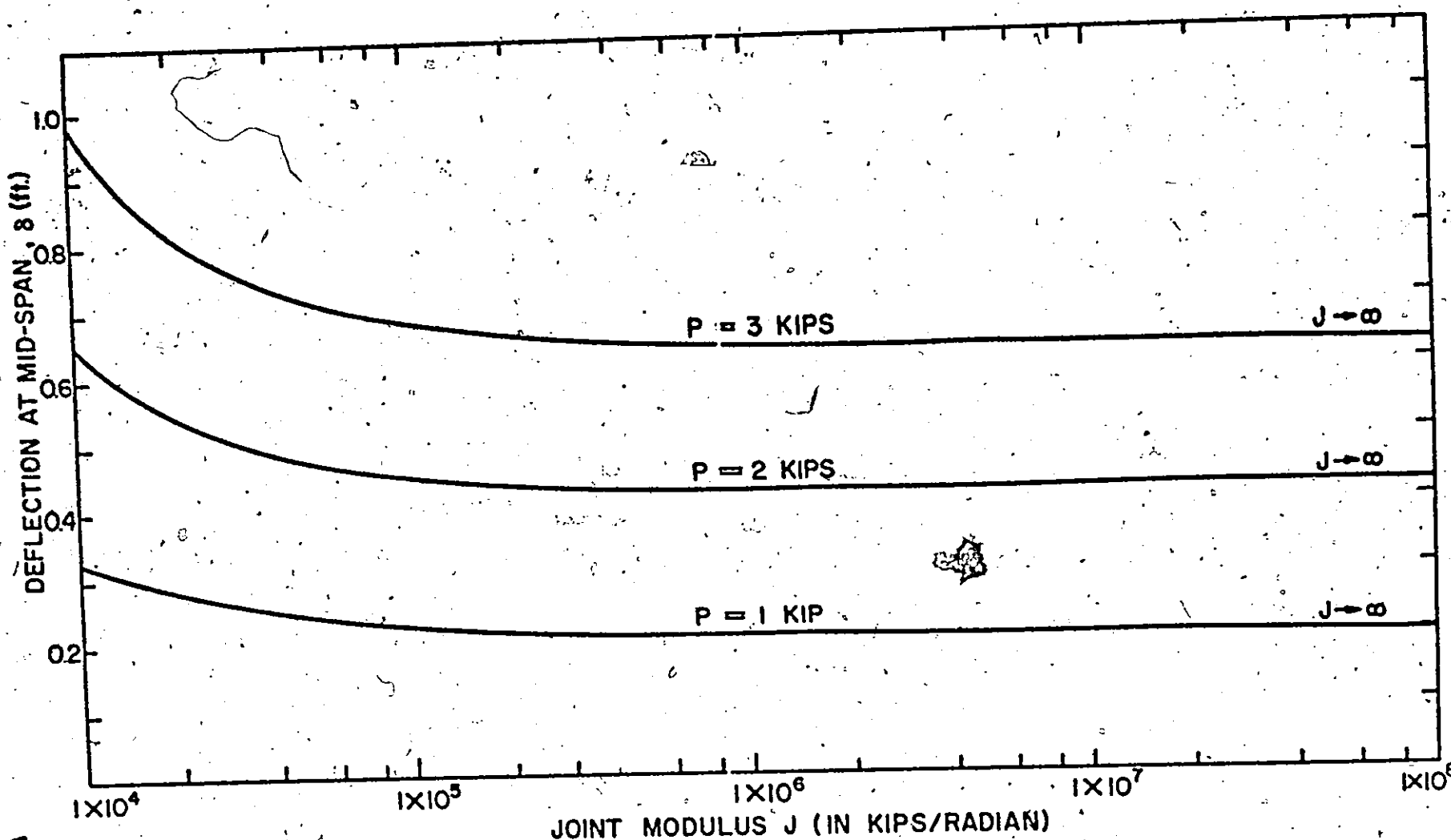

SPECIMEN NUMBER	BRANCH MEMBER	CHORD MEMBER	λ	b_1/t_c	STRENGTHENING DEVICE (SEE CHAPTER 1)	JOINT MODULUS (kips ins./radian)
SERIES C						
6	6x6x.1880	10x10x.3750	0.600	16.0	NONE	9.20×10^3
7	6x6x.1880	10x10x.3750	0.600	16.0	CHORD FLANGE PLATE	6.39×10^4
8	6x6x.1880	10x10x.3750	0.600	16.0	CHORD FLANGE PLATE	2.18×10^4
9	6x6x.1880	10x10x.3750	0.600	16.0	BRANCH FLANGE PLATES	6.24×10^4
10	6x6x.1880	10x10x.3750	0.600	16.0	HAUNCHES	4.37×10^4
SERIES B						
11	5x5x.2500	6x6x.2500	0.833	20.0	NONE	4.65×10^4
12	5x5x.2500	6x6x.2500	0.833	20.0	NONE	3.81×10^4
13	5x5x.2500	6x6x.2500	0.833	20.0	BRANCH FLANGE PLATES	5.58×10^4
14	5x5x.2500	6x6x.2500	0.833	20.0	HAUNCHES	1.95×10^5
DELFT TESTS						
2a	5x5x.2500	8x8x.3440	0.625	14.5	NONE	7.70×10^3
3a	5x5x.2500	8x8x.3440	0.625	14.5	BRANCH WEB PLATES	1.30×10^5
4a	8x8x.3440	8x8x.3440	1.000	23.2	NONE	1.45×10^5
5a	8x8x.3120	8x8x.3120	1.000	25.6	NONE	1.77×10^5
7a	5x5x.2500	5x5x.2500	1.000	20.0	NONE	2.60×10^5

TABLE 6.5
Joint Modulus Values

CHAPTER 7

SUMMARY & CONCLUSIONS

All fourteen specimens tested in this research programme had unequal width connections. All were subjected to incremental static loading, until failure took place, and a variety of measurements were recorded for each increment of loading. At a certain stage in each loading sequence the load was released and the permanent set measured.

Each specimen comprised a 7 ft. long chord member joined to a 4 ft. long branch member. Some specimens had unreinforced connections, though the majority of connections were reinforced. Three types of reinforced connections were tested, to evaluate their performance for two distinct λ values. Upon completion of each test coupons were cut from each branch and chord member. Tensile tests were then performed and the results were tabulated.

Load-deflection curves were plotted for all specimens and moment-rotation curves were drawn for the final

nine (Specimens 6 to 14). Joint modulus values for each connection were calculated and comparisons were made, with the results obtained by Wardenier.[6]

The following are the chief conclusions which can be drawn from this research programme.

(1) UNREINFORCED CONNECTIONS:

Based on the work of Cute et al.[5] and Wardenier[6] it can be postulated that equal width unreinforced connections can be considered to be fully rigid. This is not true for unreinforced unequal width connections. The joint modulus values calculated, in this research programme, indicate that such connections are semi rigid. For high λ values, the departure from full rigidity is not too great, but when $\lambda = 0.60$ the connection is very flexible. In addition, as λ decreases, it becomes increasingly difficult for this connection type to sustain the full branch member moment capacity. Thus, it is obvious that some type of reinforcement is required, if unequal width connections are to have any applications.

(2) HAUNCHED CONNECTIONS (TYPE 3):

In Series A and B ($\lambda = 0.833$) of the tests, the haunched connection's performance was excellent. In both

cases, the haunches stiffened the connection sufficiently to allow the branch member to resist moments in excess of it's rated capacity. The connection, in both cases, behaved in a fully rigid manner.

In Series C ($\lambda = 0.60$), the results were not quite as satisfactory. Though the connection enabled the joint to develop the full branch member capacity, the joint behaviour was semi-rigid and the two other types of reinforced connections, tested in this series, behaved more efficiently in the working range.

The concept of a haunched connection is a good one, as it shortens the effective lever arm on the branch member and produces a more balanced strain distribution at the base of the branch member. In Series C, the main reason for the inferior performance of the haunched connection tested was, that the haunches used were offcuts of the same size as the branch member. When λ decreases, these haunches have not got the ability to transfer load to the chord member's webs and consequently, a large part of the load is applied to the chord member's top flange. For connections where λ is small, it would be necessary to devise a more elaborate type of haunch

in order to utilise the inherent advantages offered. However, the costs of such a connection might be prohibitive.

(3) BRANCH MEMBER FLANGE REINFORCING PLATES (TYPE 1):

The primary purpose of these reinforcing plates is to distribute some of the loading, induced by the branch member, directly to the webs of the chord member. The secondary function was to add some extra stiffness to the base of the branch member.

For high λ values ($\lambda = 0.83$), their performance was disappointing, as it was impossible to utilise their primary function and the joint performance was only marginally better than the series' unreinforced connections. This was due to the geometry of the joint, which permitted the branch member's webs to transfer most of the load to the chord member's webs, without the assistance of these plates. The reason that the connection performed better than the series' unreinforced specimens was due to the extra stiffness induced at the base of the branch member and not because of any load spreading action.

In Series C ($\lambda = 0.60$), the plates were able to perform their primary function of spreading the load and the results obtained are much better than those of the

series unreinforced specimens. The initial stiffness of the specimen, reinforced in this manner, was greater than for any other of the series specimens and the J value at working load was in the same range as the series best specimen. The joint reached the full branch member capacity, though failure occurred through tension failure in the reinforcing plate. It is therefore reasonable to assume that if the reinforcing plates had been thicker, this reinforcement type might have exhibited even greater properties. However, in all cases the behaviour of this joint type was semi rigid.

(4) CHORD MEMBER TOP FLANGE REINFORCING PLATE (TYPE 2):

Due to welding difficulties, it was impossible to test this type of connection in either Series A or B ($\lambda = 0.833$). This was due to the fact that there was insufficient space to weld the branch member to the plate and the plate to the chord member effectively.

However, in Series C, it was possible to evaluate the performance of these connections and it was found to be Series C's most efficient joint. The J value calculated was the highest in the series and it's initial stiffness and failure moment were quite satisfactory.

For smaller λ values, it would seem that this type of connection shows the most promise. The chief disadvantage of this type of connection is that it is semi-rigid, though a fully rigid aesthetically pleasing connection has not yet been established for low λ values.

(5) WELD TYPES:

Two types of welds were employed in this test series; fillet welds and partial penetration groove welds. These weld types were used on similar specimens and the results examined. It was found that there was no structural advantage whatsoever, in the use of prepared welds and the increased costs involved in using them could not be justified. Thus, the chief factors, determining the performance of any joint are the geometry of the members and the connecting device, and not the method of jointing.

(6) IMPORTANCE OF λ AND t_c AS JOINT PARAMETERS:

From the results obtained, there is overwhelming evidence to show that the chief features determining the performance of any joint (reinforced or unreinforced), are the branch member width to chord member width ratio (λ) and the wall thickness of the chord member (t_c). In

the design of Vierendeel trusses, it is necessary to bear in mind that the size of chord member used can be critical. While large sized members with small wall thicknesses may seem to offer greater economy in bending and compression, this may not be so. The use of a smaller member with a thicker wall will enable the joints to behave more rigidly and the overall effect caused by this may enable much greater economies to be made.

CHAPTER 8

SUGGESTIONS FOR FUTURE RESEARCH

In Phase II of the programme there is a need both to consolidate our knowledge concerning the joining methods used in the first phase and to explore some new alternatives.

Preliminary design curves are shown in Fig. 8.1. With the exception of the haunched specimens with high λ values all specimens performed in a semi rigid manner. While fully rigid behaviour is desirable when deflections are critical, it would still be useful to confirm these preliminary design curves. Thus tests would be useful if performed on Type 2 and 3 connections with λ values of 0.50 and 0.70. This would effectively fill in the gaps on the design curves and allow accurate assessments to be made.

In the quest for a fully rigid connection at low λ values, two new haunch types seem to show promise. These are the truncated pyramid haunch and the chord member offcut haunch which are shown in Fig. 8.2. While

both are likely to be expensive. There is a possibility that they may behave in a fully rigid manner at low β values due to the fact that they would transmit the branch member forces directly into the webs of the chord member and avoid the possibility of buckling in its top flange.

Finally, two other areas in which further research may be useful are larger size HSS and cyclic loading. There is a considerable amount of interest currently in large size HSS and some tests using 12"x12" chords would be of value. It would also be interesting to perform some working range cyclic load tests on the welds prior to the destructive testing.

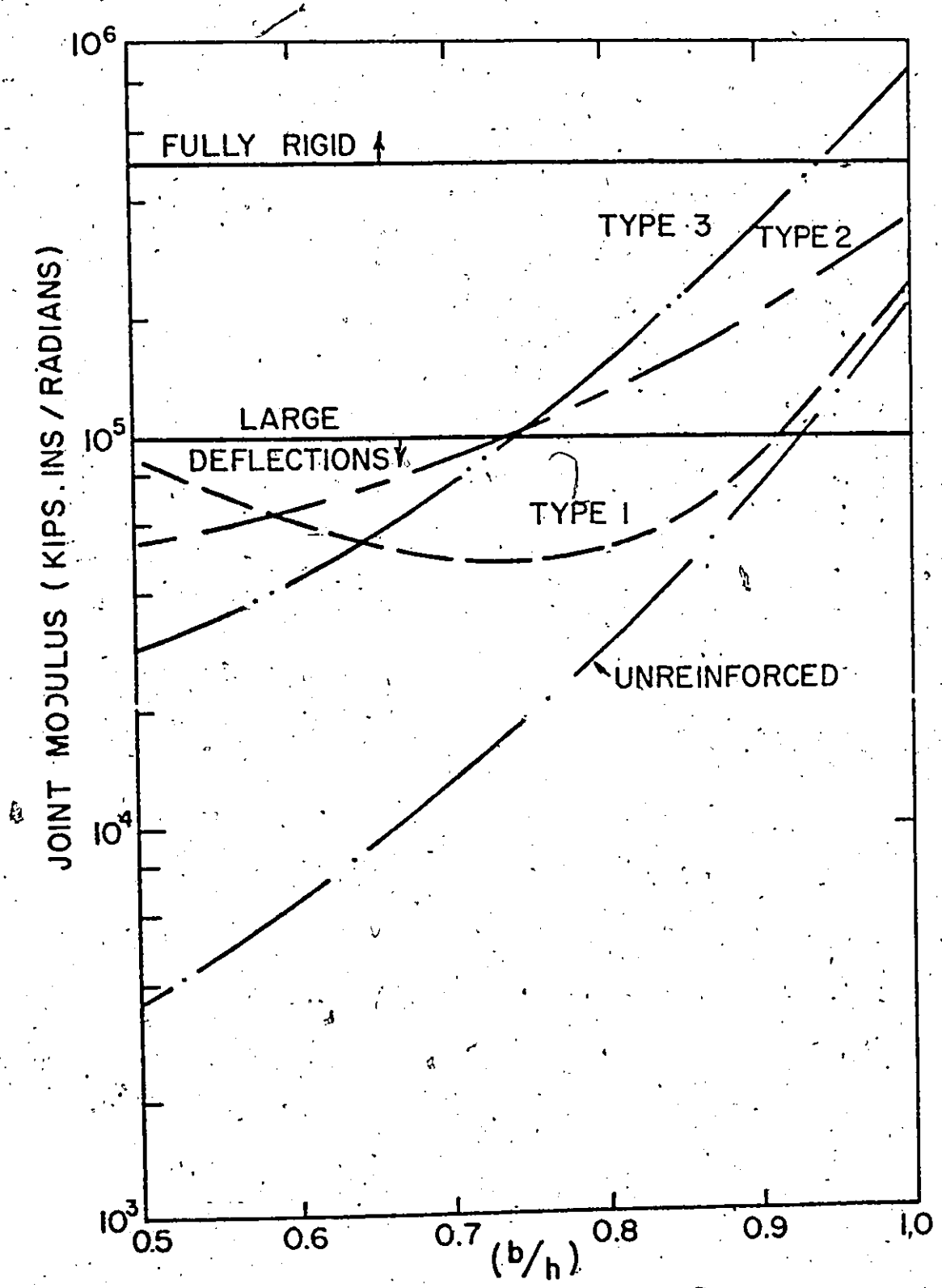

FIG 8.1
PRELIMINARY DESIGN CURVES

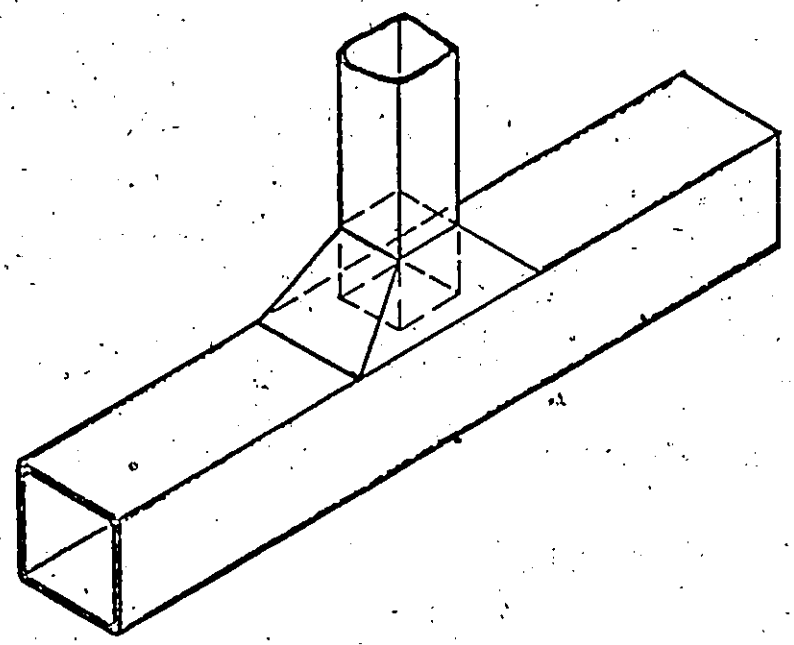

TRUNCATED PYRAMID CONNECTOR

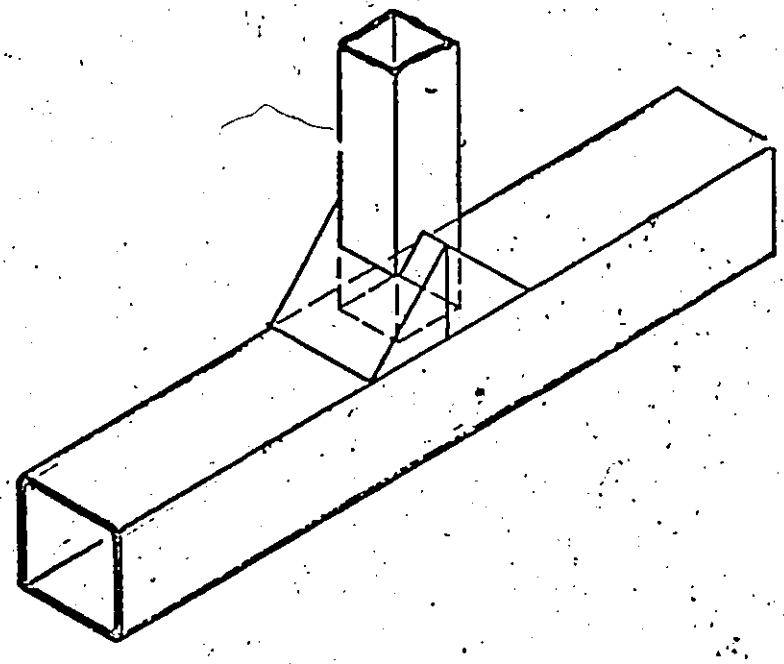

CHORD OFFCUT HAUNCH CONNECTOR

FIG 8.2
PROPOSED NEW HAUNCH TYPES

APPENDIX I

NOMENCLATURE

b	Width of Square HSS Branch Member
E	Elastic Modulus of Steel
h	Width of Square HSS Chord Member
I	Moment of Inertia
J	Joint Modulus
K	Curvature
L	Span Length of Beam
M	Applied Bending Moment
M_a	Applied Bending Moment at A
M_b	Applied Bending Moment at B
M_p	Fully Plastic Moment of Section
t_c	Thickness of Chord Member
Z	Plastic Section Modulus
a	Total Angle of Rotation at A
b	Total Angle of Rotation at B
ϕ	Relative Rotation Between Two Members at Joint
ϕ_1	Rotation at Point 1
ϕ_2	Rotation at Point 2
σ_y	Yield Stress
λ	Width Ratio (b/h)

APPENDIX II

REFERENCES

1) JEM Jubb and R. G. Redwood. "Design of Joints to Box Sections". Institution of Structural Engineers, Conference 1966 - "Industrialised Building and the Structural Engineer.

2) Benjamin E. Lazar and Pen J. Eang. "T Type Moment Connections between Rectangular Tubular Sections". Sir George Williams University, Faculty of Engineering, Montreal, Canada.

3) Yong King Loo. "Moment Connections for Cierendeel Trusses of Square Hollow Structural Sections" - Masters Thesis, McMaster University 1973.

4) "Joint Tests on Tuberights Pedestrian Bridge". Stewarts and Lloyds Ltd. Report No. C/E.65/23, 25th October 1966.

5) Cute D., Camo S. and Rumpf J. L. "Welded Connections for Square and Rectangular Structural Steel Tubing". Research Report 292-10, Drexel Institute of Technology, Philadelphia, November 1968.

6) J. Wardenier. "Research on T-shaped Rectangular Tube Connections to establish the M- and F-characteristics as well as the fatigue behaviour". Stenvin Laboratories, Delft. Report 6-72-11 April 1972.

7) "Canadian Structural Design Manual 1970 - Supplement No. 4 to the National Building Code of Canada". Issued by the Associate Committee on the National Building Code. National Research Council of Canada, Ottawa.

8) ASTM Annual Standards 1972 Part 31, Section E8 - "Standard Methods Of Tensile Testing Metallic Materials".